| Dist | COUNTY | ROUTE | POST MILES TOTAL PROJECT | SHEET No. | TOTAL SHEETS |
|---|---|---|---|---|---|
| 01 | Hum | 101 | 109.5/R125.8 | 1 | 100 |

STATE OF CALIFORNIA

# DEPARTMENT OF TRANSPORTATION

ACNH-Q101(303)E

## PROJECT PLANS FOR CONSTRUCTION ON

# STATE HIGHWAY

## IN HUMBOLDT COUNTY

## IN AND NEAR ORICK

## FROM 0.3 MILE NORTH OF BIG LAGOON BRIDGE

## TO 0.3 MILE SOUTH OF PRAIRIE CREEK UNDERCROSSING

TO BE SUPPLEMENTED BY STANDARD PLANS DATED 2010

### INDEX OF PLANS


| SHEET No. | DESCRIPTION |
|---|---|
| 1 | TITLE AND LOCATION MAP |
| 2-3 | TYPICAL CROSS SECTIONS |
| 4-13 | CONSTRUCTION DETAILS |
| 14 | DRAINAGE DETAILS |
| 15 | CONSTRUCTION AREA SIGNS |
| 16 | TRAFFIC HANDLING PLAN |
| 17 | TRAFFIC HANDLING DETAILS AND QUANTITIES |
| 18 | PAVEMENT DELINEATION DETAILS |
| 19-23 | PAVEMENT DELINEATION QUANTITIES |
| 24-30 | SIGN QUANTITIES |
| 31-37 | SUMMARY OF QUANTITIES |
| 38-42 | ELECTRICAL SYSTEMS PLANS |
| 43-100 | REVISED AND NEW STANDARD PLANS |


THE STANDARD PLANS LIST APPLICABLE TO THIS CONTRACT IS INCLUDED IN THE NOTICE TO BIDDERS AND SPECIAL PROVISIONS BOOK.

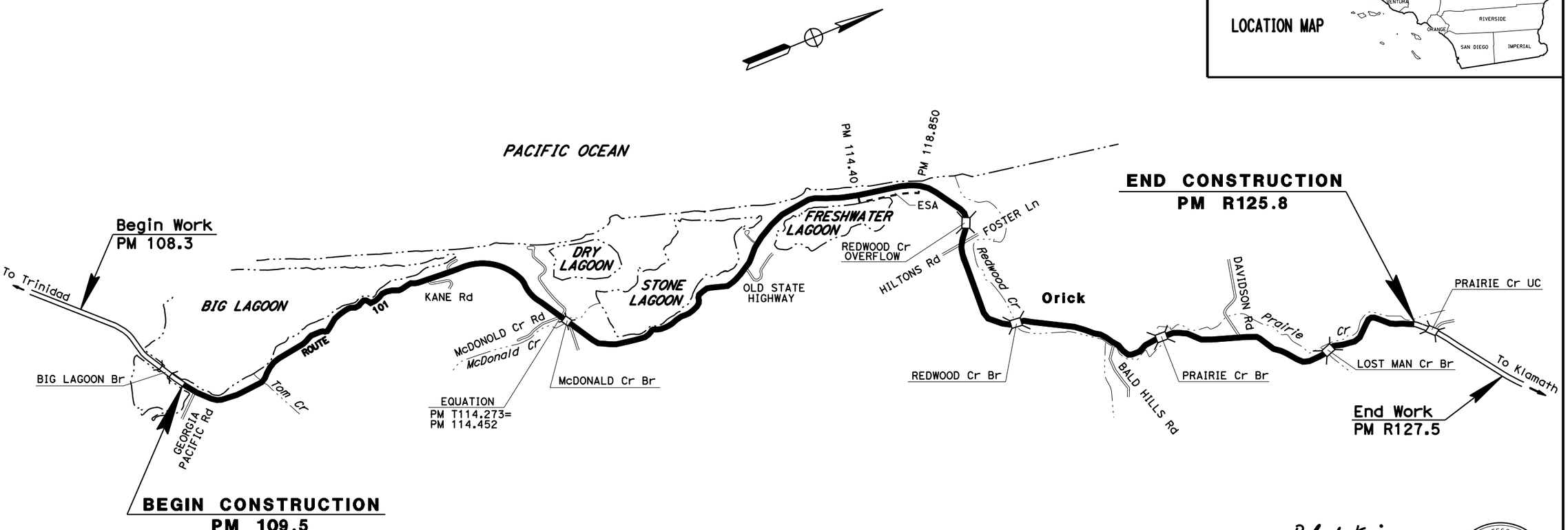


NO SCALE

THE CONTRACTOR SHALL POSSESS THE CLASS (OR CLASSES) OF LICENSE AS SPECIFIED IN THE "NOTICE TO BIDDERS."

Robert King 05-23-16
PROJECT ENGINEER DATE
REGISTERED CIVIL ENGINEER

May 23, 2016
PLANS APPROVAL DATE

REGISTERED PROFESSIONAL ENGINEER ROBERT W. KING No. C-58530 Exp. 12-31-16 CIVIL STATE OF CALIFORNIA

*THE STATE OF CALIFORNIA OR ITS OFFICERS OR AGENTS SHALL NOT BE RESPONSIBLE FOR THE ACCURACY OR COMPLETENESS OF SCANNED COPIES OF THIS PLAN SHEET.*

| CONTRACT No. | 01-415004 |
|---|---|
| PROJECT ID | 0113000127 |

P:\PROJ\01\41500\drafting\sheets\0113000127ab001.dgn

PROJECT MANAGER: KIM FLOYD
DESIGN MANAGER: KELLY B. TIMMONS

LAST REVISION 00-00-00
DATE PLOTTED => 17-AUG-2016
TIME PLOTTED => 09:21

| Dist | COUNTY | ROUTE | POST MILES TOTAL PROJECT | SHEET No. | TOTAL SHEETS |
|---|---|---|---|---|---|
| 01 | Hum | 101 | 109.5/R125.8 | 2 | 100 |

Robert King 5-5-16
REGISTERED CIVIL ENGINEER DATE

May 23, 2016
PLANS APPROVAL DATE

REGISTERED PROFESSIONAL ENGINEER ROBERT W. KING No. C-58530 Exp. 12-31-16 CIVIL STATE OF CALIFORNIA

*THE STATE OF CALIFORNIA OR ITS OFFICERS OR AGENTS SHALL NOT BE RESPONSIBLE FOR THE ACCURACY OR COMPLETENESS OF SCANNED COPIES OF THIS PLAN SHEET.*

## NOTES:

1. EXISTING UTILITY FACILITIES HAVE NOT BEEN PLOTTED ON THESE PLANS.
2. DIMENSIONS OF THE PAVEMENT STRUCTURES (STRUCTURAL SECTIONS) ARE SUBJECT TO TOLERANCES SPECIFIED IN THE STANDARD SPECIFICATIONS.
3. FOR LOCATIONS AND DETAILS OF COLD PLANE AC Pvmt, RECONSTRUCT MBGR, REPLACE MGBR WITH MGS, MMA, DIKE, AND RUMBLE STRIP SEE CONSTRUCTION DETAILS AND SUMMARY OF QUANTITIES SHEETS.
4. THE TAPERED EDGE WILL BE CONSTRUCTED WITH EACH LIFT.

## ABBREVIATIONS

| | |
|---|---|
| SRS | SHOULDER RUMBLE STRIP (SINUSOIDAL) (SEE NOTE 3) |
| CLRS | CENTERLINE RUMBLE STRIP (SINUSOIDAL) (SEE NOTE 3) |
| MMA | CYCLEGRIP ® MMAX METHYL METHACRYLATE COLORED RESINS |

## PAVEMENT CLIMATE REGION

NORTH COAST

## DESIGN DESIGNATION (HUM-101-109.5/R125.8)

2017 ADT = 3,640
2027 ADT = 3,750
2017 DHV = 560
2027 DHV = 570

D = 60% T = 10.0%
V = 55 MPH
$TI_{10}$ = 9.0
$TI_{20}$ = 9.5

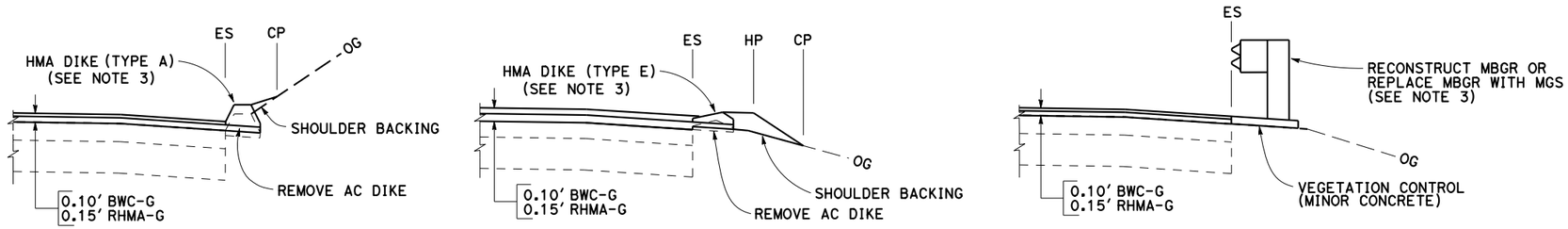


## ALTERNATIVE SHOULDER DETAILS

(SEE QUANTITY SHEETS FOR LOCATIONS)

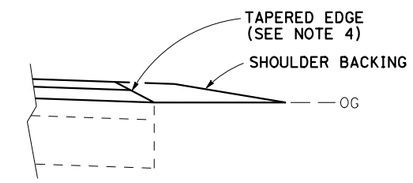


## SHOULDER BACKING DETAIL

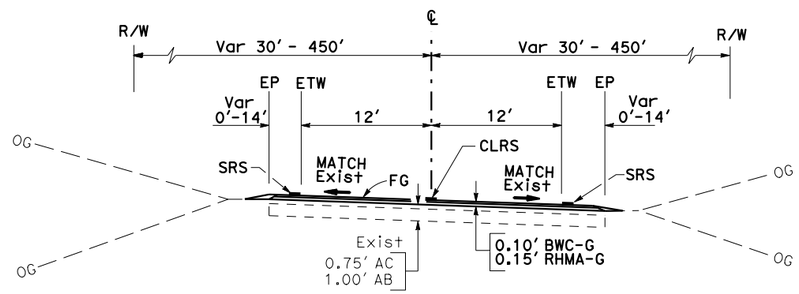


**PM 110.47 - PM 111.30**
**PM 111.70 - PM R112.68**
**PM 114.54 - PM 114.69**
**PM 114.87 - PM 116.45**
**PM 117.07 - PM 118.45**
**PM 118.80 - PM 118.88**
**PM 119.14 - PM 120.66**
**PM 121.72 - PM 122.15**
**PM 122.25 - PM 123.78**
**PM 123.88 - PM 125.73**

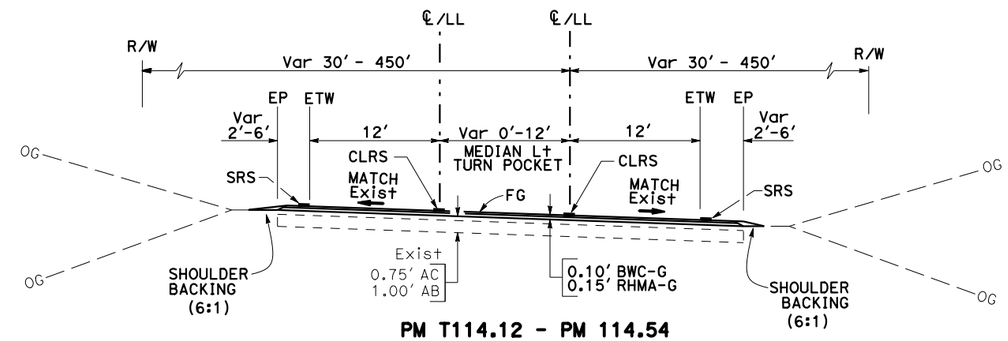


**PM T114.12 - PM 114.54**
**PM 114.69 - PM 114.87**
**PM 118.88 - PM 119.14**
**PM 123.78 - PM 123.82**

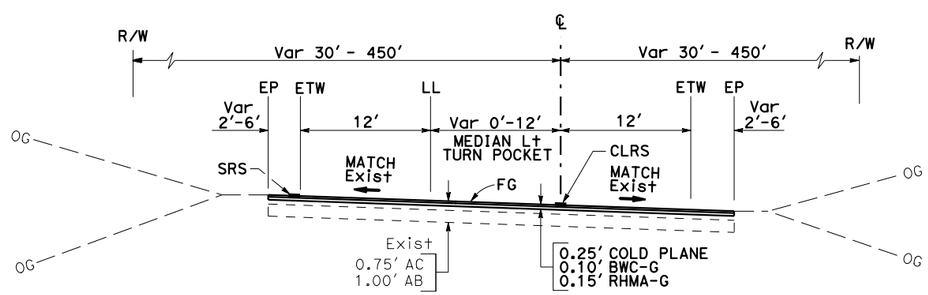


**PM 109.56 - PM 110.47**

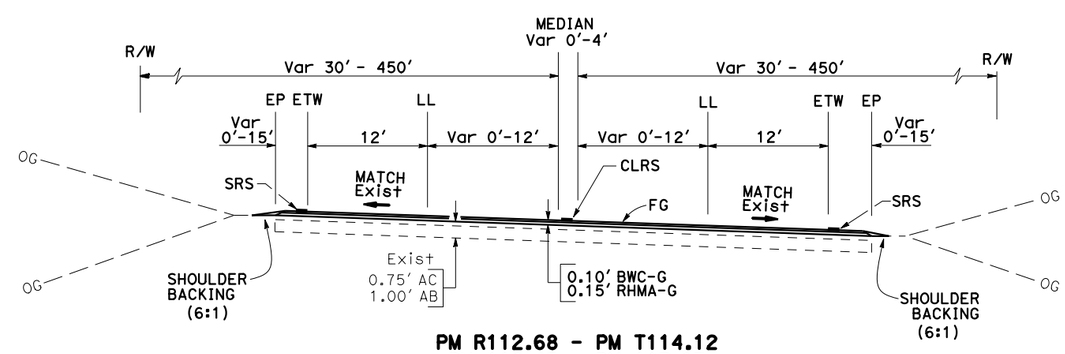


**PM R112.68 - PM T114.12**
**PM 116.45 - PM 117.07**

**ROUTE 101**

# TYPICAL CROSS SECTIONS

NO SCALE

**X-1**

STATE OF CALIFORNIA - DEPARTMENT OF TRANSPORTATION
Caltrans® DESIGN
FUNCTIONAL SUPERVISOR KELLY B. TIMMONS
CALCULATED-DESIGNED BY ROBERT KING
CHECKED BY KELLY B. TIMMONS
REVISED BY
DATE REVISED
P:\PROJ\01\41500\drafting\sheets\0113000127ca001.dgn

LAST REVISION 00-00-00
DATE PLOTTED => 17-AUG-2016
TIME PLOTTED => 09:21

| Dist | COUNTY | ROUTE | POST MILES TOTAL PROJECT | SHEET No. | TOTAL SHEETS |
|---|---|---|---|---|---|
| 01 | Hum | 101 | 109.5/R125.8 | 3 | 100 |

Robert King 5-5-16
REGISTERED CIVIL ENGINEER DATE

May 23, 2016
PLANS APPROVAL DATE

REGISTERED PROFESSIONAL ENGINEER ROBERT W. KING No. C-58530 Exp. 12-31-16 CIVIL STATE OF CALIFORNIA

THE STATE OF CALIFORNIA OR ITS OFFICERS OR AGENTS SHALL NOT BE RESPONSIBLE FOR THE ACCURACY OR COMPLETENESS OF SCANNED COPIES OF THIS PLAN SHEET.

**NOTE:**
EXISTING UTILITY FACILITIES HAVE NOT BEEN PLOTTED ON THESE PLANS.

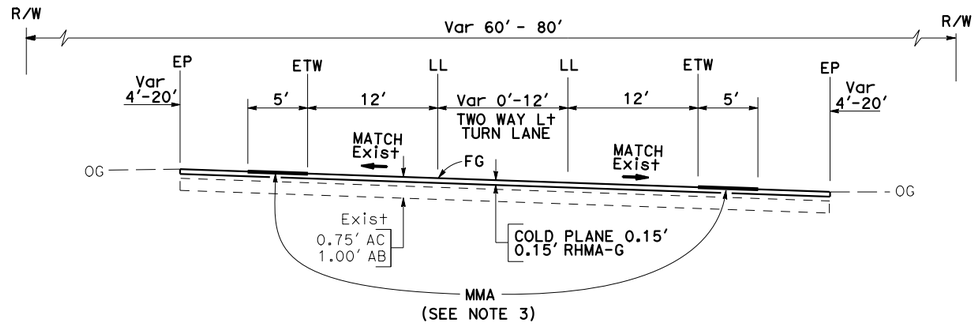


**PM 120.80 - PM 121.70**

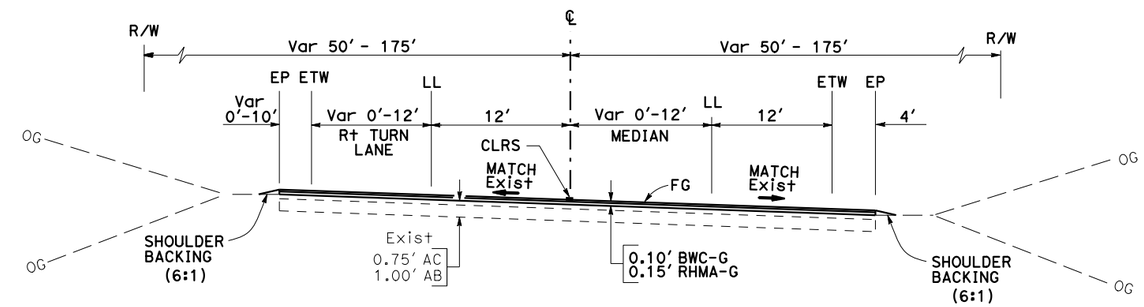


**PM 123.82 - PM 123.88**

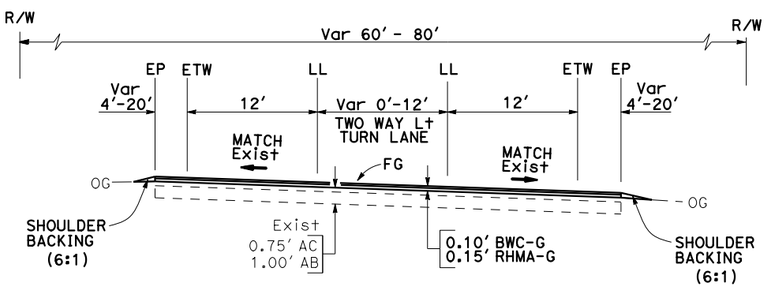


**PM 120.66 - PM 120.80**
**PM 121.70 - PM 121.72**

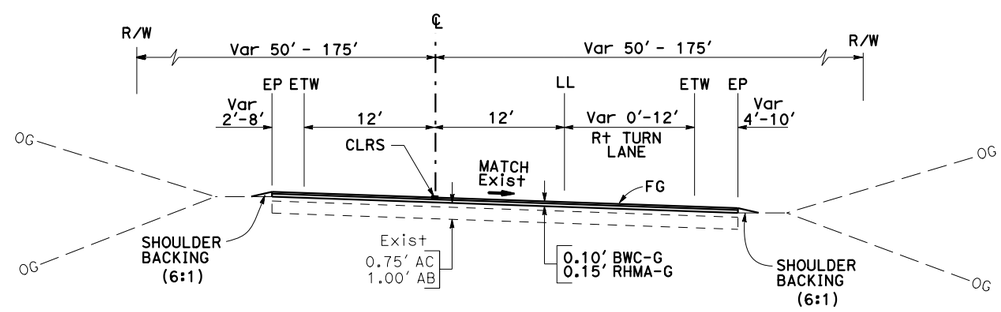


**PM 122.15 - PM 122.25**

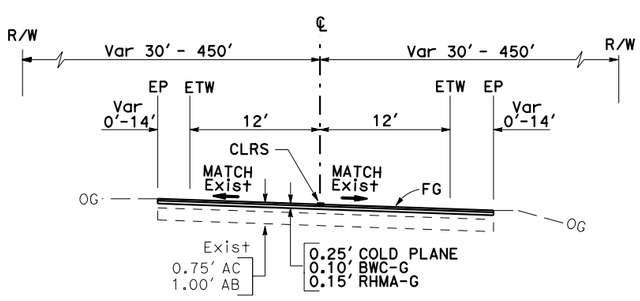


**PM 118.45 - PM 118.80**

**ROUTE 101**

# TYPICAL CROSS SECTIONS
NO SCALE

**X-2**

| REVISED BY | DATE REVISED |
|---|---|
| | |

ROBERT KING — KELLY B. TIMMONS
CALCULATED-DESIGNED BY — CHECKED BY
FUNCTIONAL SUPERVISOR — KELLY B. TIMMONS

STATE OF CALIFORNIA - DEPARTMENT OF TRANSPORTATION
Caltrans® DESIGN

P:\PROJ\01\41500\drafting\sheets\0113000127ca002.dgn

LAST REVISION 00-00-00 — DATE PLOTTED => 17-AUG-2016 — TIME PLOTTED => 09:21

| Dist | COUNTY | ROUTE | POST MILES TOTAL PROJECT | SHEET No. | TOTAL SHEETS |
|---|---|---|---|---|---|
| 01 | Hum | 101 | 109.5/R125.8 | 4 | 100 |

Robert King 5-5-16
REGISTERED CIVIL ENGINEER DATE

May 23, 2016
PLANS APPROVAL DATE

REGISTERED PROFESSIONAL ENGINEER ROBERT W. KING No. C-58530 Exp. 12-31-16 CIVIL STATE OF CALIFORNIA

THE STATE OF CALIFORNIA OR ITS OFFICERS OR AGENTS SHALL NOT BE RESPONSIBLE FOR THE ACCURACY OR COMPLETENESS OF SCANNED COPIES OF THIS PLAN SHEET.

**NOTE:**

EXISTING UTILITY FACILITIES HAVE NOT BEEN PLOTTED ON THESE PLANS.

**LEGEND:**

BWC-G RUBBERIZED HOT MIX ASPHALT (BONDED WEARING COURSE)

RHMA-G RUBBERIZED HOT MIX ASPHALT (GAP GRADED)

LIMITS OF COLD PLANE AC PAVEMENT PRIOR TO RHMA-G & BWC-G OVERLAY

LIMITS OF SURFACING

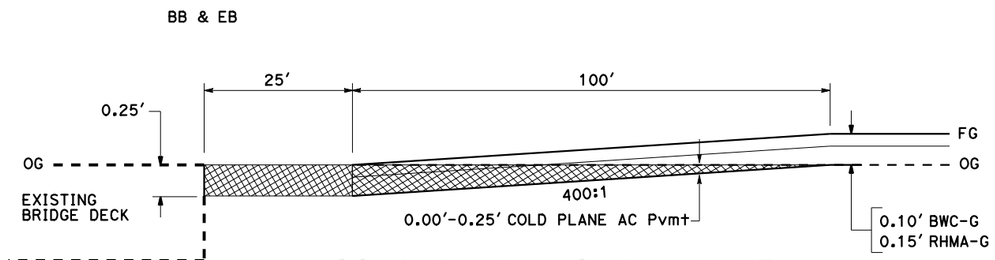


## COLD PLANE AC PAVEMENT AT BB & EB

PM 114.54 - PM 114.55
PM 120.02 - PM 120.03
PM 122.86 - PM 122.88
PM 124.71 - PM 124.73

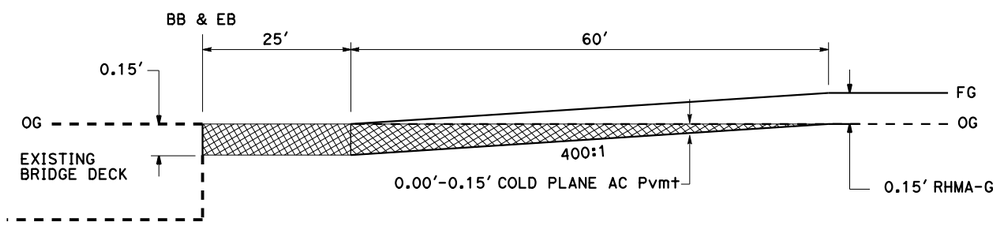


## COLD PLANE AC PAVEMENT AT BB & EB

PM 121.09 - PM 121.16

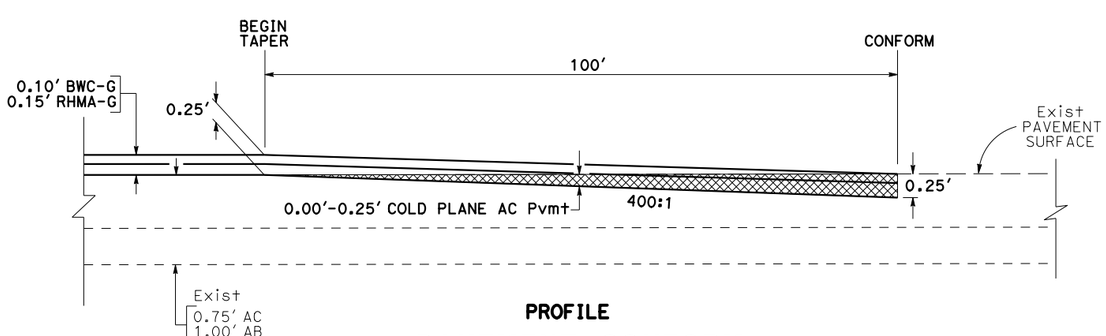


PROFILE

## PAVEMENT CONFORM

PM 111.28 - PM 111.30
PM 111.70 - PM 111.72
PM 125.71 - PM 121.73

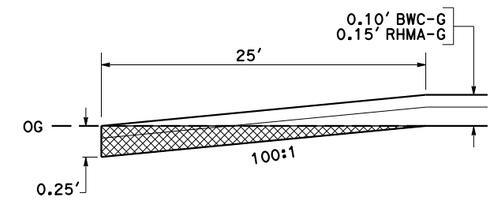


## COLD PLANE AC PAVEMENT AT PUBLIC ROAD CONNECTIONS

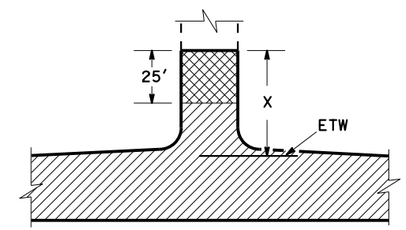


## PUBLIC ROAD CONNECTION

| LOCATION | PM | Rt/ Lt | X (FT) |
|---|---|---|---|
| KANE Rd | 112.54 | Rt | 40 |
| BEACH ACCESS Rd | 112.63 | Lt | 40 |
| McDONALD CREEK Rd | 114.46 | Rt | 40 |
| McDONALD CREEK Rd | 114.46 | Lt | 40 |
| IDLEWOOD Ln | 114.58 | Rt | 37 |
| MEADOW RANCH Rd | 114.73 | Rt | 25 |
| OLD STAGE Rd | 116.87 | Rt | 35 |
| BEACH ACCESS Rd | 117.37 | Lt | 25 |
| BEACH ACCESS Rd | 118.83 | Lt | 40 |
| REDWOOD CREEK BEACH ACCESS | 119.01 | Lt | 40 |
| REFUSE DISPOSAL SITE Rd | 119.95 | Lt | 45 |
| OLD STAGE Rd | 119.99 | Rt | 35 |
| FOSTER Ln | 120.11 | Lt | 25 |
| HILTONS Rd | 120.11 | Rt | 40 |
| LUNDBLADE St | 120.81 | Lt | 30 |
| BALD HILLS Rd | 122.25 | Rt | 40 |
| ROBINSON Rd | 122.68 | Lt | 30 |
| PRAIRIE CREEK CAMP Rd | 122.89 | Rt | 42 |
| DAVIDSON Rd | 123.82 | Lt | 40 |
| Rd TO SIMPSON LOGGING SCALE | 124.42 | Rt | 30 |
| PRIVATE Rd | 124.60 | Lt | 37 |
| FISH HATCHERY Rd | 124.75 | Rt | 48 |

## LIMITS OF SURFACING FOR PUBLIC ROAD CONNECTIONS

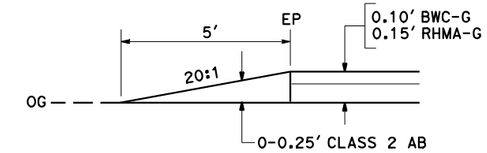


## UNPAVED CONFORM AT PRIVATE DRIVEWAY CONNECTIONS

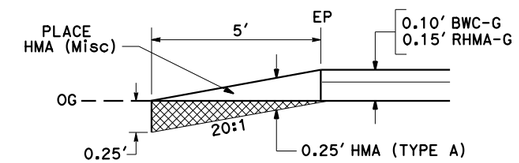


## HMA CONFORM AT PRIVATE DRIVEWAY CONNECTIONS

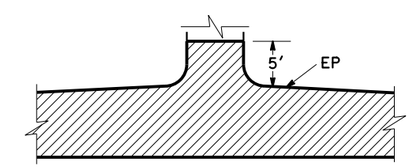


## PRIVATE DRIVEWAY CONNECTION

# CONSTRUCTION DETAILS

NO SCALE

C-1

REVISED BY | DATE REVISED
ROBERT KING | KELLY B. TIMMONS
CALCULATED-DESIGNED BY | CHECKED BY
FUNCTIONAL SUPERVISOR | KELLY B. TIMMONS
STATE OF CALIFORNIA - DEPARTMENT OF TRANSPORTATION
Caltrans
DESIGN

P:\PROJ\01\41500\drafting\sheets\0113000127ga001.dgn

LAST REVISION 00-00-00 | DATE PLOTTED => 17-AUG-2016 | TIME PLOTTED => 09:21

| Dist | COUNTY | ROUTE | POST MILES TOTAL PROJECT | SHEET No. | TOTAL SHEETS |
|---|---|---|---|---|---|
| 01 | Hum | 101 | 109.5/R125.8 | 5 | 100 |

Robert King 5-5-16
REGISTERED CIVIL ENGINEER DATE

May 23, 2016
PLANS APPROVAL DATE

REGISTERED PROFESSIONAL ENGINEER ROBERT W. KING No. C-58530 Exp. 12-31-16 CIVIL STATE OF CALIFORNIA

THE STATE OF CALIFORNIA OR ITS OFFICERS OR AGENTS SHALL NOT BE RESPONSIBLE FOR THE ACCURACY OR COMPLETENESS OF SCANNED COPIES OF THIS PLAN SHEET.

**NOTE:**

EXISTING UTILITY FACILITIES HAVE NOT BEEN PLOTTED ON THESE PLANS.

**LEGEND:**

BWC-G = RUBBERIZED HOT MIX ASPHALT (BONDED WEARING COURSE)

RHMA-G = RUBBERIZED HOT MIX ASPHALT (GAP GRADED)

LIMITS OF COLD PLANE AC PAVEMENT PRIOR TO RHMA-G & BWC-G OVERLAY

LIMITS OF SURFACING

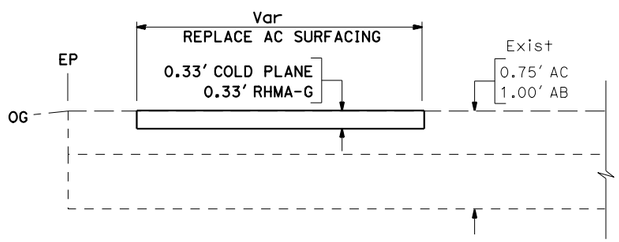


**REPLACE AC SURFACING**

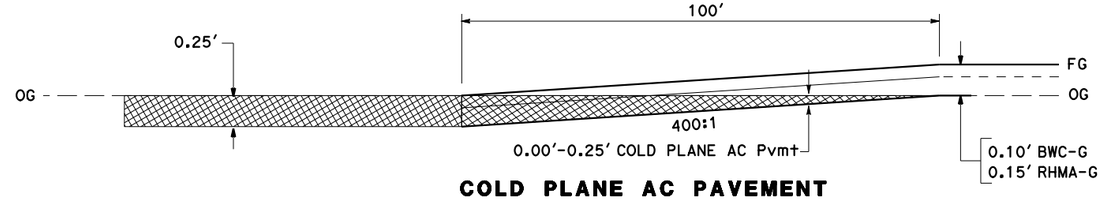


**COLD PLANE AC PAVEMENT**
PM 109.56 - PM 110.49

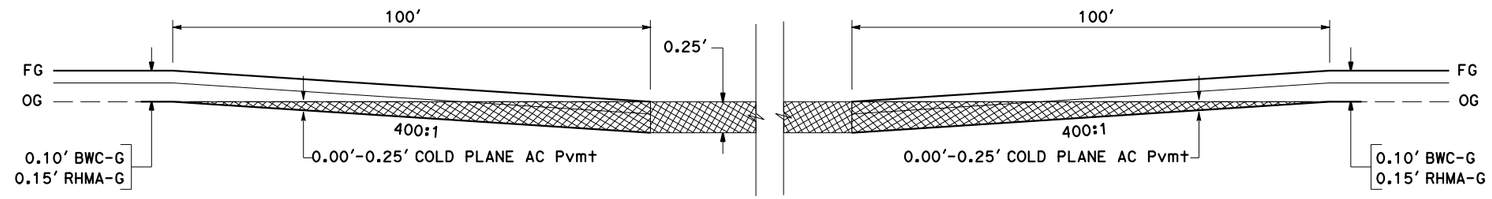


**COLD PLANE AC PAVEMENT**
PM 118.43 - PM 118.82

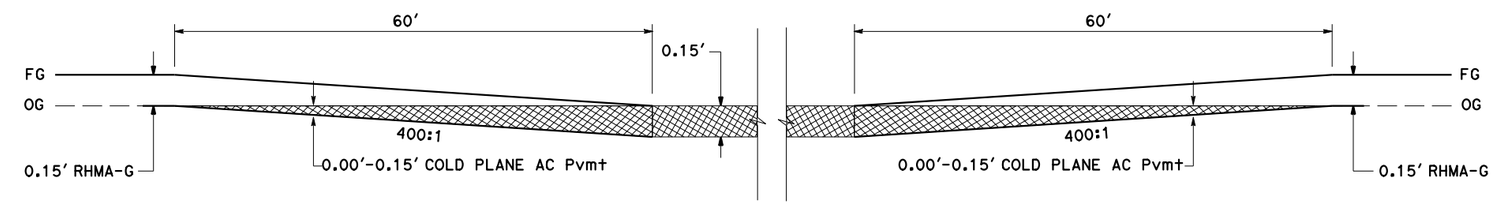


**COLD PLANE AC PAVEMENT**
PM 120.79 - PM 121.71

**NOTES:**

1. GRIND EXISTING SURFACES TO ACCOMODATE A MINIMUM TAPER THICKNESS OF 0.10' WHEN EITHER:
   A. HMA MATERIAL SUCH AS RUBBERIZED, POLYMER MODIFIED OR OPEN GRADED IS UNSUITABLE FOR RAKING TO A MAXIMUM 0.02' THICKNESS AT THE CONFORM.
   B. TEMPORARY TAPER WILL BE IN PLACE FOR MORE THAN 14 DAYS.
2. PERMANENT SURFACE MAY BE EXISTING OR NEW PAVEMENT.
3. ROADWAY SURFACE IS THE TOP OF EXISTING SURFACE OR THE TOP OF THE PLANED SURFACE.
4. FOR TEMPORARY TAPERS ON BRIDGE DECKS AND APPROACH SLABS, CONSTRUCT TEMPORARY TAPERS WITH POLYESTER CONCRETE.
5. IF AUTHORIZED, YOU MAY USE ALTERNATIVE MATERIALS OR METHODS TO PRODUCE THE REQUIRED TAPER.

**LEGEND**

HMA MATERIAL (TEMPORARY TAPER) (SEE NOTE 4)

IF NECESSARY, COLD PLANE ASPHALT CONCRETE PAVEMENT AND PLACE HMA MATERIAL (SEE NOTE 1)

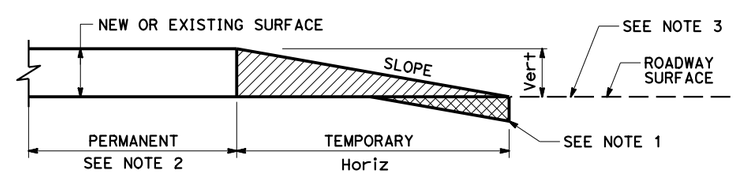


| Vert | SLOPE RATIO Horiz/Vert |
|---|---|
| 0-0.10' | 70:1 |
| GREATER THAN 0.10' | 160:1 |

**TYPICAL PAVING CONFORM FOR TEMPORARY CONSTRUCTION TAPERS**

# CONSTRUCTION DETAILS

NO SCALE

C-2

REVISED BY | DATE REVISED
ROBERT KING | KELLY B. TIMMONS
CALCULATED-DESIGNED BY | CHECKED BY
FUNCTIONAL SUPERVISOR | KELLY B. TIMMONS
STATE OF CALIFORNIA - DEPARTMENT OF TRANSPORTATION
Caltrans DESIGN

P:\PROJ\01\41500\drafting\sheets\0113000127ga002.dgn

LAST REVISION 00-00-00 | DATE PLOTTED => 17-AUG-2016 | TIME PLOTTED => 09:21

| Dist | COUNTY | ROUTE | POST MILES TOTAL PROJECT | SHEET No. | TOTAL SHEETS |
|---|---|---|---|---|---|
| 01 | Hum | 101 | 109.5/R125.8 | 6 | 100 |

Robert King 5-5-16
REGISTERED CIVIL ENGINEER DATE

May 23, 2016
PLANS APPROVAL DATE

REGISTERED PROFESSIONAL ENGINEER ROBERT W. KING No. C-58530 Exp. 12-31-16 CIVIL STATE OF CALIFORNIA

THE STATE OF CALIFORNIA OR ITS OFFICERS OR AGENTS SHALL NOT BE RESPONSIBLE FOR THE ACCURACY OR COMPLETENESS OF SCANNED COPIES OF THIS PLAN SHEET.

**NOTE:**
EXISTING UTILITY FACILITIES HAVE NOT BEEN PLOTTED ON THESE PLANS.

| LOCATION | CENTERLINE DEPTH INCHES | SHOULDER DEPTH INCHES |
|---|---|---|
| a | 0 | 0 |
| b | 1/8 | 1/16 |
| c | 5/16 | 5/32 |
| d | 9/16 | 9/32 |
| e | 5/8 | 5/16 |

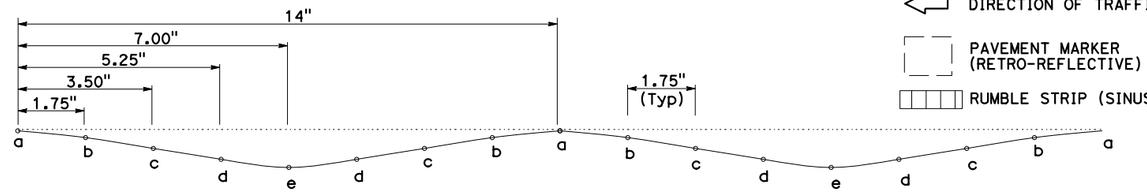


ELEVATION

DIRECTION OF TRAFFIC
PAVEMENT MARKER (RETRO-REFLECTIVE)
RUMBLE STRIP (SINUSOIDAL)

# PATENT PENDING
# No. 14451638

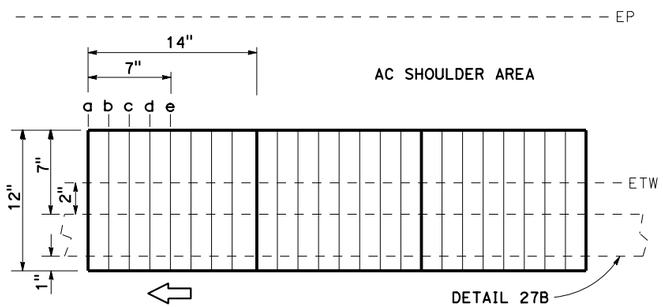


MODIFIED

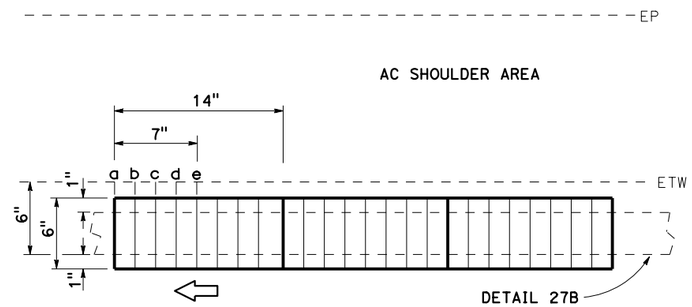


EDGELINE

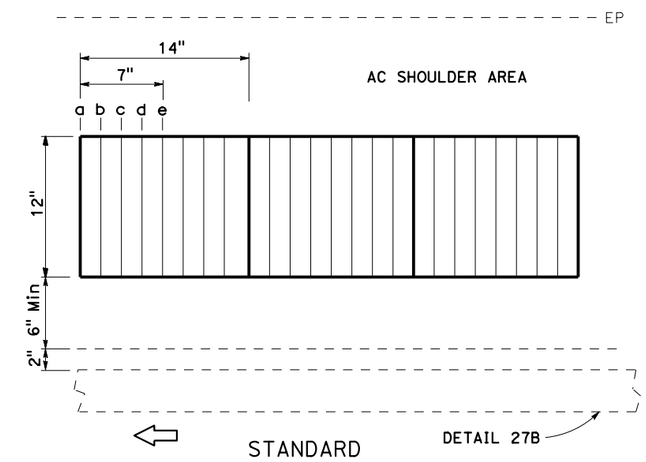


STANDARD

## SHOULDER

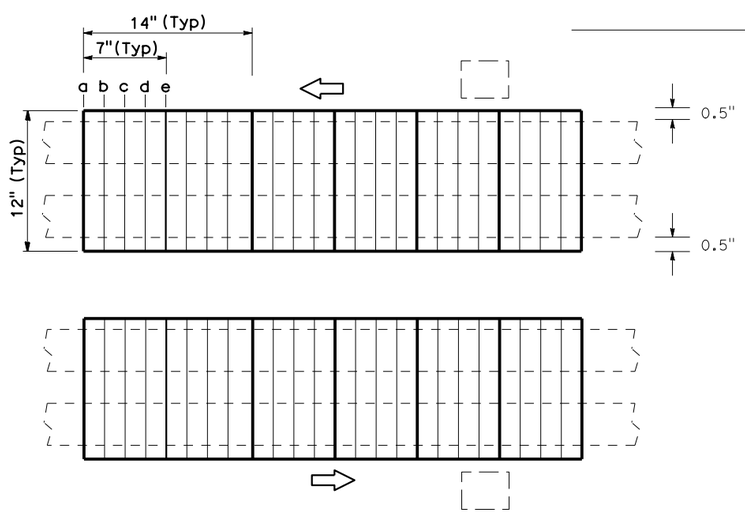


WITH DETAIL 29

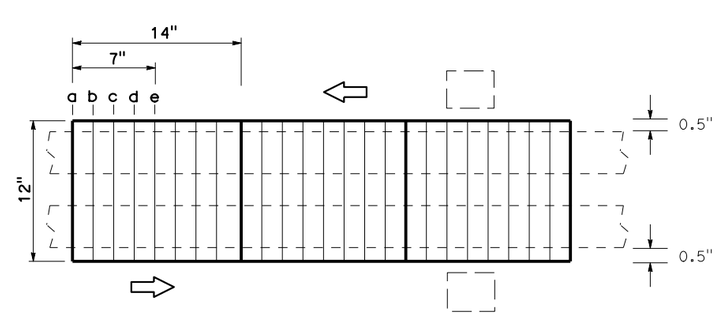


WITH DETAIL 22

## CENTERLINE

# CONSTRUCTION DETAILS
NO SCALE

C-3

STATE OF CALIFORNIA - DEPARTMENT OF TRANSPORTATION
Caltrans DESIGN

ROBERT KING — CALCULATED-DESIGNED BY
KELLY B. TIMMONS — CHECKED BY
KELLY B. TIMMONS — FUNCTIONAL SUPERVISOR
REVISED BY — DATE REVISED

P:\PROJ\01\41500\drafting\sheets\0113000127ga003.dgn

LAST REVISION 00-00-00 — DATE PLOTTED => 17-AUG-2016 TIME PLOTTED => 09:22

| Dist | COUNTY | ROUTE | POST MILES TOTAL PROJECT | SHEET No. | TOTAL SHEETS |
|---|---|---|---|---|---|
| 01 | Hum | 101 | 109.5/R125.8 | 7 | 100 |

Robert King
REGISTERED CIVIL ENGINEER 5-5-16 DATE

May 23, 2016
PLANS APPROVAL DATE

REGISTERED PROFESSIONAL ENGINEER ROBERT W. KING No. C-58530 Exp. 12-31-16 CIVIL STATE OF CALIFORNIA

*THE STATE OF CALIFORNIA OR ITS OFFICERS OR AGENTS SHALL NOT BE RESPONSIBLE FOR THE ACCURACY OR COMPLETENESS OF SCANNED COPIES OF THIS PLAN SHEET.*

**NOTE:**
EXISTING UTILITY FACILITIES HAVE NOT BEEN PLOTTED ON THESE PLANS.

**LEGEND**

▪▪▪▪▪▪▪▪▪▪ RUMBLESTRIP (SINUSOIDAL)

* OMMISSION LENGTH FOR BEACH ACCESS Rd (PM 112.63) = 425′
OMMISSION LENGTH FOR OLD STATE Hwy (PM 116.87) = 195′

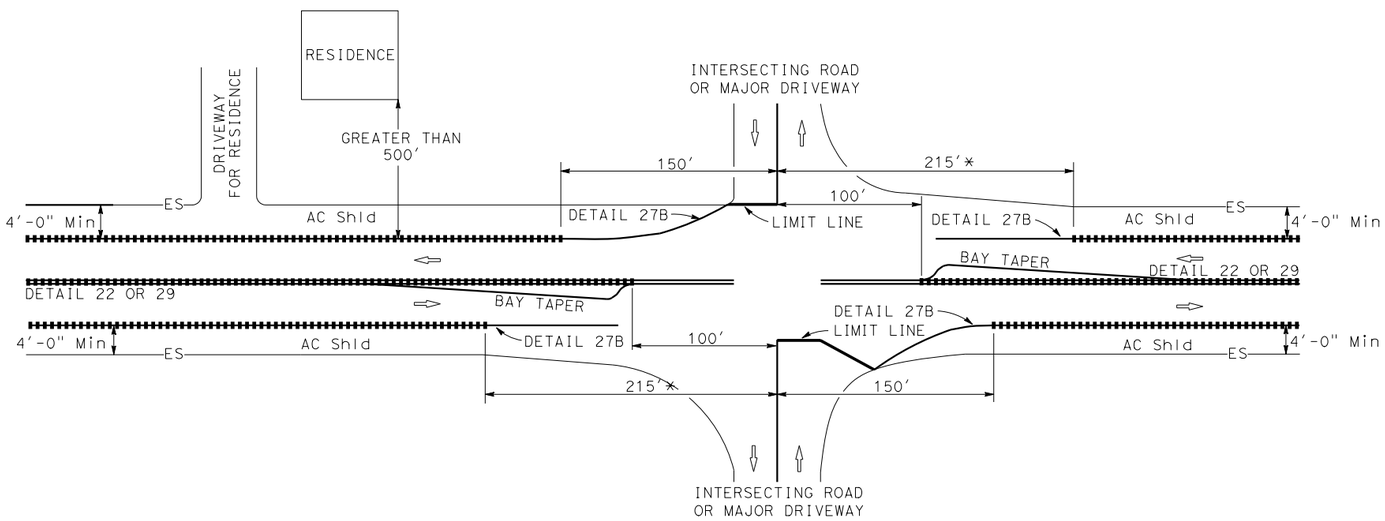


**RESIDENCE GREATER THAN 500 FEET FROM ETW**

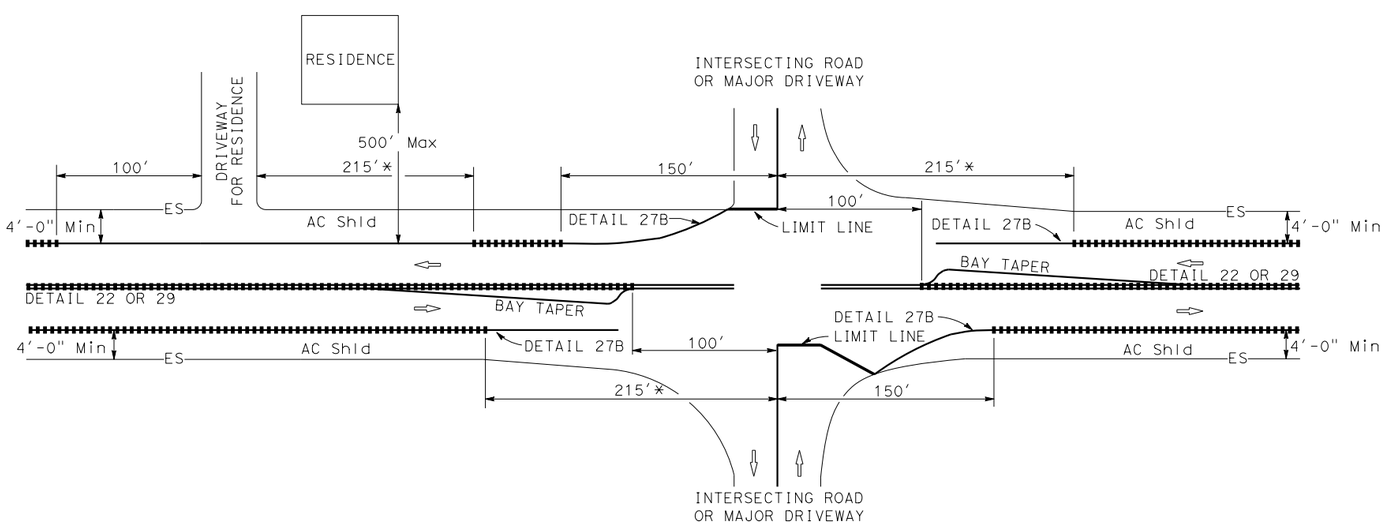


**RESIDENCE 500 FEET OR LESS FROM ETW**

## RUMBLE STRIP AT INTERSECTING ROADS AND DRIVEWAYS

## CONSTRUCTION DETAILS
NO SCALE

C-4

ROBERT KING — REVISED BY — DATE REVISED
KELLY B. TIMMONS — CALCULATED-DESIGNED BY — CHECKED BY
KELLY B. TIMMONS — FUNCTIONAL SUPERVISOR
STATE OF CALIFORNIA - DEPARTMENT OF TRANSPORTATION — Caltrans — DESIGN

P:\PROJ\01\41500\drafting\sheets\0113000127ga004.dgn

LAST REVISION 00-00-00 — DATE PLOTTED => 17-AUG-2016 — TIME PLOTTED => 09:22

| Dist | COUNTY | ROUTE | POST MILES TOTAL PROJECT | SHEET No. | TOTAL SHEETS |
|---|---|---|---|---|---|
| 01 | Hum | 101 | 109.5/R125.8 | 8 | 100 |

Robert King 5-5-16
REGISTERED CIVIL ENGINEER DATE

May 23, 2016
PLANS APPROVAL DATE

REGISTERED PROFESSIONAL ENGINEER ROBERT W. KING No. C-58530 Exp. 12-31-16 CIVIL STATE OF CALIFORNIA

THE STATE OF CALIFORNIA OR ITS OFFICERS OR AGENTS SHALL NOT BE RESPONSIBLE FOR THE ACCURACY OR COMPLETENESS OF SCANNED COPIES OF THIS PLAN SHEET.

**NOTE:**
EXISTING UTILITY FACILITIES HAVE NOT BEEN PLOTTED ON THESE PLANS.

**ABBREVIATIONS**

MMA CYCLEGRIP ® MMAX METHYL METHACRYLATE COLORED RESINS

**LEGEND**

MMA

XX STRIPING DETAIL TYPE

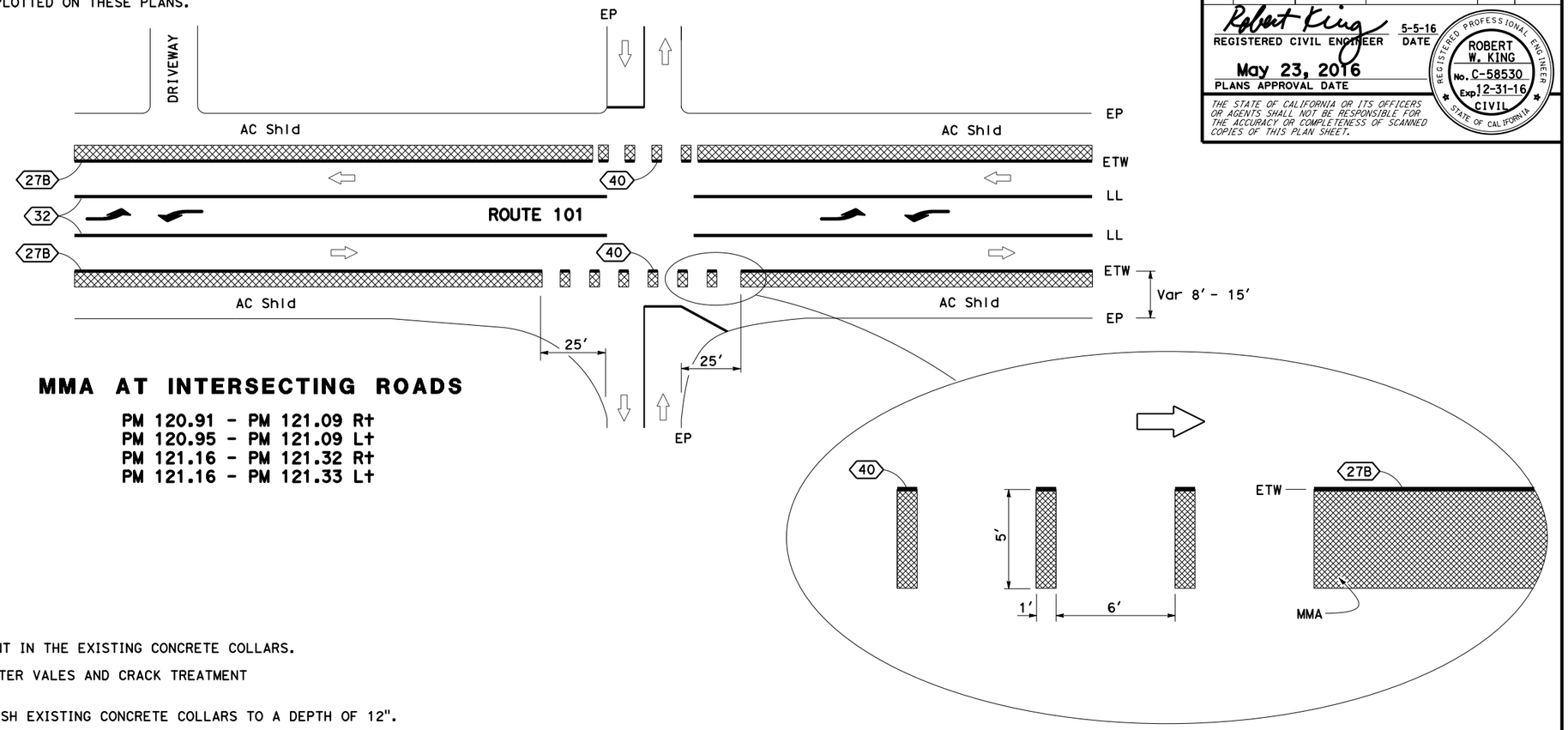


## MMA AT INTERSECTING ROADS

PM 120.91 - PM 121.09 R†
PM 120.95 - PM 121.09 L†
PM 121.16 - PM 121.32 R†
PM 121.16 - PM 121.33 L†

**NOTES:**

1. REINFORCING STEEL IS POTENTIALLY PRESENT IN THE EXISTING CONCRETE COLLARS.
2. FOR LOCATIONS AND DETAILS OF ADJUST WATER VALES AND CRACK TREATMENT SEE SUMMARY OF QUANTITY SHEETS.
3. THE CONTRACTOR SHALL COMPLETELY DEMOLISH EXISTING CONCRETE COLLARS TO A DEPTH OF 12".

**ABBREVIATIONS**

W - WIDTH OF ROUTING = WIDTH OF CRACK +1/4" Min
D - DEPTH OF ROUTING = W +1/4" Min
(E) - EXISTING

**LEGEND**

CRACK SEALANT

CONCRETE COLLAR

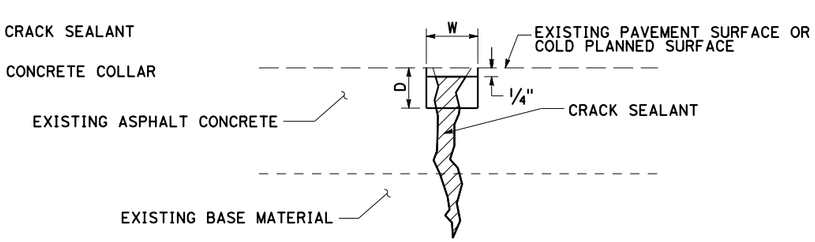


TYPICAL CROSS SECTION

## CRACK TREATMENT **

** ALL CRACKS 1/4" WIDE OR GREATER ARE TO BE ROUTED AND SEALED. IF ANY PART OF CRACKS IS 1/4" OR WIDER, THEN THE ENTIRE CRACK WILL BE ROUTED AND SEALED. NO SEALANT MATERIAL WILL BE ALLOWED ON HMA PAVEMENT SURFACE.

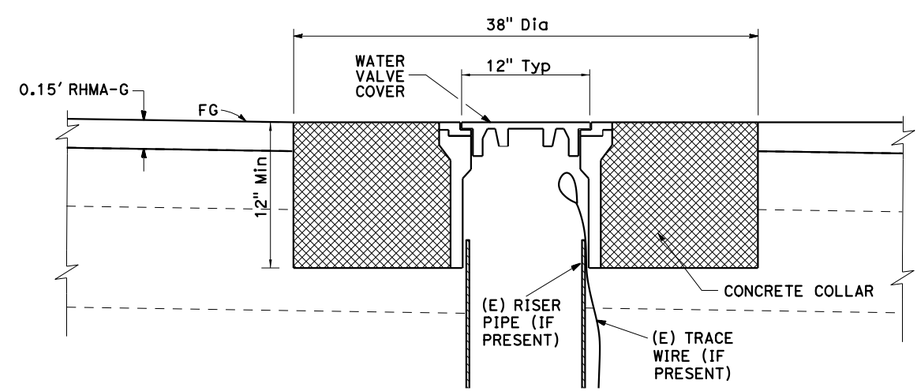


## ADJUST WATER VALVE

# CONSTRUCTION DETAILS

NO SCALE

C-5

REVISED BY | DATE REVISED
ROBERT KING | KELLY B. TIMMONS
CALCULATED-DESIGNED BY | CHECKED BY
FUNCTIONAL SUPERVISOR: KELLY B. TIMMONS
STATE OF CALIFORNIA - DEPARTMENT OF TRANSPORTATION
Caltrans DESIGN

P:\PROJ\01\41500\drafting\sheets\0113000127ga005.dgn

LAST REVISION 00-00-00 | DATE PLOTTED => 17-AUG-2016 | TIME PLOTTED => 09:22

| Dist | COUNTY | ROUTE | POST MILES TOTAL PROJECT | SHEET No. | TOTAL SHEETS |
|---|---|---|---|---|---|
| 01 | Hum | 101 | 109.5/R125.8 | 9 | 100 |

Robert King 5-5-16
REGISTERED CIVIL ENGINEER DATE

May 23, 2016
PLANS APPROVAL DATE

REGISTERED PROFESSIONAL ENGINEER ROBERT W. KING No. C-58530 Exp. 12-31-16 CIVIL STATE OF CALIFORNIA

THE STATE OF CALIFORNIA OR ITS OFFICERS OR AGENTS SHALL NOT BE RESPONSIBLE FOR THE ACCURACY OR COMPLETENESS OF SCANNED COPIES OF THIS PLAN SHEET.

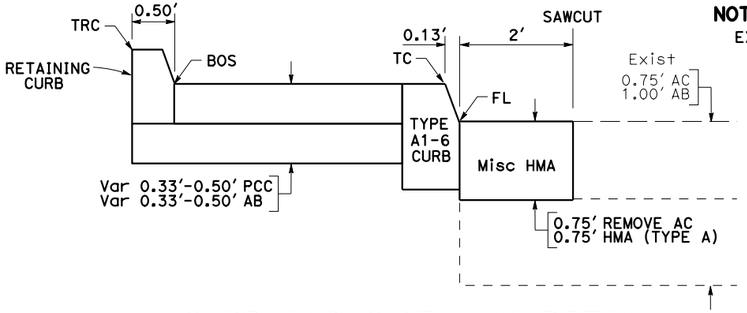


## CURB AND SIDEWALK DETAIL

**NOTE:**
EXISTING UTILITY FACILITIES HAVE NOT BEEN PLOTTED ON THESE PLANS.

**LEGEND**

- DETECTABLE WARNING SURFACE
- UTILITY POLE
- SIGN
- BOS — BACK OF SIDEWALK
- TRC — TOP OF RETAINING CURB
- DIRECTION OF SLOPE

| POINT NAME | ALIGNMENT LINE | STATION | OFFSET FT | R+/L+ | ELEVATION FT | REMARKS |
|---|---|---|---|---|---|---|
| 1-1 | R1 | 10+20.00 | 0.13 | L+ | 29.06 | TC |
| 1-2 | R1 | 10+20.00 | 5.50 | L+ | 29.02 | BOS |
| 1-3 | R1 | 10+24.27 | 0 | | 29.12 | FL |
| 1-4 | R1 | 10+26.00 | 1.70 | L+ | 29.16 | FL |
| 1-5 | R1 | 10+26.00 | 5.50 | L+ | 29.11 | FL/BOS |

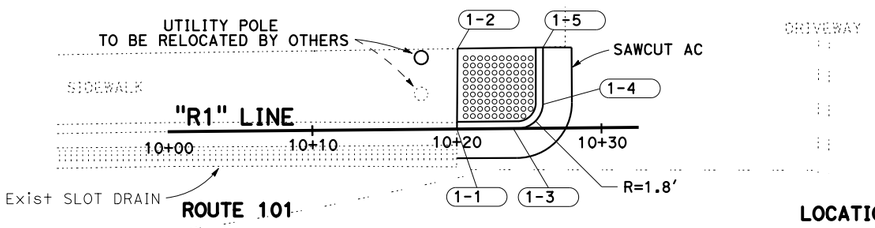


## ADA RAMP 1, CASE C MODIFIED

LOCATION 1
PM 120.94 - PM 120.95

| POINT NAME | ALIGNMENT LINE | STATION | OFFSET FT | R+/L+ | ELEVATION FT | REMARKS |
|---|---|---|---|---|---|---|
| 2-1 | R2 | 20+00.00 | 0.13 | L+ | 29.73 | TRC |
| 2-2 | R2 | 20+00.50 | 0 | | 29.48 | FL |
| 2-3 | R2 | 20+04.90 | 0 | | 29.42 | FL |
| 2-4 | R2 | 20+07.75 | 0 | | 29.39 | FL |
| 2-5 | R2 | 20+16.80 | 0 | | 29.33 | FL |
| 2-6 | R2 | 20+16.80 | 6.22 | L+ | 29.42 | BOS |
| 2-7 | R2 | 20+16.80 | 6.73 | L+ | 29.96 | TRC |
| 2-8 | R2 | 20+22.50 | 0.13 | L+ | 29.70 | TC |
| 2-9 | R2 | 20+22.50 | 6.73 | L+ | 29.84 | BOS |
| 2-10 | R2 | 20+26.75 | 0.13 | L+ | 29.69 | TC |
| 2-11 | R2 | 20+26.75 | 6.73 | L+ | 29.90 | BOS |

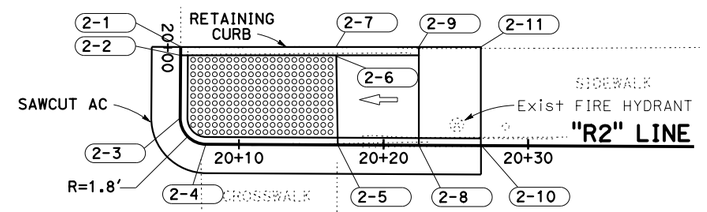


ROUTE 101

## ADA RAMP 2, CASE CM

| POINT NAME | ALIGNMENT LINE | STATION | OFFSET FT | R+/L+ | ELEVATION FT | REMARKS |
|---|---|---|---|---|---|---|
| 3-1 | R3 | 30+00.00 | 0.13 | L+ | 29.03 | TC |
| 3-2 | R3 | 30+00.00 | 5.20 | L+ | 29.06 | BOS |
| 3-3 | R3 | 30+05.60 | 0 | | 28.71 | FL |
| 3-4 | R3 | 30+05.60 | 4.70 | L+ | 28.77 | BOS |
| 3-5 | R3 | 30+05.60 | 5.20 | L+ | 29.05 | TRC |
| 3-6 | R3 | 30+15.20 | 0 | | 28.57 | FL |
| 3-7 | R3 | 30+15.20 | 4.50 | L+ | 28.63 | BOS |
| 3-8 | R3 | 30+15.20 | 5.00 | L+ | 29.03 | TRC |
| 3-9 | R3 | 30+21.00 | 0.13 | L+ | 28.98 | TC |
| 3-10 | R3 | 30+21.00 | 5.00 | L+ | 29.04 | BOS |

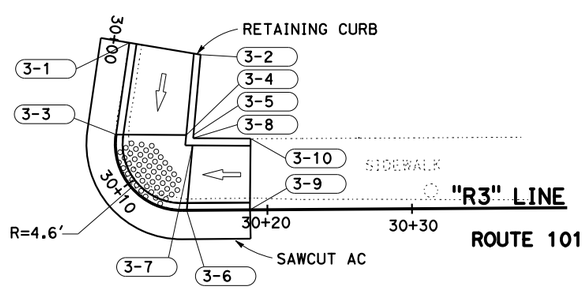


## ADA RAMP 3, CASE C

LOCATION 2
PM 121.01

| POINT NAME | ALIGNMENT LINE | STATION | OFFSET FT | R+/L+ | ELEVATION FT | REMARKS |
|---|---|---|---|---|---|---|
| 4-1 | R4 | 40+14.90 | 0.13 | L+ | 28.98 | TC |
| 4-2 | R4 | 40+14.90 | 5.00 | L+ | 29.08 | BOS |
| 4-3 | R4 | 40+15.70 | 0.13 | L+ | 28.98 | TC |
| 4-4 | R4 | 40+15.70 | 5.00 | L+ | 29.08 | BOS |
| 4-5 | R4 | 40+21.10 | 0 | | 28.64 | FL |
| 4-6 | R4 | 40+21.10 | 4.570 | L+ | 28.70 | BOS |
| 4-7 | R4 | 40+21.10 | 5.00 | L+ | 29.10 | TRC |
| 4-8 | R4 | 40+31.25 | 0 | | 28.65 | FL |
| 4-9 | R4 | 40+31.25 | 4.50 | L+ | 28.71 | BOS |
| 4-10 | R4 | 40+31.25 | 5.00 | L+ | 29.11 | TRC |
| 4-11 | R4 | 40+39.25 | 0.13 | L+ | 28.99 | TC |
| 4-12 | R4 | 40+39.25 | 5.00 | L+ | 29.12 | BOS |

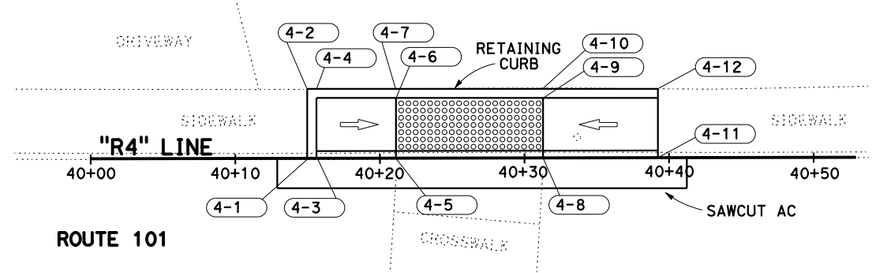


ROUTE 101

## ADA RAMP 4, CASE C

LOCATION 3
PM 121.03

# CONSTRUCTION DETAILS

SCALE: 1" = 5'

C-6

ROBERT KING — KELLY B. TIMMONS — REVISED BY — DATE REVISED
CALCULATED-DESIGNED BY — CHECKED BY
FUNCTIONAL SUPERVISOR — KELLY B. TIMMONS
STATE OF CALIFORNIA - DEPARTMENT OF TRANSPORTATION — DESIGN

P:\PROJ\01\41500\drafting\sheets\0113000127ga006.dgn

LAST REVISION 00-00-00 — DATE PLOTTED => 17-AUG-2016 — TIME PLOTTED => 09:22

| Dist | COUNTY | ROUTE | POST MILES TOTAL PROJECT | SHEET No. | TOTAL SHEETS |
|---|---|---|---|---|---|
| 01 | Hum | 101 | 109.5/R125.8 | 10 | 100 |

Robert King 5-5-16
REGISTERED CIVIL ENGINEER DATE

May 23, 2016
PLANS APPROVAL DATE

REGISTERED PROFESSIONAL ENGINEER ROBERT W. KING No. C-58530 Exp. 12-31-16 CIVIL STATE OF CALIFORNIA

*THE STATE OF CALIFORNIA OR ITS OFFICERS OR AGENTS SHALL NOT BE RESPONSIBLE FOR THE ACCURACY OR COMPLETENESS OF SCANNED COPIES OF THIS PLAN SHEET.*

**NOTE:**

EXISTING UTILITY FACILITIES HAVE NOT BEEN PLOTTED ON THESE PLANS.

| POINT NAME | ALIGNMENT LINE | STATION | OFFSET FT | R+/L+ | ELEVATION FT | REMARKS |
|---|---|---|---|---|---|---|
| 5-1 | R5 | 50+00.00 | 0.13 | L+ | 30.79 | TC |
| 5-2 | R5 | 50+00.00 | 7.00 | L+ | 30.90 | BOS |
| 5-3 | R5 | 50+10.00 | 0.13 | L+ | 30.81 | TC |
| 5-4 | R5 | 50+10.00 | 7.00 | L+ | 30.92 | BOS |
| 5-5 | R5 | 50+15.75 | 0.13 | L+ | 30.79 | TC |
| 5-6 | R5 | 50+15.75 | 7.00 | L+ | 30.89 | BOS |
| 5-7 | R5 | 50+19.75 | 0 | | 30.58 | FL |
| 5-8 | R5 | 50+19.75 | 7.00 | L+ | 30.67 | BOS |
| 5-9 | R5 | 50+28.00 | 0 | | 30.59 | FL |
| 5-10 | R5 | 50+28.00 | 7.00 | L+ | 30.68 | BOS |
| 5-11 | R5 | 50+31.50 | 0.13 | L+ | 30.82 | TC |
| 5-12 | R5 | 50+31.50 | 7.00 | L+ | 30.91 | BOS |
| 6-1 | R6 | 60+00.00 | 0 | | 31.27 | FL |
| 6-2 | R6 | 60+00.00 | 6.00 | L+ | 31.32 | BOS |
| 6-3 | R6 | 60+03.50 | 0 | | 31.32 | FL |
| 6-4 | R6 | 60+03.50 | 6.00 | L+ | 31.36 | BOS |
| 6-7 | R6 | 60+15.50 | 0.13 | L+ | 32.15 | TC |
| 6-8 | R6 | 60+15.50 | 6.00 | L+ | 32.19 | BOS |

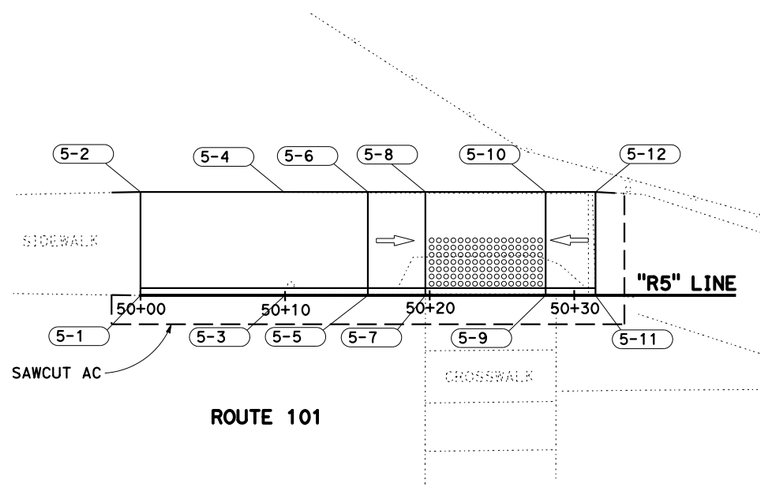


ROUTE 101

**ADA RAMP 5**
**CASE C, MODIFIED**

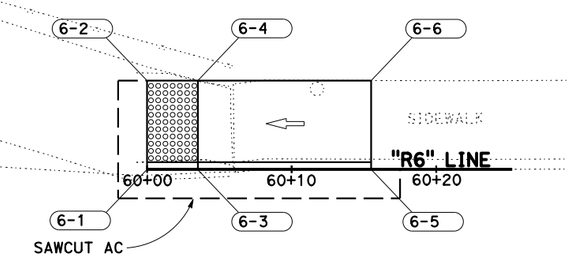


ROUTE 101

**ADA RAMP 6**
**CASE C, MODIFIED**

**LOCATION 4**
**PM 121.29 - PM 121.30**

# CONSTRUCTION DETAILS

SCALE: 1" = 5'

C-7

STATE OF CALIFORNIA - DEPARTMENT OF TRANSPORTATION
Caltrans
DESIGN

FUNCTIONAL SUPERVISOR: KELLY B. TIMMONS
CALCULATED-DESIGNED BY: ROBERT KING
CHECKED BY: KELLY B. TIMMONS
REVISED BY
DATE REVISED

P:\PROJ\01\41500\drafting\sheets\0113000127ga007.dgn

LAST REVISION 00-00-00
DATE PLOTTED => 17-AUG-2016
TIME PLOTTED => 09:22

| Dist | COUNTY | ROUTE | POST MILES TOTAL PROJECT | SHEET No. | TOTAL SHEETS |
|---|---|---|---|---|---|
| 01 | Hum | 101 | 109.5/R125.8 | 11 | 100 |

Robert King 5-5-16
REGISTERED CIVIL ENGINEER DATE

May 23, 2016
PLANS APPROVAL DATE

REGISTERED PROFESSIONAL ENGINEER ROBERT W. KING No. C-58530 Exp. 12-31-16 CIVIL STATE OF CALIFORNIA

*THE STATE OF CALIFORNIA OR ITS OFFICERS OR AGENTS SHALL NOT BE RESPONSIBLE FOR THE ACCURACY OR COMPLETENESS OF SCANNED COPIES OF THIS PLAN SHEET.*

**NOTE:**

EXISTING UTILITY FACILITIES HAVE NOT BEEN PLOTTED ON THESE PLANS.

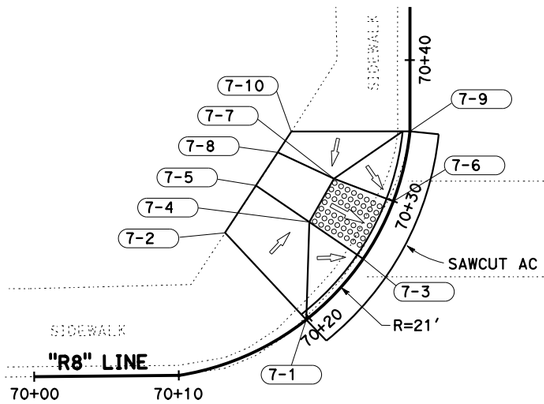


ROUTE 101

**ADA RAMP 7**
**CASE B**

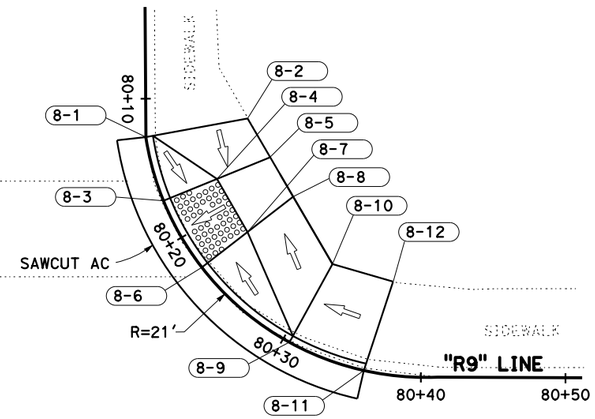


ROUTE 101

**ADA RAMP 8**
**CASE B**

**LOCATION 5**
**PM 121.33 - PM 121.34**

| POINT NAME | ALIGNMENT LINE | STATION | OFFSET FT | L+/R+ | ELEVATION FT | REMARKS |
|---|---|---|---|---|---|---|
| 7-1 | R7 | 70+19.90 | 0.13 | L+ | 31.38 | TC |
| 7-2 | R7 | 70+19.90 | 8.10 | L+ | 31.46 | BOS |
| 7-3 | R7 | 70+25.50 | 0 | | 30.88 | FL |
| 7-4 | R7 | 70+25.50 | 4.00 | L+ | 31.16 | BACK OF RAMP |
| 7-5 | R7 | 70+25.50 | 8.50 | L+ | 31.22 | BOS |
| 7-6 | R7 | 70+30.00 | 0 | | 30.81 | FL |
| 7-7 | R7 | 70+30.00 | 4.00 | L+ | 31.10 | BACK OF RAMP |
| 7-8 | R7 | 70+30.00 | 8.20 | L+ | 31.16 | BOS |
| 7-9 | R7 | 70+35.00 | 0.13 | L+ | 31.01 | TC |
| 7-10 | R7 | 70+35.00 | 8.10 | L+ | 31.14 | BOS |
| 8-1 | R8 | 80+12.75 | 0.13 | L+ | 31.04 | TC |
| 8-2 | R8 | 80+12.75 | 7.25 | L+ | 31.13 | BOS |
| 8-3 | R8 | 80+17.25 | 0 | | 30.79 | FL |
| 8-4 | R8 | 80+17.25 | 4.00 | L+ | 31.09 | BACK OF RAMP |
| 8-5 | R8 | 80+17.25 | 8.05 | L+ | 31.15 | BOS |
| 8-6 | R8 | 80+22.25 | 0 | | 30.86 | FL |
| 8-7 | R8 | 80+22.25 | 4.00 | L+ | 31.16 | BACK OF RAMP |
| 8-8 | R8 | 80+22.25 | 8.05 | L+ | 31.22 | BOS |
| 8-9 | R8 | 80+30.75 | 0.13 | L+ | 31.63 | TC |
| 8-10 | R8 | 80+30.75 | 6.05 | L+ | 31.69 | BOS |
| 8-11 | R8 | 80+36.00 | 0.13 | L+ | 31.89 | TC |
| 8-12 | R8 | 80+36.00 | 6.30 | L+ | 31.93 | BOS |

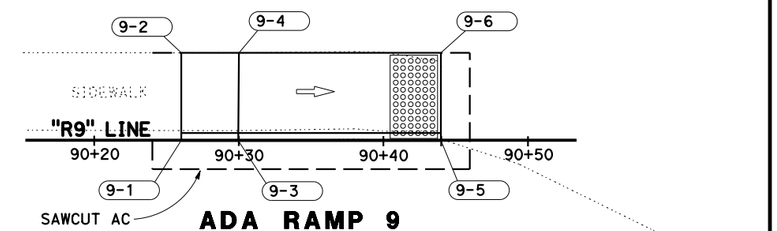


**ADA RAMP 9**
**CASE A, MODIFIED**

ROUTE 101

**LOCATION 3**
**PM 121.39**

| POINT NAME | ALIGNMENT LINE | STATION STA | OFFSET FT | L+/R+ | ELEVATION FT | REMARKS |
|---|---|---|---|---|---|---|
| 9-1 | R9 | 90+26.00 | 0.13 | L+ | 32.35 | TC |
| 9-2 | R9 | 90+26.00 | 6.10 | L+ | 32.48 | BOS |
| 9-3 | R9 | 90+30.00 | 0.13 | | 32.35 | TC |
| 9-4 | R9 | 90+30.00 | 6.10 | L+ | 32.41 | BOS |
| 9-5 | R9 | 90+44.00 | 0 | L+ | 31.67 | FL |
| 9-6 | R9 | 90+44.00 | 6.10 | L+ | 31.73 | BOS |

| LOCATION PM | L+/R+ | W FT |
|---|---|---|
| 120.95 | L+ | 20 |
| 121.03 | L+ | 22 |
| 121.29 | L+ | 20 |

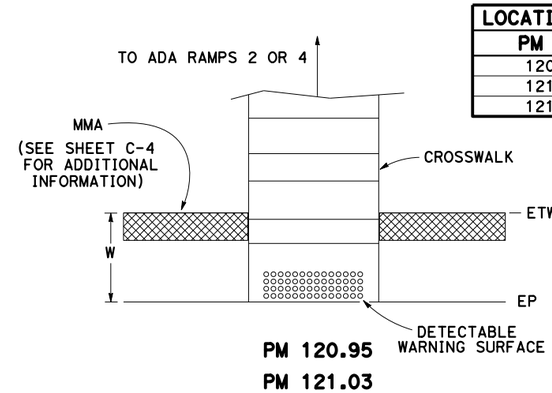


PM 120.95
PM 121.03

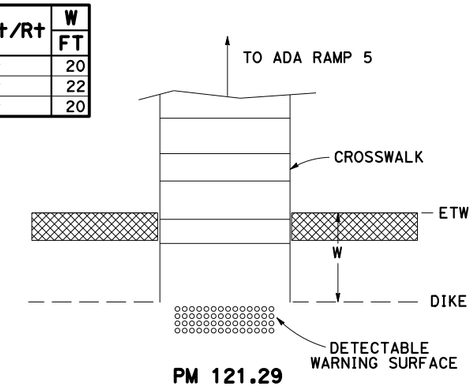


PM 121.29

**DETECTABLE WARNING SURFACE**

# CONSTRUCTION DETAILS

SCALE: 1" = 5'

C-8

ROBERT KING | KELLY B. TIMMONS | REVISED BY | DATE REVISED
CALCULATED-DESIGNED BY | CHECKED BY
FUNCTIONAL SUPERVISOR | KELLY B. TIMMONS
STATE OF CALIFORNIA - DEPARTMENT OF TRANSPORTATION
Caltrans DESIGN

P:\PROJ\01\41500\drafting\sheets\0113000127ga008.dgn

LAST REVISION 00-00-00 | DATE PLOTTED => 17-AUG-2016 | TIME PLOTTED => 09:22

| Dist | COUNTY | ROUTE | POST MILES TOTAL PROJECT | SHEET No. | TOTAL SHEETS |
|---|---|---|---|---|---|
| 01 | Hum | 101 | 109.5/R125.8 | 12 | 100 |

Robert King 5-5-16
REGISTERED CIVIL ENGINEER DATE

May 23, 2016
PLANS APPROVAL DATE

REGISTERED PROFESSIONAL ENGINEER ROBERT W. KING No. C-58530 Exp. 12-31-16 CIVIL STATE OF CALIFORNIA

THE STATE OF CALIFORNIA OR ITS OFFICERS OR AGENTS SHALL NOT BE RESPONSIBLE FOR THE ACCURACY OR COMPLETENESS OF SCANNED COPIES OF THIS PLAN SHEET.

**NOTES:**

1. STANDARD 6' POST CAN BE WOOD OR STEEL, SEE Std PLAN A77L1 AND A77L2 FOR ADDITIONAL DETAILS NOT SHOWN ON THIS PLAN.
2. CRT POST MUST BE WOOD.
3. SPLICE LOCATION OF MGS WILL NOT EFFECT SPAN.
4. GUARDRAIL ELEMENTS TO BE STANDARD 12'-6" LENGTH BETWEEN SPLICES.
5. IF MORE THAN ONE POST IS SKIPPED, THE USE OF THIS DETAIL REQURIES A 50' MINIMUM LENGTH OF STANDARD GUARDRAIL BEFORE ANOTHER POST CAN BE SKIPPED, A TERMINAL CAN BE PLACED, OR ANY SPECIAL GUARDRAIL FEATURE IS USED.
6. EXISTING UTILITY FACILITIES HAVE NOT BEEN PLOTTED ON THESE PLANS.

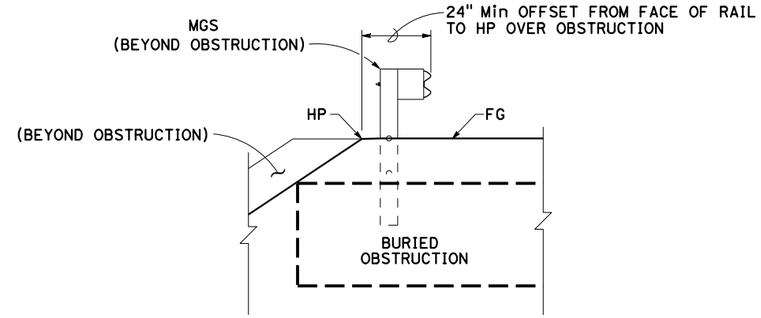


**SECTION A-A**

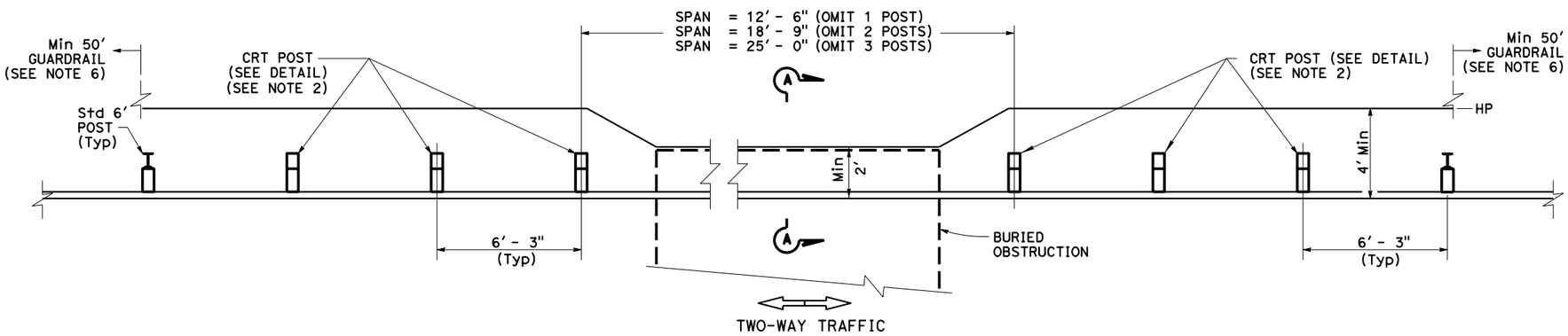


**PLAN VIEW**

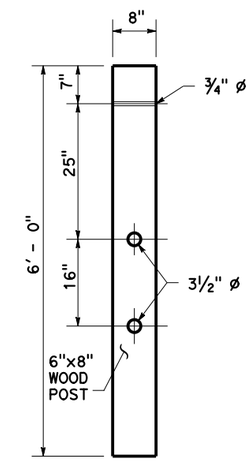


**CONTROLLED RELEASING TERMINAL (CRT) POST DETAIL**

SEE NOTE 2

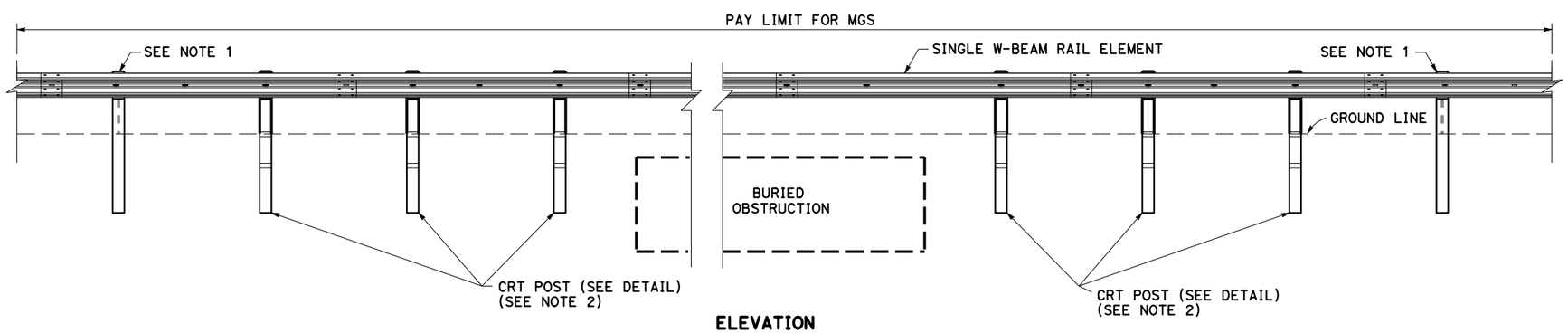


**ELEVATION**

SEE NOTE 6

**MIDWEST GUARDRAIL SYSTEM OMIT 1 TO 3 POSTS**

**CONSTRUCTION DETAILS**

NO SCALE

C-9

REVISED BY | DATE REVISED
ROBERT KING | KELLY B. TIMMONS
CALCULATED-DESIGNED BY | CHECKED BY
FUNCTIONAL SUPERVISOR | KELLY B. TIMMONS

STATE OF CALIFORNIA - DEPARTMENT OF TRANSPORTATION
Caltrans
DESIGN

P:\PROJ\01\41500\drafting\sheets\0113000127ga009.dgn

LAST REVISION 00-00-00 | DATE PLOTTED => 17-AUG-2016 | TIME PLOTTED => 09:22

| Dist | COUNTY | ROUTE | POST MILES TOTAL PROJECT | SHEET No. | TOTAL SHEETS |
|---|---|---|---|---|---|
| 01 | Hum | 101 | 109.5/R125.8 | 13 | 100 |

Robert King 5-5-16
REGISTERED CIVIL ENGINEER DATE

May 23, 2016
PLANS APPROVAL DATE

REGISTERED PROFESSIONAL ENGINEER ROBERT W. KING No. C-58530 Exp. 12-31-16 CIVIL STATE OF CALIFORNIA

*THE STATE OF CALIFORNIA OR ITS OFFICERS OR AGENTS SHALL NOT BE RESPONSIBLE FOR THE ACCURACY OR COMPLETENESS OF SCANNED COPIES OF THIS PLAN SHEET.*

**NOTES:**

1. 7'-0" WOOD POSTS TO BE USED WHERE THE DISTANCE BETWEEN THE FACE OF THE RAIL AND THE HINGE POINT IS 2'-0" TO 3'-0".
2. BOLT PATTERN VARIES. FIT AND DRILL IN FIELD.
3. EXISTING UTILITY FACILITIES HAVE NOT BEEN PLOTTED ON THESE PLANS.

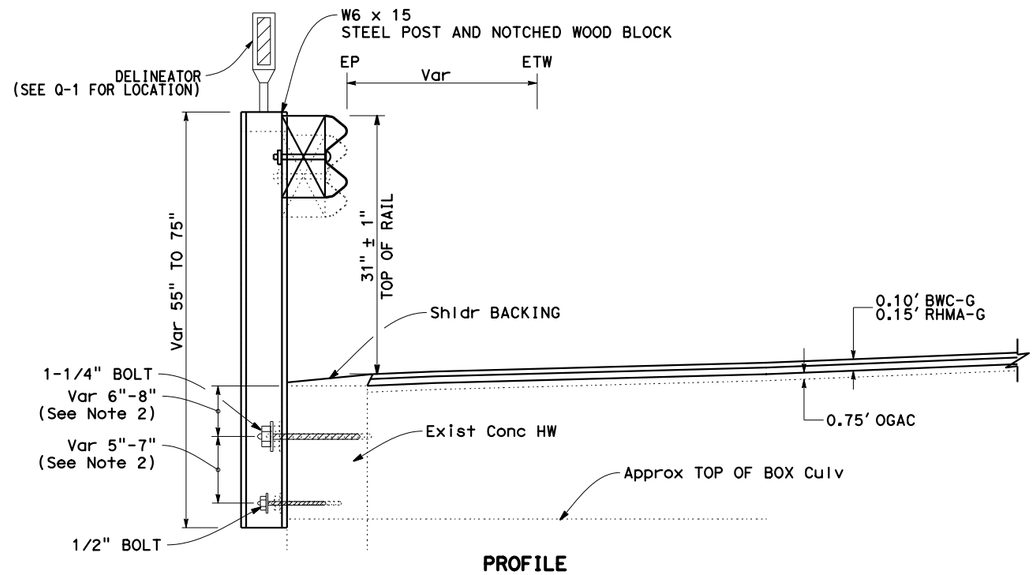


PROFILE

## MGS (SPECIAL)

PM 114.71 TO 114.72 Lt, Rt
PM 124.48 TO 124.49 Lt, Rt

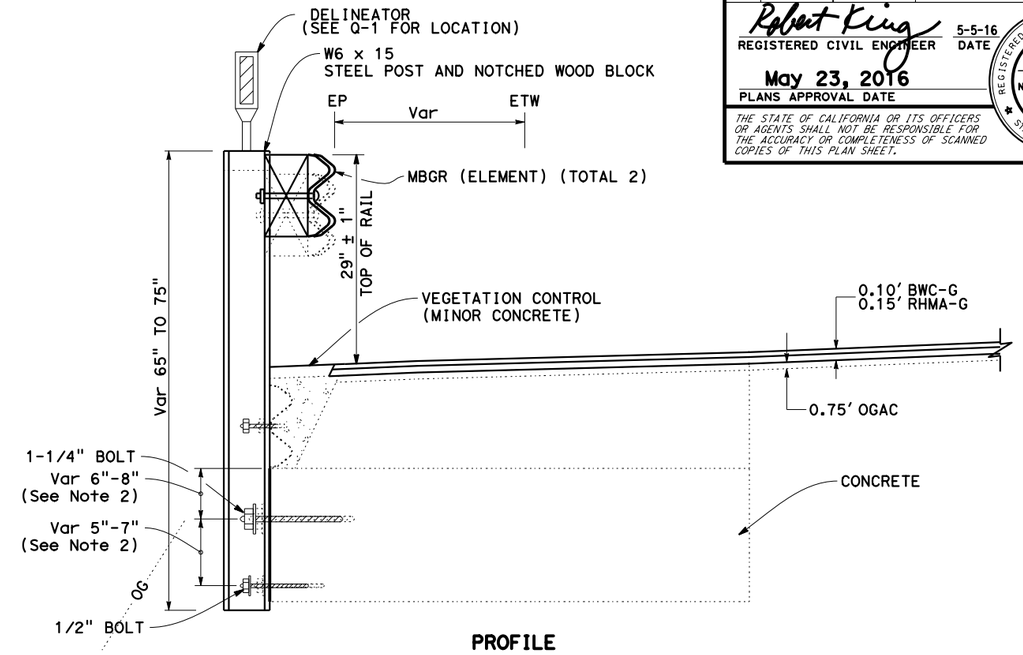


PROFILE

## RECONSTRUCT MBGR (SPECIAL)

PM 111.94 TO PM 111.97 Lt

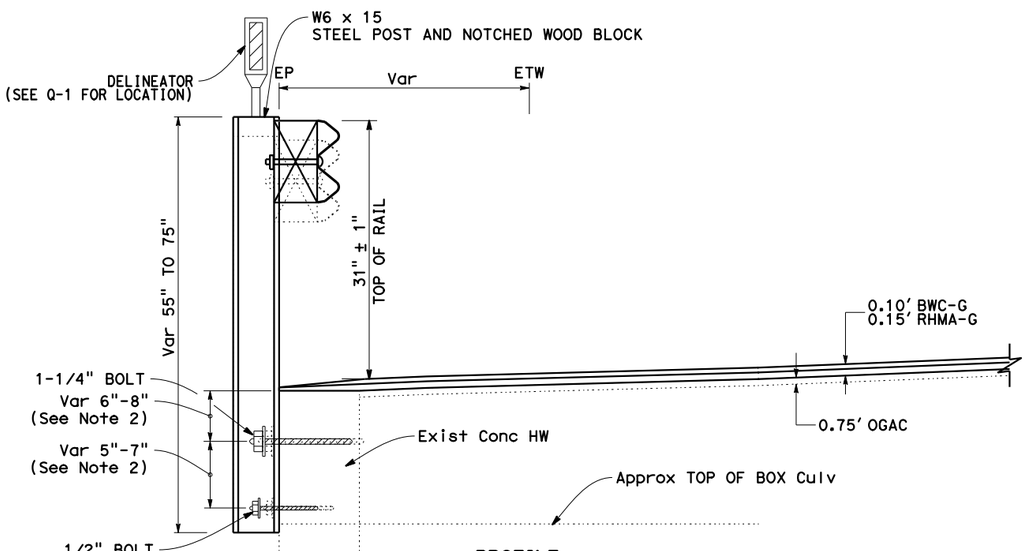


PROFILE

## MGS (SPECIAL)

PM 114.54 TO 114.55 Lt, Rt

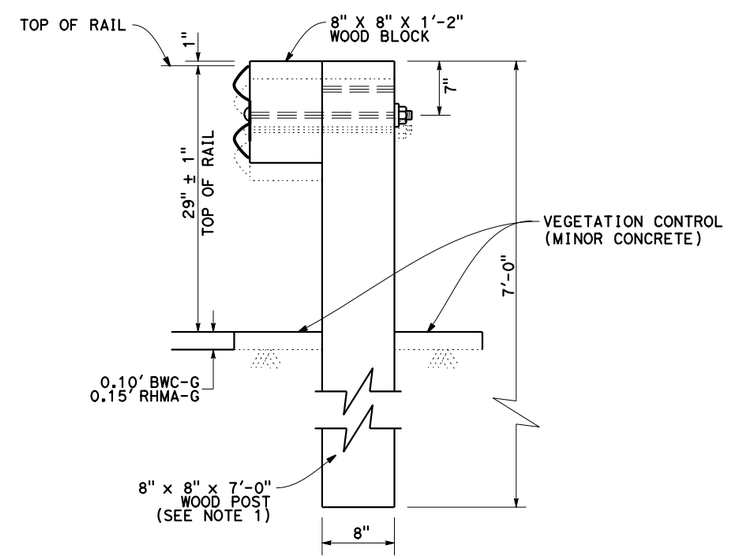


## RECONSTRUCT GUARDRAIL (7' POST)

# CONSTRUCTION DETAILS

NO SCALE

C-10

| REVISED BY | DATE REVISED |
|---|---|
| | |

ROBERT KING — KELLY B. TIMMONS — CALCULATED-DESIGNED BY
KELLY B. TIMMONS — CHECKED BY
KELLY B. TIMMONS — FUNCTIONAL SUPERVISOR

STATE OF CALIFORNIA - DEPARTMENT OF TRANSPORTATION
Caltrans DESIGN

P:\PROJ\01\41500\drafting\sheets\0113000127ga010.dgn

LAST REVISION 00-00-00 | DATE PLOTTED => 17-AUG-2016 | TIME PLOTTED => 09:22

| Dist | COUNTY | ROUTE | POST MILES TOTAL PROJECT | SHEET No. | TOTAL SHEETS |
|---|---|---|---|---|---|
| 01 | Hum | 101 | 109.5/R125.8 | 14 | 100 |

Robert King 5-5-16
REGISTERED CIVIL ENGINEER DATE

May 23, 2016
PLANS APPROVAL DATE

REGISTERED PROFESSIONAL ENGINEER ROBERT W. KING No. C-58530 Exp. 12-31-16 CIVIL STATE OF CALIFORNIA

*THE STATE OF CALIFORNIA OR ITS OFFICERS OR AGENTS SHALL NOT BE RESPONSIBLE FOR THE ACCURACY OR COMPLETENESS OF SCANNED COPIES OF THIS PLAN SHEET.*

**NOTES:**

1. FOR DETAILS NOT SHOWN, SEE STANDARD PLAN SHEET D-87-B.
2. 20' LENGTH OF GUTTER ON BOTH SIDES IN A SAG LOCATION.
3. EXISTING UTILITY FACILITIES HAVE NOT BEEN PLOTTED ON THESE PLANS.

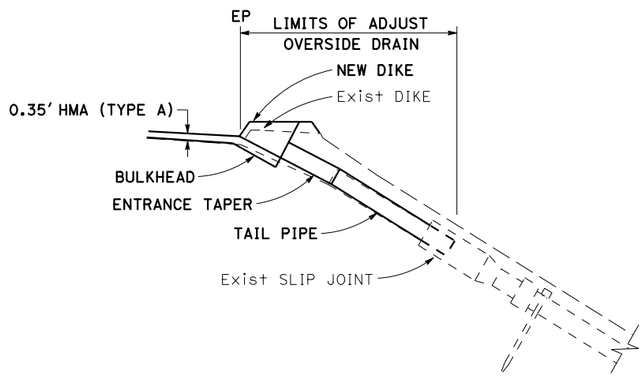


**CROSS SECTION**

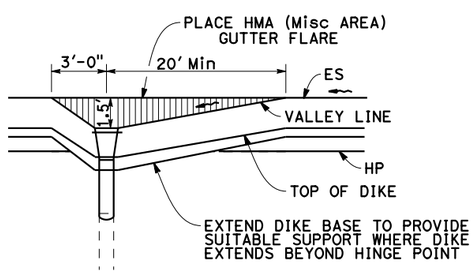


**PLAN VIEW**

**ADJUST OVERSIDE DRAIN**

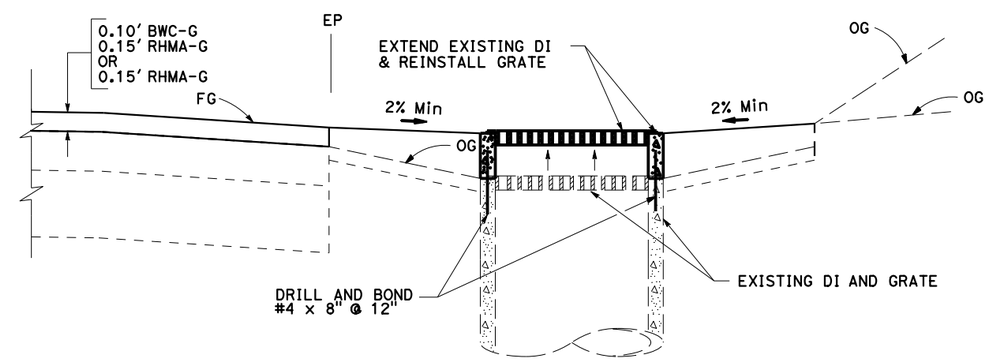


**ADJUST DRAINAGE INLET**

# DRAINAGE DETAILS

NO SCALE

**DD-1**

| REVISED BY | DATE REVISED |
|---|---|
| ROBERT KING | KELLY B. TIMMONS |
| CALCULATED-DESIGNED BY | CHECKED BY |
| FUNCTIONAL SUPERVISOR | KELLY B. TIMMONS |

STATE OF CALIFORNIA - DEPARTMENT OF TRANSPORTATION
Caltrans
DESIGN

P:\PROJ\01\41500\drafting\sheets\01130001271c001.dgn

LAST REVISION 00-00-00
DATE PLOTTED => 17-AUG-2016
TIME PLOTTED => 09:22

| Dist | COUNTY | ROUTE | POST MILES TOTAL PROJECT | SHEET No. | TOTAL SHEETS |
|---|---|---|---|---|---|
| 01 | Hum | 101 | 109.5/R125.8 | 15 | 100 |

Robert King 5-5-16
REGISTERED CIVIL ENGINEER DATE

May 23, 2016
PLANS APPROVAL DATE

REGISTERED PROFESSIONAL ENGINEER ROBERT W. KING No. C-58530 Exp. 12-31-16 CIVIL STATE OF CALIFORNIA

*THE STATE OF CALIFORNIA OR ITS OFFICERS OR AGENTS SHALL NOT BE RESPONSIBLE FOR THE ACCURACY OR COMPLETENESS OF SCANNED COPIES OF THIS PLAN SHEET.*

**NOTES:**

1. EXISTING UTILITY FACILITIES HAVE NOT BEEN PLOTTED ON THIS PLAN.
2. (N) NOT A SEPARATE PAY ITEM. FOR INFORMATION ONLY.

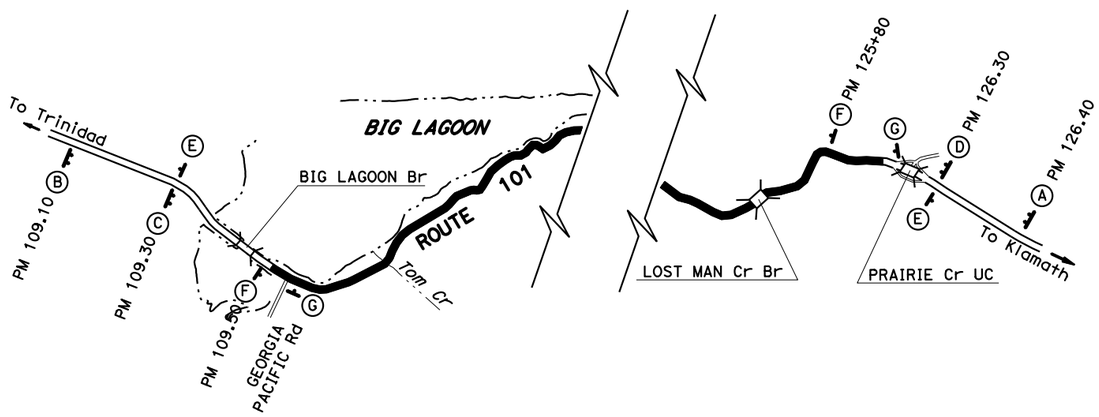


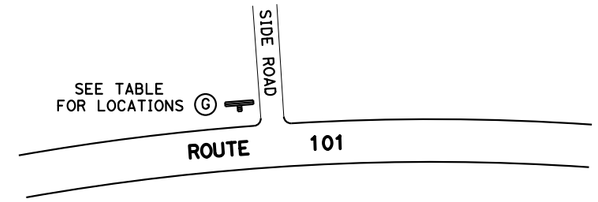


## TYPICAL ROAD WORK AHEAD SIGN PLACEMENT

## STATIONARY MOUNTED CONSTRUCTION AREA SIGNS

| ○ | TYPE | SIGN MESSAGE | PANEL SIZE | No. OF POSTS AND SIZE | No. OF SIGNS (N) |
|---|---|---|---|---|---|
| A | C40(CA) | TRAFFIC FINES DOUBLED IN CONSTRUCTION ZONE | 144" x 60" | 2 - 6" x 8" | 1 |
| B | C40(CA) | TRAFFIC FINES DOUBLED IN CONSTRUCTION ZONE | 108" x 42" | 2 - 6" x 6" | 1 |
| C | G20-1 | ROAD WORK NEXT 17 MILES | 60" x 36" | 2 - 4" x 6" | 1 |
| D | G20-1 | ROAD WORK NEXT 17 MILES | 90" x 48" | 2 - 6" x 6" | 1 |
| E | G20-2 | END ROAD WORK | 36" x 18" | 1 - 4" x 4" | 2 |
| F | W11-1 | BICYCLE SYMBOL | 36" x 36" | 1 - 4" x 6" | 2 |
| | W16-1 | SHARE THE ROAD | 24" x 30" | | 2 |
| G | G20-1 | ROAD WORK AHEAD | 36" x 36" | 1 - 4" x 6" | 31 |

(N) - NOT A SEPARATE PAY ITEM. FOR INFORMATION ONLY.

## SIGN LOCATIONS ROAD WORK AHEAD (W20-1)

| LOCATION (PM) | R+/L+ | STREET NAME |
|---|---|---|
| 109.55 | R+ | GEORGIA PACIFIC Rd |
| 112.54 | R+ | KANE Rd |
| 112.63 | L+ | BEACH ACCESS Rd |
| 114.46 | R+ | MCDONALD CREEK Rd |
| 114.46 | L+ | MCDONALD CREEK Rd |
| 114.58 | R+ | REDWOOD TRAILS Cir |
| 114.50 | R+ | REDWOOD TRAILS Cir |
| 116.85 | R+ | OLD STAGE Rd |
| 117.37 | L+ | BEACH ACCESS Rd |
| 118.83 | L+ | BEACH ACCESS Rd |
| 119.01 | L+ | REDWOOD CREK BEACH COUNTY PARK ACCESS |
| 119.95 | L+ | REFUSE DISPOSAL SITE Rd |
| 119.99 | R+ | OLD STAGE Rd |
| 120.11 | R+ | HILTONS Rd |
| 120.11 | L+ | FOSTER Ln |
| 120.81 | L+ | LUNDBLADE St |
| 121.00 | L+ | LOWELL St |
| 121.04 | R+ | DRYDENS Rd |
| 121.05 | L+ | TOAD Ln |
| 121.18 | L+ | HUFFORD Ln |
| 121.32 | R+ | GRIFFIN Rd |
| 121.68 | L+ | ORICK HILLS Rd |
| 122.11 | L+ | RIVER VIEW Ln |
| 122.25 | R+ | BALD HILLS Rd |
| 122.68 | L+ | ROBINSON Rd |
| 122.89 | R+ | PRAIRIE CREEK CAMP Rd |
| 123.82 | L+ | DAVIDSON Rd |
| 124.03 | L+ | VALLEY GREEN CAMP Rd |
| 124.42 | R+ | Rd TO SIMPSON LOG SCALE |
| 124.60 | L+ | PRIVATE ROAD |
| 126.00 | L+ | EXPRESSWAY ON RAMP |

*APPROVED FOR CONSTRUCTION AREA SIGN WORK ONLY*

# CONSTRUCTION AREA SIGNS

NO SCALE

**CS-1**

| REVISED BY | DATE REVISED |
|---|---|
| | |

| CALCULATED-DESIGNED BY | CHECKED BY |
|---|---|
| ROBERT KING | KELLY B. TIMMONS |

| FUNCTIONAL SUPERVISOR |
|---|
| KELLY B. TIMMONS |

STATE OF CALIFORNIA - DEPARTMENT OF TRANSPORTATION
Caltrans
DESIGN

P:\PROJ\01\41500\drafting\sheets\01130001271a001.dgn

LAST REVISION 00-00-00 | DATE PLOTTED => 17-AUG-2016 | TIME PLOTTED => 09:23

| Dist | COUNTY | ROUTE | POST MILES TOTAL PROJECT | SHEET No. | TOTAL SHEETS |
|---|---|---|---|---|---|
| 01 | Hum | 101 | 109.5/R125.9 | 16 | 100 |

REGISTERED CIVIL ENGINEER 11-13-15 DATE

May 23, 2016
PLANS APPROVAL DATE

REGISTERED PROFESSIONAL ENGINEER SHERI M. RODRIGUEZ No. C66861 Exp. 9-30-16 CIVIL STATE OF CALIFORNIA

## NOTES:

1. CALIFORNIA CODES ARE DESIGNATED BY (CA). OTHERWISE, FEDERAL (MUTCD) CODES ARE SHOWN.
2. ALL SIGNS SHALL HAVE A BLACK LEGEND ON FLUORESCENT ORANGE BACKGROUND AND SHALL BE EQUIPPED WITH AT LEAST TWO 16" x 16" ORANGE FLAGS FOR DAYTIME CLOSURE OR FLASHING BEACONS FOR LANE CLOSURE DURING HOURS OF DARKNESS.
3. ALL CONES USED FOR LANE CLOSURES DURING THE HOURS OF DARKNESS SHALL BE FITTED WITH RETROREFLECTIVE BANDS OR SLEEVES.
4. WHEN A PILOT CAR IS USED, PLACE A C37 (CA) SIGN AT ALL INTERSECTIONS WITHIN TRAFFIC CONTROL AREA. WHERE VEHICULAR TRAFFIC CAN NOT EFFECTIVELY SELF-REGULATE, AT LEAST ONE FLAGGER SHALL BE USED AT EACH INTERSECTION WITHIN THE TRAFFIC CONTROL AREA.
5. FLAGGER SHOULD STAND IN A CONSPICUOUS PLACE, FACING TRAFFIC AT ALL TIMES, BE VISIBLE TO APPROACHING TRAFFIC AS WELL AS APPROACHING VEHICLES AFTER THE FIRST VEHICLE HAS STOPPED.
6. ADDITIONAL ADVANCE FLAGGERS ARE REQUIRED DURING HOURS OF DAYLIGHT. A FULL MATRIX PCMS IN PLACE OF EACH ADVANCE FLAGGER REQUIRED DURING HOURS OF DARKNESS.
7. WHEN FLAGGER IS NOT VISIBLE FROM THIS LOCATION PLACE A C29 (CA) SIGN BELOW THE C9A (CA) SIGN.
8. EXISTING UTILITY FACILITIES HAVE NOT BEEN PLOTTED ON THESE PLANS.

## LEGEND

- TRAFFIC CONE
- TEMPORARY SIGN
- DIRECTION OF TRAVEL
- PORTABLE FLASHING BEACON
- FLAGGER

## SIGN PANEL SIZE (MINIMUM)

- [A] 48" x 48" - SPEED OF 45 mph OR MORE; 36" x 36" - SPEED LESS THAN 45 mph
- [B] 30" x 30"
- [C] UNUSED
- [D] UNUSED
- [E] 20" x 7"

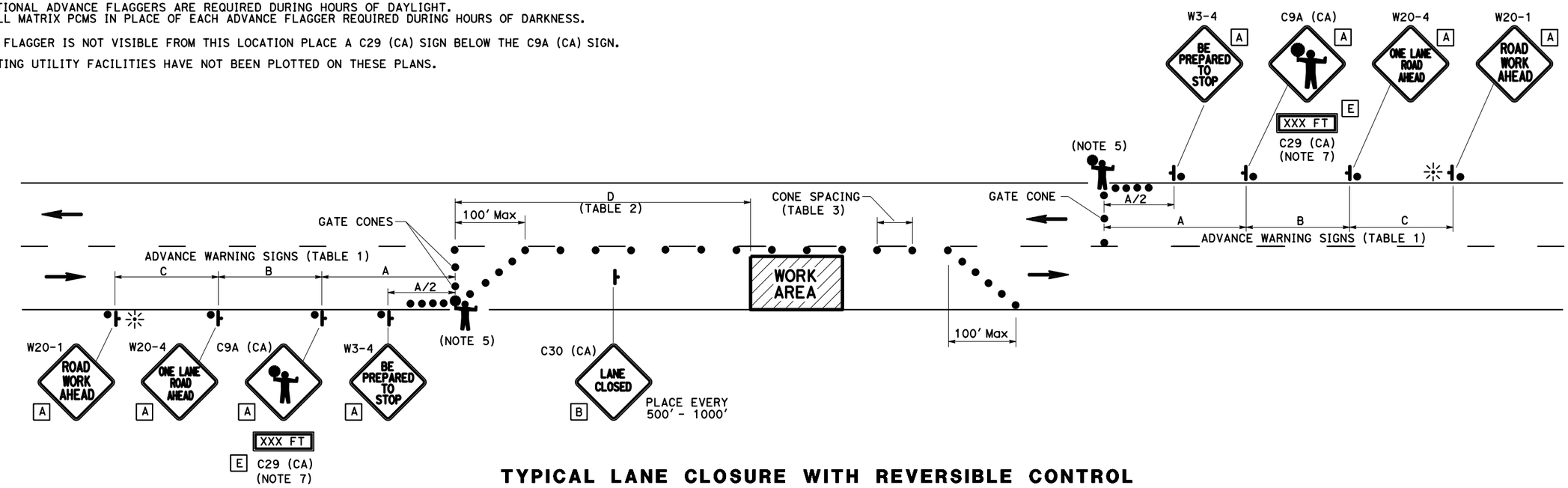


## TYPICAL LANE CLOSURE WITH REVERSIBLE CONTROL

### TABLE 1
ADVANCE WARNING SIGN SPACING

| ROAD TYPE | Min A | Min B | Min C |
|---|---|---|---|
| | ft | | |
| URBAN (25 mph OR LESS) | 100 | 100 | 100 |
| URBAN (30 mph TO 40 mph) | 250 | 250 | 250 |
| URBAN (MORE THAN 40 mph) | 350 | 350 | 350 |
| RURAL | 500 | 500 | 500 |
| EXPRESSWAY / FREEWAY | 1000 | 1500 | 2640 |

### TABLE 2
BUFFER SPACE

| APPROACH SPEED | Min D | DOWNGRADE Min D | | |
|---|---|---|---|---|
| | | -3%* | -6%* | -9%* |
| mph | ft | | | |
| 25 & BELOW | 155 | 158 | 165 | 173 |
| 30 | 200 | 205 | 215 | 227 |
| 35 | 250 | 257 | 271 | 287 |
| 40 | 305 | 315 | 333 | 354 |
| 45 | 360 | 378 | 400 | 427 |
| 50 | 425 | 446 | 474 | 507 |
| 55 | 495 | 520 | 553 | 593 |
| 60 | 570 | 598 | 638 | 686 |
| 65 | 645 | 682 | 728 | 785 |

* USE ON SUSTAINED DOWNGRADE STEEPER THAN -3 PERCENT AND LONGER THAN 1 MILE.

### TABLE 3
Max CONE SPACING

| POSTED SPEED | TAPER | TANGENT | CONFLICT* |
|---|---|---|---|
| mph | ft | | |
| 20 | 20 | 40 | 10 |
| 25 | 25 | 50 | 12 |
| 30 | 30 | 60 | 15 |
| 35 | 35 | 70 | 17 |
| 40 | 40 | 80 | 20 |
| 45 | 45 | 90 | 22 |
| 50 | 50 | 100 | 25 |
| 55 | 55 | 110 | 27 |
| 60 | 60 | 120 | 30 |
| 65 | 65 | 130 | 32 |

* USE WHERE THERE IS A CONFLICT BETWEEN EXISTING PAVEMENT MARKINGS AND CHANNELIZERS.

# TRAFFIC HANDLING PLAN
NO SCALE

TH-1

*APPROVED FOR TRAFFIC HANDLING WORK ONLY*

REVISED BY | DATE REVISED
SHERI M. RODRIGUEZ | TROY A. ARSENEAU
CALCULATED-DESIGNED BY | CHECKED BY
FUNCTIONAL SUPERVISOR: RICHARD MULLEN
STATE OF CALIFORNIA - DEPARTMENT OF TRANSPORTATION
Caltrans TRAFFIC OPERATIONS
P:\PROJ\01\41500\drafting\sheets\0113000127md001.dgn

LAST REVISION 00-00-00 | DATE PLOTTED => 17-AUG-2016 | TIME PLOTTED => 09:23

| Dist | COUNTY | ROUTE | POST MILES TOTAL PROJECT | SHEET No. | TOTAL SHEETS |
|---|---|---|---|---|---|
| 01 | Hum | 101 | 109.5/R125.8 | 17 | 100 |

Robert King 5-5-16
REGISTERED CIVIL ENGINEER DATE

May 23, 2016
PLANS APPROVAL DATE

REGISTERED PROFESSIONAL ENGINEER ROBERT W. KING No. C-58530 Exp. 12-31-16 CIVIL STATE OF CALIFORNIA

*THE STATE OF CALIFORNIA OR ITS OFFICERS OR AGENTS SHALL NOT BE RESPONSIBLE FOR THE ACCURACY OR COMPLETENESS OF SCANNED COPIES OF THIS PLAN SHEET.*

**NOTES:**

1. EXACT LOCATION OF K-RAIL AND CHANNELIZERS TO BE DETERMINED BY THE ENGINEER.
2. EXISTING UTILITY FACILITIES HAVE NOT BEEN PLOTTED ON THESE PLANS.

**LEGEND:**

● = CHANNELIZER (SURFACE MOUNTED)

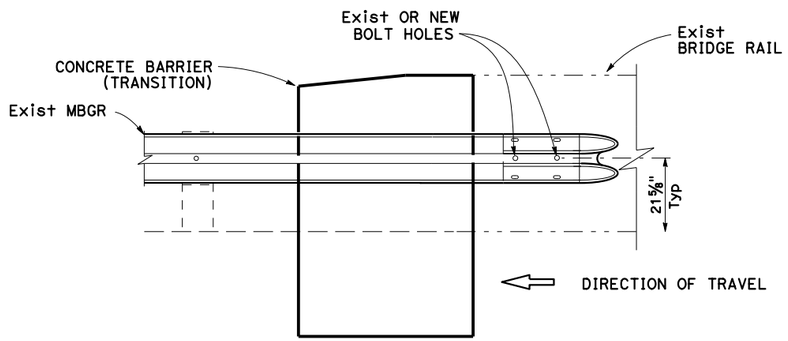


**ELEVATION**

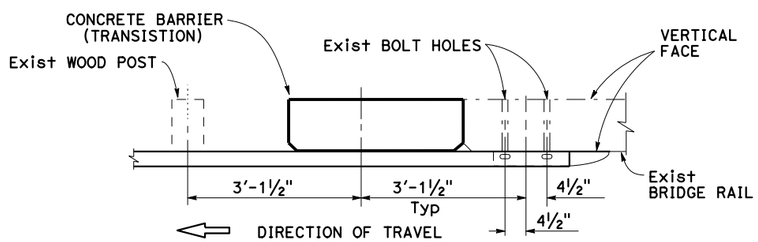


**PLAN**

**PM 122.86 PRAIRIE CREEK BRIDGE (04-0029)**
**PM 124.71 LOST MAN CREEK BRIDGE (04-0030)**

## TRAFFIC HANDLING QUANTITIES

| LOCATION PM | L+/R+ | CHANNELIZER (SURFACE MOUNTED) | TEMPORARY RAILING (TYPE K) | TEMPORARY CRASH CUSHION SYSTEM |
|---|---|---|---|---|
| | | EA | LF | EA |
| 120.02 | L+ | | 40 | 2 |
| 120.03 | R+ | 7 | 40 | 2 |
| | TOTAL | 7 | 80 | 4 |

DIRECTION OF TRAVEL

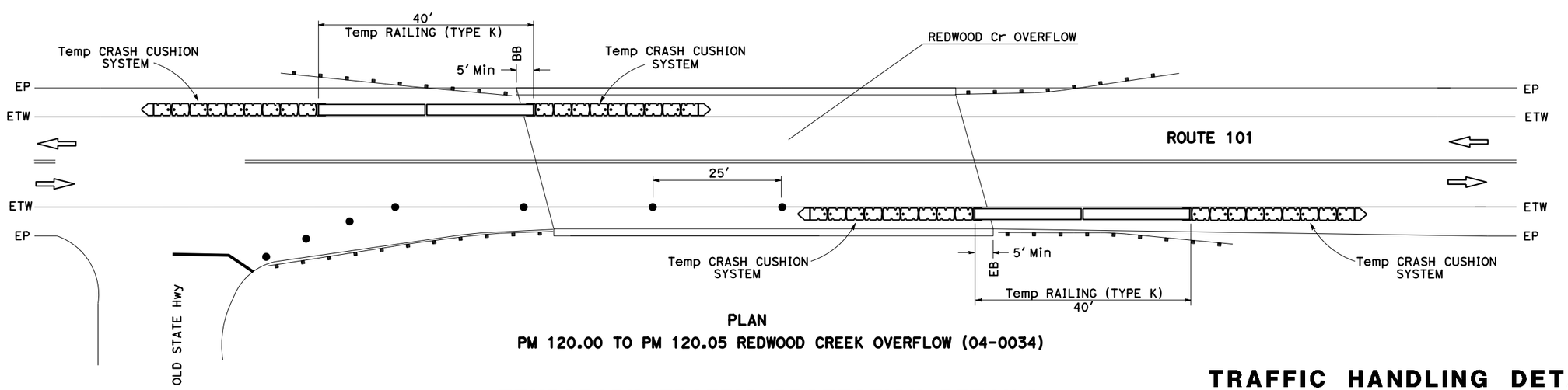


**PLAN**

**PM 120.00 TO PM 120.05 REDWOOD CREEK OVERFLOW (04-0034)**

## TEMPORARY TRAFFIC PROTECTION DETAILS

## TRAFFIC HANDLING DETAILS AND QUANTITIES

NO SCALE

**THD-1**

*APPROVED FOR TRAFFIC HANDLING WORK ONLY*

| REVISED BY | DATE REVISED |
|---|---|
| ROBERT KING | KELLY B. TIMMONS |
| CALCULATED-DESIGNED BY | CHECKED BY |
| FUNCTIONAL SUPERVISOR | KELLY B. TIMMONS |

STATE OF CALIFORNIA - DEPARTMENT OF TRANSPORTATION
Caltrans
DESIGN

P:\PROJ\01\41500\drafting\sheets\0113000127me001.dgn

LAST REVISION 00-00-00
DATE PLOTTED => 17-AUG-2016
TIME PLOTTED => 09:23

| Dist | COUNTY | ROUTE | POST MILES TOTAL PROJECT | SHEET No. | TOTAL SHEETS |
|---|---|---|---|---|---|
| 01 | Hum | 101 | 109.5/R125.8 | 18 | 100 |

Robert King 5-5-16
REGISTERED CIVIL ENGINEER DATE

May 23, 2016
PLANS APPROVAL DATE

REGISTERED PROFESSIONAL ENGINEER ROBERT W. KING No. C-58530 Exp. 12-31-16 CIVIL STATE OF CALIFORNIA

*THE STATE OF CALIFORNIA OR ITS OFFICERS OR AGENTS SHALL NOT BE RESPONSIBLE FOR THE ACCURACY OR COMPLETENESS OF SCANNED COPIES OF THIS PLAN SHEET.*

**NOTE:**

EXISTING UTILITY FACILITIES HAVE NOT BEEN PLOTTED ON THESE PLANS.

**LEGEND**

TYPE D TWO-WAY YELLOW RETROREFLECTIVE MARKER

4" YELLOW TRAFFIC STRIPE

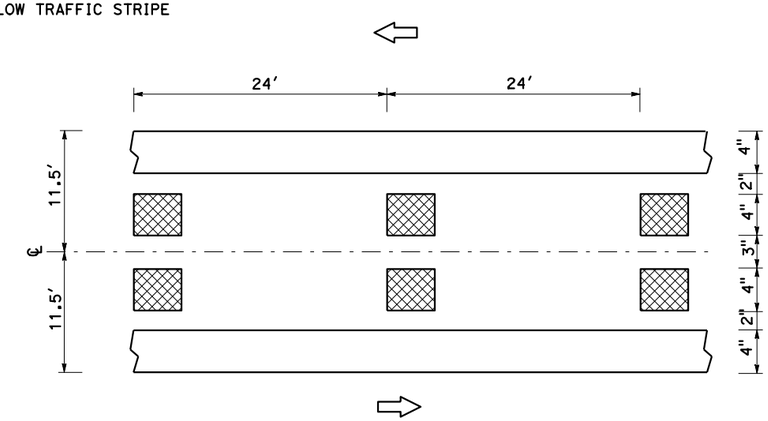


## DETAIL 22 MODIFIED

PM 120.09 TO PM 120.62

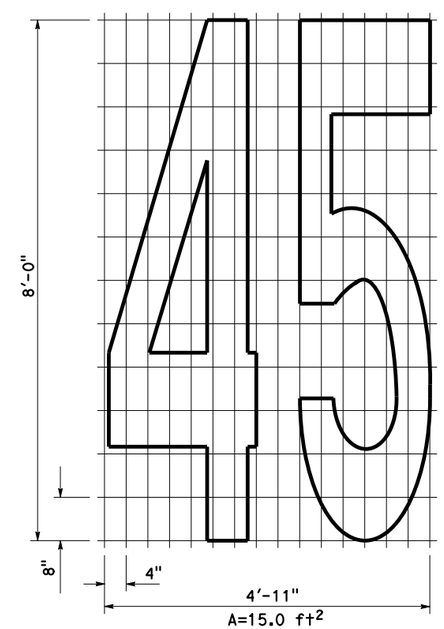


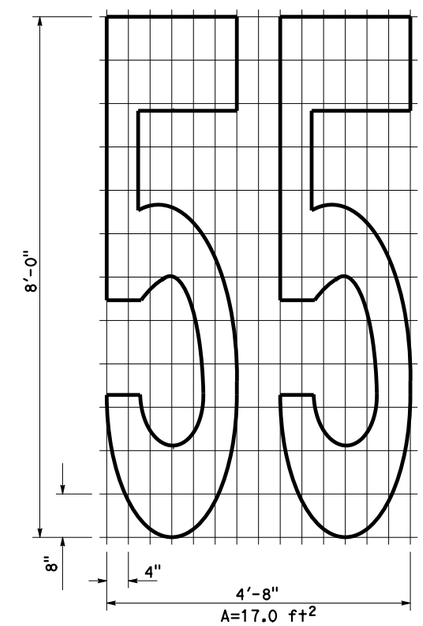


## PAVEMENT DELINEATION DETAILS

NO SCALE

**PDD-1**

REVISED BY | DATE REVISED

ROBERT KING | KELLY B. TIMMONS

CALCULATED-DESIGNED BY | CHECKED BY

FUNCTIONAL SUPERVISOR: KELLY B. TIMMONS

STATE OF CALIFORNIA - DEPARTMENT OF TRANSPORTATION

Caltrans® DESIGN

P:\PROJ\01\41500\drafting\sheets\0113000127nb001.dgn

LAST REVISION 00-00-00 | DATE PLOTTED => 17-AUG-2016 | TIME PLOTTED => 09:23

| Dist | COUNTY | ROUTE | POST MILES TOTAL PROJECT | SHEET No. | TOTAL SHEETS |
|---|---|---|---|---|---|
| 01 | Hum | 101 | 109.5/R125.8 | 19 | 100 |

Robert King 5-5-16
REGISTERED CIVIL ENGINEER DATE

May 23, 2016
PLANS APPROVAL DATE

REGISTERED PROFESSIONAL ENGINEER ROBERT W. KING No. C-58530 Exp. 12-31-16 CIVIL STATE OF CALIFORNIA

THE STATE OF CALIFORNIA OR ITS OFFICERS OR AGENTS SHALL NOT BE RESPONSIBLE FOR THE ACCURACY OR COMPLETENESS OF SCANNED COPIES OF THIS PLAN SHEET.

**NOTE:**

(N) NOT A SEPARATE PAY ITEM. FOR INFORMATION ONLY.

# PAVEMENT DELINEATION

| LOCATION PM FROM | LOCATION PM TO | DETAIL No. | L+/R+ /CL | DETAIL LENGTH LF | REMOVE PAVEMENT MARKER (N) EA | THERMOPLASTIC TRAFFIC STRIPE 8" LF | THERMOPLASTIC TRAFFIC STRIPE 4" LF | THERMOPLASTIC TRAFFIC STRIPE 4" (BROKEN 6-1) LF | THERMOPLASTIC TRAFFIC STRIPE 4" (BROKEN 12-3) LF | THERMOPLASTIC TRAFFIC STRIPE 4" (BROKEN 36-12) LF | PAVEMENT MARKER (RETROFEFLECTIVE) TYPE A EA | PAVEMENT MARKER (RETROFEFLECTIVE) TYPE D EA | PAVEMENT MARKER (RETROFEFLECTIVE) TYPE G EA | TEMPORARY TRAFFIC STRIPE (PAINT) 4" WHITE LF | TEMPORARY TRAFFIC STRIPE (PAINT) 4" YELLOW LF | REMARKS |
|---|---|---|---|---|---|---|---|---|---|---|---|---|---|---|---|---|
| 109.56 | 111.30 | 27B | R+ | 9,187 | | | 9,187 | | | | | | | 9,187 | | |
| 109.56 | 111.17 | 27B | L+ | 8,480 | | | 8,480 | | | | | | | 8,480 | | |
| 109.56 | 109.58 | 38 | L+ | 100 | 6 | 100 | | | | | | | 6 | 200 | | |
| 109.56 | 109.60 | 22 | CL | 185 | 18 | | 370 | | | | | 18 | | | 370 | |
| 109.60 | 109.68 | 29 | CL | 417 | 38 | | 1,672 | | | | | 38 | | | 1,672 | |
| 109.68 | 111.30 | 22 | CL | 8,570 | 718 | | 17,140 | | | | | 718 | | | 17,140 | |
| 111.17 | 111.24 | 38A | L+ | 364 | | 364 | | | | | | | | 728 | | |
| 111.25 | 111.30 | 27B | L+ | 269 | | | 269 | | | | | | | 269 | | |
| 111.70 | 112.51 | 27B | R+ | 4,277 | | | 4,277 | | | | | | | 4,277 | | |
| 111.70 | 112.53 | 22 | CL | 4,382 | 368 | | 8,764 | | | | | 368 | | | 8,764 | |
| 111.70 | 112.61 | 27B | L+ | 4,805 | | | 4,805 | | | | | | | 4,805 | | |
| 112.51 | 112.57 | 27C | R+ | 280 | | | | | 280 | | | | | 280 | | |
| 112.53 | 112.53 | 21 | R+ | 26 | | | 52 | | | | | | | | 52 | KANE Rd |
| 112.54 | 112.63 | 22 | CL | 486 | 44 | | 972 | | | | | 44 | | | 972 | |
| 112.57 | 114.25 | 27B | R+ | 8,865 | | | 8,865 | | | | | | | 8,865 | | |
| 112.61 | 112.66 | 27C | L+ | 238 | | | | | 238 | | | | | 238 | | |
| 112.64 | 112.64 | 21 | L+ | 32 | | | 64 | | | | | | | | 64 | BEACH ACCESS |
| 112.64 | R112.70 | 22 | CL | 301 | 28 | | 602 | | | | | 28 | | | 602 | |
| 112.66 | T114.26 | 27B | L+ | 8,448 | | | 8,448 | | | | | | | 8,448 | | |
| R112.70 | R112.75 | 29 | CL | 275 | 26 | | 1,100 | | | | | 26 | | | 1,100 | |
| R112.73 | R112.77 | 22 | CL | 100 | 12 | | 202 | | | | | 12 | | 5,702 | | |
| R112.75 | R113.81 | 11&13 | R+ | 5,702 | 596 | | | | | 5,702 | 476 | | 120 | | 422 | |
| R112.77 | 114.24T | 29 | CL | 7,762 | 650 | | 31,048 | | | | | 650 | | | 31,048 | |
| R113.06 | T114.12 | 11&13 | L+ | 5,597 | 586 | | | | | 5,597 | 468 | | 118 | 5,597 | | |
| T114.24 | T114.27 | 22 | CL | 158 | 16 | | 318 | | | | | 16 | | | 318 | |
| T114.25 | T114.27 | 27C | R+ | 148 | | | | | 148 | | | | | 148 | | |
| T114.25 | T114.27 | 38 | R+ | 100 | 6 | 100 | | | | | | | 6 | 200 | | |
| T114.26 | T114.27 | 27C | L+ | 74 | | | | | 74 | | | | | | | |
| T114.45 | 114.48 | 27C | R+ | 158 | | | | | 158 | | | | | 158 | | |
| T114.45 | 114.48 | 27C | L+ | 164 | | | | | 164 | | | | | 164 | | |
| 114.46 | 114.46 | 21 | L+/R+ | 46 | | | 92 | | | | | | | | 92 | McDONALD Cr Rd |
| 114.46 | 114.48 | 38 | L+ | 100 | 6 | 100 | | | | | | | 6 | 200 | | |
| 114.46 | 114.48 | 22 | CL | 116 | 12 | | 234 | | | | | 12 | | | 234 | |
| 114.48 | 114.56 | 27B | R+ | 422 | | | 422 | | | | | | | 422 | | |
| 114.48 | 117.34 | 27B | L+ | 15,069 | | | 15,069 | | | | | | | 15,069 | | |
| 114.48 | 114.53 | 29 | CL | 253 | 24 | | 1,016 | | | | | 24 | | | 1,016 | |
| 114.53 | 114.57 | 22 | CL | 190 | 18 | | 382 | | | | | 18 | | | 382 | |
| 114.57 | 114.57 | 21 | R+ | 29 | | | 58 | | | | | | | | 58 | REDWOOD TRAILS Cir |
| 114.58 | 114.74 | 22 | CL | 829 | 72 | | 1,658 | | | | | 72 | | | 1,658 | |
| 114.58 | 114.76 | 27B | R+ | 961 | | | 961 | | | | | | | 961 | | |
| 114.74 | 114.79 | 29 | CL | 275 | 26 | | 1,100 | | | | | 26 | | | 1,100 | |
| 114.80 | 114.80 | 21 | R+ | 25 | | | 50 | | | | | | | | 50 | REDWOOD TRAILS Cir |
| 114.80 | 114.84 | 38 | L+ | 211 | 10 | 211 | | | | | | | 10 | 422 | | |
| 114.80 | 114.85 | 22 | CL | 264 | 24 | | 528 | | | | | 24 | | | 528 | |
| 114.80 | 116.85 | 27B | R+ | 10,824 | | | 10,824 | | | | | | | 10,824 | | |
| 114.85 | 114.91 | 29 | CL | 327 | 30 | | 1,312 | | | | | 30 | | | 1,312 | |
| 114.91 | 116.84 | 22 | CL | 10,153 | 850 | | 20,308 | | | | | 850 | | | 20,308 | |
| 116.50 | 116.78 | 11&13 | R+ | 1,478 | 156 | | | | | 1,478 | 124 | | 32 | 1,478 | | |
| 116.72 | 117.04 | 11&13 | L+ | 1,690 | 181 | | | | | 1,690 | 144 | | 37 | 1,690 | | |
| 116.85 | 116.85 | 21 | R+ | 26 | | | 52 | | | | | | | | 52 | OLD STAGE Rd |
| 116.85 | 117.34 | 22 | CL | 2,614 | 220 | | 5,228 | | | | | 220 | | | 5,228 | |
| 116.86 | 116.89 | 27C | R+ | 158 | | | | | 158 | | | | | 158 | | |
| 116.89 | 119.97 | 27B | R+ | 16,241 | | | 16,241 | | | | | | | 16,241 | | |
| 117.35 | 117.35 | 21 | L+ | 20 | | | 40 | | | | | | | | 40 | BEACH ACCESS |
| | | | | SUBTOTAL | 4,741 | 875 | 182,210 | 0 | 1220 | 14,467 | 1212 | 3,194 | 335 | 105,211 | 94,582 | |

## PAVEMENT DELINEATION QUANTITIES

PDQ-1

REVISED BY | DATE REVISED
ROBERT KING | KELLY B. TIMMONS
CALCULATED-DESIGNED BY | CHECKED BY
FUNCTIONAL SUPERVISOR
KELLY B. TIMMONS

STATE OF CALIFORNIA - DEPARTMENT OF TRANSPORTATION
Caltrans
DESIGN

P:\PROJ\01\41500\drafting\sheets\0113000127nc001.dgn

LAST REVISION 00-00-00 | DATE PLOTTED => 17-AUG-2016 | TIME PLOTTED => 09:23

| Dist | COUNTY | ROUTE | POST MILES TOTAL PROJECT | SHEET No. | TOTAL SHEETS |
|---|---|---|---|---|---|
| 01 | Hum | 101 | 109.5/R125.8 | 20 | 100 |

Robert King 5-5-16
REGISTERED CIVIL ENGINEER DATE

May 23, 2016
PLANS APPROVAL DATE

REGISTERED PROFESSIONAL ENGINEER ROBERT W. KING No. C-58530 Exp. 12-31-16 CIVIL STATE OF CALIFORNIA

THE STATE OF CALIFORNIA OR ITS OFFICERS OR AGENTS SHALL NOT BE RESPONSIBLE FOR THE ACCURACY OR COMPLETENESS OF SCANNED COPIES OF THIS PLAN SHEET.

**NOTE:**
(N) NOT A SEPARATE PAY ITEM. FOR INFORMATION ONLY.

## PAVEMENT DELINEATION (CONTINUED)

| LOCATION PM | | DETAIL No. | L+/R+ /CL | DETAIL LENGTH | REMOVE PAVEMENT MARKER (N) | THERMOPLASTIC TRAFFIC STRIPE | | | | | PAVEMENT MARKER (RETROFEFLECTIVE) | | | TEMPORARY TRAFFIC STRIPE (PAINT) | | REMARKS |
|---|---|---|---|---|---|---|---|---|---|---|---|---|---|---|---|---|
| | | | | | | 8" | 4" | 4" (BROKEN 6-1) | 4" (BROKEN 12-3) | 4" (BROKEN 36-12) | TYPE A | TYPE D | TYPE G | 4" WHITE | 4" YELLOW | |
| FROM | TO | | | LF | EA | LF | LF | LF | LF | LF | EA | EA | EA | LF | LF | |
| 117.35 | 118.45 | 22 | CL | 3,047 | 256 | | 6,094 | | | | | 256 | | | 6,094 | |
| 117.36 | 118.99 | 27B | L+ | 8,596 | | | 8,596 | | | | | | | 8,596 | | |
| 117.93 | 118.04 | 19 | CL | 581 | 48 | | 1,162 | | | | | | 36 | | 1,162 | ALLOW NB PASSING |
| 118.04 | 118.69 | 6 | CL | 3,432 | 284 | | 3,432 | | | | | | | | 3,432 | |
| 118.69 | 118.89 | 19 | CL | 1,056 | 88 | | 2,114 | | | | | | 66 | | 2,114 | ALLOW SB PASSING |
| 118.89 | 119.00 | 22 | CL | 581 | 52 | | 1,162 | | | | | 52 | | | 1,162 | |
| 119.00 | 119.00 | 21 | L+ | 28 | | | 56 | | | | | | | | 56 | REDWOOD Cr BEACH |
| 119.01 | 119.05 | 22 | CL | 216 | 22 | | 434 | | | | | 22 | | | 434 | |
| 119.01 | 119.17 | 27B | L+ | 829 | | | 829 | | | | | | | 829 | | |
| 119.05 | 119.14 | 29 | CL | 444 | 40 | | 1,776 | | | | | 40 | | | 1,776 | |
| 119.14 | 119.17 | 22 | CL | 195 | 20 | | 392 | | | | | 20 | | | 392 | |
| 119.14 | 119.17 | 38 | R+ | 158 | 8 | 158 | | | | | | | 8 | 316 | | |
| 119.18 | 119.18 | 21 | L+ | 77 | | | 154 | | | | | | | | 154 | ENTRANCE Cal Pac MILL |
| 119.19 | 119.28 | 29 | CL | 470 | 42 | | 1,880 | | | | | 42 | | | 1,880 | |
| 119.20 | 119.92 | 27B | L+ | 3770 | | | 3,770 | | | | | | | 3,770 | | |
| 119.28 | 119.92 | 22 | CL | 3384 | 286 | | 6,770 | | | | | 286 | | | 6,770 | |
| 119.92 | 119.92 | 21 | L+ | 28 | | | 56 | | | | | | | | 56 | REFUSE DISPOSAL SITE Rd |
| 119.93 | 119.97 | 22 | CL | 227 | 22 | | 456 | | | | | 22 | | | 456 | |
| 119.93 | 120.76 | 27B | L+ | 4414 | | | 4,414 | | | | | | | 4,414 | | |
| 119.98 | 119.98 | 21 | R+ | 21 | | | 42 | | | | | | | | 42 | OLD STATE HIGHWAY |
| 119.98 | 120.08 | 22 | CL | 533 | 48 | | 1,068 | | | | | 48 | | | 1,068 | |
| 119.98 | 120.08 | 27B | R+ | 496 | | | 496 | | | | | | | 496 | | |
| 120.02 | 121.22 | 27B | R+ | 6331 | | | 6,331 | | | | | | | 6,331 | | |
| 120.09 | 120.09 | 21 | R+ | 21 | | | 42 | | | | | | | | 42 | HILTON Rd |
| 120.09 | 120.62 | 22 Mod | CL | 2804 | 236 | | 5,608 | | | | | 236 | | | 5,608 | |
| 120.09 | 120.91 | 27B | R+ | 4303 | | | 4,303 | | | | | | | 4,303 | | |
| 120.62 | 120.68 | 29 | CL | 285 | 26 | | 1,144 | | | | | 26 | | | 1,144 | |
| 120.68 | 120.77 | 32 | CL | 459 | 53 | | 1,840 | | | | | 53 | | | 1,840 | |
| 120.77 | 120.77 | 21 | L+ | 23 | | | 46 | | | | | | | | 46 | LUNDBLADE St |
| 120.77 | 120.90 | 32 | CL | 671 | 73 | | 2,684 | | | | | 73 | | | 2,684 | |
| 120.78 | 120.90 | 27B | L+ | 655 | | | 655 | | | | | | | 655 | | |
| 120.90 | 120.90 | 21 | L+ | 20 | | | 40 | | | | | | | | 40 | PRIVATE Dr |
| 120.91 | 120.97 | 32 | CL | 296 | 36 | | 1,184 | | | | | 36 | | | 1,184 | |
| 120.91 | 121.00 | 27B | R+ | 454 | | | 454 | | | | | | | 454 | | |
| 120.91 | 120.97 | 27B | L+ | 296 | | | 296 | | | | | | | 296 | | |
| 120.97 | 120.97 | 21 | L+ | 23 | | | 46 | | | | | | | | 46 | LOWELL St |
| 120.97 | 121.01 | 32 | CL | 169 | 23 | | 676 | | | | | 23 | | | 676 | |
| 120.98 | 121.02 | 27B | L+ | 211 | | | 211 | | | | | | | 211 | | |
| 121.00 | 121.01 | 40 | L+ | 50 | | | | 50 | | | | | | 50 | | |
| 121.01 | 121.01 | 21 | R+ | 37 | | | 74 | | | | | | | | 74 | DRYDENS Rd |
| 121.02 | 121.09 | 32 | CL | 391 | 36 | | 1,564 | | | | | 36 | | | 1,564 | |
| 121.02 | 121.02 | 21 | L+ | 25 | | | 50 | | | | | | | | 50 | TOAD Ln |
| 121.03 | 121.20 | 27B | L+ | 866 | | | 866 | | | | | | | 866 | | |
| 121.04 | 121.05 | 40 | R+ | 100 | | | | 100 | | | | | | 100 | | |
| 121.05 | 121.06 | 40 | L+ | 50 | | | | 50 | | | | | | 50 | | |
| 121.09 | 121.14 | 32 | CL | 290 | 28 | | 582 | | | | | 28 | | | 74 | |
| 121.14 | 121.20 | 32 | CL | 275 | 26 | | 1,100 | | | | | 26 | | | 1,564 | |
| 121.20 | 121.20 | 21 | L+ | 48 | | | 96 | | | | | | | | 96 | HUFFORD Rd |
| 121.20 | 121.20 | 36 | L+ | 17 | | 34 | | | | | | | | 68 | | |
| 121.21 | 121.22 | 32 | CL | 90 | 13 | | 360 | | | | | 13 | | | 360 | |
| 121.21 | 121.26 | 27B | L+ | 264 | | | 264 | | | | | | | 264 | | |
| 121.22 | 121.25 | 40 | L+ | 150 | | | | 150 | | | | | | 150 | | |
| 121.23 | 121.23 | 21 | R+ | 27 | | | 54 | | | | | | | | 54 | SWAN Rd / DRIVEWAY |
| 121.23 | 121.23 | 36 | R+ | 17 | | 34 | | | | | | | | 68 | | |
| 121.23 | 121.26 | 32 | CL | 148 | 21 | | 592 | | | | | 21 | | | 592 | |
| 121.24 | 121.26 | 27B | R+ | 143 | | | 143 | | | | | | | 143 | | |
| | | | | SUBTOTAL | 1,787 | 226 | 76,458 | 350 | 0 | 0 | 0 | 1,359 | 110 | 32,430 | 44,786 | |

# PAVEMENT DELINEATION QUANTITIES

PDQ-2

REVISED BY | DATE REVISED
ROBERT KING | KELLY B. TIMMONS
CALCULATED-DESIGNED BY | CHECKED BY
FUNCTIONAL SUPERVISOR
KELLY B. TIMMONS

STATE OF CALIFORNIA - DEPARTMENT OF TRANSPORTATION
DESIGN

P:\PROJ\01\41500\drafting\sheets\0113000127nc002.dgn

LAST REVISION 00-00-00 | DATE PLOTTED => 17-AUG-2016 | TIME PLOTTED => 09:23

| Dist | COUNTY | ROUTE | POST MILES TOTAL PROJECT | SHEET No. | TOTAL SHEETS |
|---|---|---|---|---|---|
| 01 | Hum | 101 | 109.5/R125.8 | 21 | 100 |

Robert King 5-5-16
REGISTERED CIVIL ENGINEER DATE

May 23, 2016
PLANS APPROVAL DATE

REGISTERED PROFESSIONAL ENGINEER ROBERT W. KING No. C-58530 Exp. 12-31-16 CIVIL STATE OF CALIFORNIA

THE STATE OF CALIFORNIA OR ITS OFFICERS OR AGENTS SHALL NOT BE RESPONSIBLE FOR THE ACCURACY OR COMPLETENESS OF SCANNED COPIES OF THIS PLAN SHEET.

**NOTE:**

(N) NOT A SEPARATE PAY ITEM. FOR INFORMATION ONLY.

## PAVEMENT DELINEATION (CONTINUED)

| LOCATION PM | | DETAIL No. | Lt/Rt /CL | DETAIL LENGTH | REMOVE PAVEMENT MARKER (N) | THERMOPLASTIC TRAFFIC STRIPE | | | | | PAVEMENT MARKER (RETROFEFLECTIVE) | | | TEMPORARY TRAFFIC STRIPE (PAINT) | | REMARKS |
|---|---|---|---|---|---|---|---|---|---|---|---|---|---|---|---|---|
| | | | | | | 8" | 4" | 4" (BROKEN 6-1) | 4" (BROKEN 12-3) | 4" (BROKEN 36-12) | TYPE A | TYPE D | TYPE G | 4" WHITE | 4" YELLOW | |
| FROM | TO | | | LF | EA | LF | LF | LF | LF | LF | EA | EA | EA | LF | LF | |
| 121.24 | 121.27 | 40 | Rt | 150 | | | | 150 | | | | | | 150 | | |
| 121.26 | 121.30 | 32 | CL | 164 | 21 | | 656 | | | | | 21 | | | 656 | |
| 121.26 | 121.29 | 27B | Rt | 148 | | | 148 | | | | | | | 148 | | |
| 121.26 | 121.31 | 27B | Lt | 248 | | | 248 | | | | | | | 248 | | |
| 121.30 | 121.30 | 21 | Rt | 20 | | | 40 | | | | | | | | 40 | GRIFFIN Rd |
| 121.30 | 122.22 | 27B | Rt | 4842 | | | 4,842 | | | | | | | 4,842 | | |
| 121.30 | 121.64 | 32 | CL | 1753 | 188 | | 7,012 | | | | | 188 | | | 7,012 | |
| 121.32 | 121.35 | 38A | Lt | 153 | | 153 | | | | | | | | 306 | | |
| 121.32 | 121.67 | 27B | Lt | 1816 | | | 1,816 | | | | | | | 1,816 | | |
| 121.64 | 121.67 | 29 | CL | 169 | 18 | | 676 | | | | | 18 | | | 676 | |
| 121.68 | 121.71 | 29 | CL | 164 | 16 | | 656 | | | | | 16 | | | 656 | |
| 121.68 | 122.63 | 27B | Lt | 5016 | | | 5,016 | | | | | | | 5,016 | | |
| 121.71 | 122.23 | 22 | CL | 2740 | 232 | | 5,482 | | | | | 232 | | | 5,482 | |
| 122.18 | 122.22 | 38B | Rt | 238 | 22 | 238 | | | | | | | 22 | | | |
| 122.22 | 122.23 | 36 | Rt | 32 | 5 | 63 | | | | | | | 5 | | | |
| 122.23 | 122.23 | 21 | Rt | 32 | | | 64 | | | | | | | | 64 | BALD HILLS Rd |
| 122.24 | 122.64 | 22 | CL | 2133 | 180 | | 4,268 | | | | | 180 | | | 4,268 | |
| 122.24 | 122.86 | 27B | Rt | 3274 | | | 3,274 | | | | | | | 3,274 | | |
| 122.63 | 122.66 | 27C | Lt | 169 | | | | | 169 | | | | | 169 | | |
| 122.65 | 122.87 | 22 | CL | 1162 | 100 | | 2,324 | | | | | 100 | | | 2,324 | |
| 122.66 | 123.76 | 27B | Lt | 5819 | | | 5,819 | | | | | | | 5,819 | | |
| 122.87 | 122.87 | 21 | Rt | 28 | | | 56 | | | | | | | | 56 | PRAIRIE CREEK CAMP Rd |
| 122.88 | 124.37 | 27B | Rt | 7909 | | | 7,909 | | | | | | | 7,909 | | |
| 122.88 | 123.65 | 22 | CL | 4087 | 344 | | 8,174 | | | | | 344 | | | 8,174 | |
| 123.65 | 123.73 | 29 | CL | 438 | 40 | | 1,753 | | | | | 40 | | | 1,756 | |
| 123.73 | 123.77 | 22 | CL | 169 | 18 | | 338 | | | | | 18 | | | 338 | |
| 123.74 | 123.77 | 38 | Lt | 143 | 7 | 143 | | | | | | | 7 | | | |
| 123.77 | 123.77 | 21 | Lt | 31 | | | 62 | | | | | | | | 62 | DAVIDSON Rd |
| 123.77 | 123.77 | 36 | Lt | 25 | | 50 | | | | | | | | | | |
| 123.78 | 123.78 | 36 | Lt | 26 | | 53 | | | | | | | | | | |
| 123.78 | 123.84 | 29 | CL | 343 | 32 | | 1,376 | | | | | 32 | | | 1,376 | |
| 123.78 | 123.81 | 38 | Lt | 132 | 7 | 132 | | | | | | | 7 | | | |
| 123.78 | 124.58 | 27B | Lt | 4208 | | | 4,208 | | | | | | | 4,208 | | |
| 123.84 | 124.58 | 22 | CL | 3886 | 326 | | 7,774 | | | | | 326 | | | 7,774 | |
| 124.39 | 124.39 | 21 | Rt | 20 | | | 40 | | | | | | | | 40 | ROAD TO SIMPSON LOG SCALE |
| 124.39 | 124.40 | 27B | Rt | 21 | | | 21 | | | | | | | 21 | | |
| 124.42 | 124.74 | 27B | Rt | 1690 | | | 1690 | | | | | | | 1,690 | | |
| 124.58 | 124.58 | 21 | Lt | 26 | | | 52 | | | | | | | | 52 | PRIVATE Rd |
| 124.59 | 124.73 | 22 | CL | 750 | 66 | | 1,500 | | | | | 66 | | | 1,500 | |
| 124.59 | 125.73 | 27B | Lt | 6019 | | | 6,019 | | | | | | | | | |
| 124.73 | 124.73 | 21 | Rt | 21 | | | 42 | | | | | | | | 22 | FISH HATCHERY Rd |
| 124.74 | 125.73 | 22 | CL | 5248 | 440 | | 10,498 | | | | | 440 | | | 10,498 | |
| 124.74 | 124.77 | 27C | Rt | 158 | | | | | 158 | | | | | 158 | | |
| 124.77 | 125.73 | 27B | Rt | 5069 | | | 5,069 | | | | | | | 5,069 | | |
| THIS SHEET SUBTOTAL | | | | | 2062 | 832 | 98,922 | 150 | 327 | 0 | 0 | 2021 | 41 | 40,843 | 52,826 | |
| SUBTOTAL FROM SHEET PDQ-1 | | | | | 4741 | 875 | 182,210 | 0 | 1220 | 14,467 | 1212 | 3194 | 335 | 105,211 | 94,582 | |
| SUBTOTAL FROM SHEET PDQ-2 | | | | | 1787 | 226 | 76,458 | 350 | 0 | 0 | 0 | 1359 | 110 | 32,430 | 44,786 | |
| SUBTOTAL | | | | | 8590 | 1933 | 357,590 | 500 | 1547 | 14,467 | 1212 | 6574 | 486 | 178,484 | 192,194 | |
| TOTAL | | | | | 8590 | 1933 | 357,590 | 500 | 1547 | 14,467 | | 8272 | | 370,678 | | |

## PAVEMENT DELINEATION QUANTITIES

**PDQ-3**

REVISED BY | DATE REVISED
ROBERT KING | KELLY B. TIMMONS
CALCULATED-DESIGNED BY | CHECKED BY
FUNCTIONAL SUPERVISOR | KELLY B. TIMMONS
STATE OF CALIFORNIA - DEPARTMENT OF TRANSPORTATION
Caltrans® DESIGN

P:\PROJ\01\41500\drafting\sheets\0113000127nc003.dgn

LAST REVISION 00-00-00 | DATE PLOTTED => 17-AUG-2016 | TIME PLOTTED => 09:23

| Dist | COUNTY | ROUTE | POST MILES TOTAL PROJECT | SHEET No. | TOTAL SHEETS |
|---|---|---|---|---|---|
| 01 | Hum | 101 | 109.5/R125.8 | 22 | 100 |

Robert King 5-5-16
REGISTERED CIVIL ENGINEER DATE

May 23, 2016
PLANS APPROVAL DATE

REGISTERED PROFESSIONAL ENGINEER ROBERT W. KING No. C-58530 Exp. 12-31-16 CIVIL STATE OF CALIFORNIA

*THE STATE OF CALIFORNIA OR ITS OFFICERS OR AGENTS SHALL NOT BE RESPONSIBLE FOR THE ACCURACY OR COMPLETENESS OF SCANNED COPIES OF THIS PLAN SHEET.*

# PAVEMENT MARKING

| LOCATION PM | L+/R+/CL | REMOVE THERMOPLASTIC PAVEMENT MARKING | Temp PAVEMENT MARKING (PAINT) | THERMOPLASTIC PAVEMENT MARKING | COMMENTS |
|---|---|---|---|---|---|
| | | SQFT | SQFT | SQFT | |
| 109.57 | L+ | 33.0 | 33.0 | 33.0 | TYPE III (L) |
| 112.53 | R+ | 63.0 | 63.0 | 63.0 | KANE Rd 41' LIMIT LINE/"STOP" |
| 112.64 | L+ | 62.0 | 62.0 | 62.0 | ACCESS Rd 40' LIMIT LINE/"STOP" |
| 112.66 | R+ | 33.0 | 33.0 | 33.0 | TYPE V |
| 112.66 | L+ | 33.0 | 33.0 | 33.0 | TYPE V |
| R112.75 | L+ | 33.0 | 33.0 | 33.0 | TYPE V |
| R112.77 | L+ | 33.0 | 33.0 | 33.0 | TYPE V |
| R112.89 | L+ | 42.0 | 42.0 | 42.0 | TYPE VI |
| R113.01 | L+ | 42.0 | 42.0 | 42.0 | TYPE VI |
| R113.13 | L+ | 42.0 | 42.0 | 42.0 | TYPE VI |
| R113.74 | R+ | 42.0 | 42.0 | 42.0 | TYPE VI |
| R113.86 | R+ | 42.0 | 42.0 | 42.0 | TYPE VI |
| R113.98 | R+ | 42.0 | 42.0 | 42.0 | TYPE VI |
| T114.26 | R+ | 75.0 | 75.0 | 75.0 | TYPE III (L)/TYPE V |
| T114.27 | L+ | 54.0 | 54.0 | 54.0 | MCDONALD CREEK Rd 32' LIMIT LINE/"STOP" |
| T114.27 | R+ | 60.0 | 60.0 | 60.0 | MCDONALD CREEK Rd 38' LIMIT LINE/"STOP" |
| 114.46 | L+ | 75.0 | 75.0 | 75.0 | TYPE III (L)/TYPE V |
| 114.58 | R+ | 80.0 | 80.0 | 80.0 | REDWOOD TRAIN Ln 36' LIMIT LINE/"STOP" |
| 114.72 | R+ | 33.0 | 33.0 | 33.0 | TYPE V |
| 114.73 | R+ | 60.0 | 60.0 | 60.0 | REDWOOD TRAIL Cir 38' LIMIT LINE/"STOP" |
| 114.74 | L+ | 75.0 | 75.0 | 75.0 | TYPE III (L)/TYPE V |
| 116.44 | R+ | 33.0 | 33.0 | 33.0 | TYPE V |
| 116.44 | L+ | 33.0 | 33.0 | 33.0 | TYPE V |
| 116.52 | R+ | 66.0 | 66.0 | 66.0 | 2-TYPE V |
| 116.58 | L+ | 42.0 | 42.0 | 42.0 | TYPE VI |
| 116.67 | L+ | 42.0 | 42.0 | 42.0 | TYPE VI |
| 116.77 | L+ | 42.0 | 42.0 | 42.0 | TYPE VI |
| 116.84 | R+ | 42.0 | 42.0 | 42.0 | TYPE VI |
| 116.73 | R+ | 52.0 | 52.0 | 52.0 | OLD STATE Hwy 30' LIMIT LINE/"STOP" |
| 116.83 | R+ | 42.0 | 42.0 | 42.0 | TYPE VI |
| 116.92 | R+ | 42.0 | 42.0 | 42.0 | TYPE VI |
| 117.02 | L+ | 66.0 | 66.0 | 66.0 | 2-TYPE V |
| 117.08 | R+ | 33.0 | 33.0 | 33.0 | TYPE V |
| 117.08 | L+ | 33.0 | 33.0 | 33.0 | TYPE V |
| 117.37 | L+ | 47.0 | 47.0 | 47.0 | Rd TO BEACH 25' LIMIT LINE/"STOP" |
| 118.84 | L+ | 55.0 | 55.0 | 55.0 | DRIVEWAY 33' LIMIT LINE/"STOP" |
| 119.00 | L+ | 42.0 | 42.0 | 42.0 | TYPE III (L) |
| 119.01 | L+ | 83.0 | 83.0 | 83.0 | REDWOOD CREEK BEACH Co 39' LIMIT LINE/"STOP" |
| 119.19 | R+ | 42.0 | 42.0 | 42.0 | |
| 119.19 | L+ | 38.0 | 38.0 | 38.0 | |
| 119.95 | L+ | 88.0 | 88.0 | 88.0 | REFUSE DISPOSAL SITE Rd 44' LIMIT LINE/"STOP" |
| 119.99 | R+ | 52.0 | 52.0 | 52.0 | ERIS Ln/OLD STATE Hwy 30' LIMIT LINE/"STOP" |
| 120.11 | R+ | 51.0 | 51.0 | 51.0 | HILTONS Rd 29' LIMIT LINE/"STOP" |
| 120.14 | R+ | 19.5 | 19.5 | 19.5 | "45" MPH |
| 120.14 | L+ | 19.5 | 19.5 | 19.5 | "55" MPH |
| 120.73 | CL | 42.0 | 42.0 | 42.0 | TYPE III (L) |
| 120.74 | CL | 42.0 | 42.0 | 42.0 | TYPE III (L) |
| 120.74 | R+ | 16.5 | 16.5 | 16.5 | "35" MPH |
| 120.79 | CL | 42.0 | 42.0 | 42.0 | TYPE III (L) |
| 120.80 | CL | 42.0 | 42.0 | 42.0 | TYPE III (L) |
| 120.81 | L+ | 56.0 | 56.0 | 56.0 | LUNDBLADE St 34' LIMIT LINE/"STOP" |
| 120.82 | R+ | 16.5 | 16.5 | 16.5 | "35" MPH |
| 120.88 | R+ | 23.0 | 23.0 | 23.0 | "SLOW" |
| 120.89 | R+ | 35.0 | 35.0 | 35.0 | "SCHOOL" |
| 120.90 | R+ | 21.0 | 21.0 | 21.0 | "XING" |
| 120.92 | CL | 42.0 | 42.0 | 42.0 | TYPE III (L) |
| 120.92 | CL | 42.0 | 42.0 | 42.0 | TYPE III (L) |
| | SUBTOTAL | 2579 | 2579 | 2579 | |

## PAVEMENT DELINEATION QUANTITIES

PDQ-4

REVISED BY | DATE REVISED
ROBERT KING | KELLY B. TIMMONS
CALCULATED-DESIGNED BY | CHECKED BY
FUNCTIONAL SUPERVISOR
KELLY B. TIMMONS

STATE OF CALIFORNIA - DEPARTMENT OF TRANSPORTATION
Caltrans
DESIGN

P:\PROJ\01\41500\drafting\sheets\0113000127nc004.dgn

LAST REVISION 00-00-00 | DATE PLOTTED => 17-AUG-2016 | TIME PLOTTED => 09:23

| Dist | COUNTY | ROUTE | POST MILES TOTAL PROJECT | SHEET No. | TOTAL SHEETS |
|---|---|---|---|---|---|
| 01 | Hum | 101 | 109.5/R125.8 | 23 | 100 |

Robert King 5-5-16
REGISTERED CIVIL ENGINEER DATE

May 23, 2016
PLANS APPROVAL DATE

REGISTERED PROFESSIONAL ENGINEER ROBERT W. KING No. C-58530 Exp. 12-31-16 CIVIL STATE OF CALIFORNIA

*THE STATE OF CALIFORNIA OR ITS OFFICERS OR AGENTS SHALL NOT BE RESPONSIBLE FOR THE ACCURACY OR COMPLETENESS OF SCANNED COPIES OF THIS PLAN SHEET.*

# PAVEMENT MARKING (CONTINUED)

| LOCATION PM | Lt/Rt/CL | REMOVE THERMOPLASTIC PAVEMENT MARKING | Temp PAVEMENT MARKING (PAINT) | THERMOPLASTIC PAVEMENT MARKING | COMMENTS |
|---|---|---|---|---|---|
| | | SQFT | SQFT | SQFT | |
| 120.94 | Lt | 46.0 | 46.0 | 46.0 | DRIVEWAY 24' LIMIT LINE/"STOP" |
| 120.95 | Rt/Lt | 366.0 | 366.0 | 366.0 | X-WALK (PIANO KEYS) |
| 120.96 | Lt | 21.0 | 21.0 | 21.0 | "XING" |
| 120.97 | Lt | 35.0 | 35.0 | 35.0 | "SCHOOL" |
| 120.98 | Lt | 23.0 | 23.0 | 23.0 | "SLOW" |
| 120.99 | Rt | 23.0 | 23.0 | 23.0 | "SLOW" |
| 121.00 | Rt | 35.0 | 35.0 | 35.0 | "SCHOOL" |
| 121.00 | Lt | 46.0 | 46.0 | 46.0 | LOWELL St 24' LIMIT LINE/"STOP" |
| 121.01 | Rt | 21.0 | 21.0 | 21.0 | "XING" |
| 121.03 | Rt/Lt | 364.0 | 364.0 | 364.0 | X-WALK (CONTINENTAL) |
| 121.04 | Rt | 60.0 | 60.0 | 60.0 | DRYDENS Rd 38' LIMIT LINE/"STOP" |
| 121.05 | Lt | 49.0 | 49.0 | 49.0 | TOAD Rd 27' LIMIT LINE/"STOP" |
| 121.05 | CL | 42.0 | 42.0 | 42.0 | TYPE III (L) |
| 121.06 | CL | 42.0 | 42.0 | 42.0 | TYPE III (L) |
| 121.06 | Lt | 21.0 | 21.0 | 21.0 | "XING" |
| 121.06 | Lt | 35.0 | 35.0 | 35.0 | "SCHOOL" |
| 121.07 | Lt | 23.0 | 23.0 | 23.0 | "SLOW" |
| 121.18 | Rt | 18.0 | 18.0 | 18.0 | "PED" |
| 121.19 | CL | 42.0 | 42.0 | 42.0 | TYPE III (L) |
| 121.19 | Rt | 21.0 | 21.0 | 21.0 | "XING" |
| 121.20 | CL | 42.0 | 42.0 | 42.0 | TYPE III (L) |
| 121.23 | Lt | 81.0 | 81.0 | 81.0 | HUFFORD Rd 37' LIMIT LINE/"STOP" |
| 121.26 | Rt | 86.0 | 86.0 | 86.0 | DRIVEWAY 42' LIMIT LINE/"STOP" |
| 121.29 | Rt/Lt | 412.0 | 412.0 | 412.0 | X-WALK (CONTINENTAL) |
| 121.32 | CL | 42.0 | 42.0 | 42.0 | TYPE III (L) |
| 121.32 | Rt | 40.0 | 40.0 | 40.0 | GRIFFIN Rd 18' LIMIT LINE/"STOP" |
| 121.33 | CL | 42.0 | 42.0 | 42.0 | TYPE III (L) |
| 121.35 | Lt | 42.0 | 42.0 | 42.0 | TYPE III (R) |
| 121.36 | Lt | 21.0 | 21.0 | 21.0 | "XING" |
| 121.37 | Lt | 33.0 | 33.0 | 60.0 | TYPE III (R)/"PED" |
| 121.39 | Lt | 16.5 | 16.5 | 16.5 | "35" MPH |
| 121.44 | CL | 42.0 | 42.0 | 42.0 | TYPE III (L) |
| 121.45 | CL | 42.0 | 42.0 | 42.0 | TYPE III (L) |
| 121.52 | CL | 42.0 | 42.0 | 42.0 | TYPE III (L) |
| 121.53 | CL | 42.0 | 42.0 | 42.0 | TYPE III (L) |
| 121.63 | CL | 42.0 | 42.0 | 42.0 | TYPE III (L) |
| 121.64 | CL | 42.0 | 42.0 | 42.0 | TYPE III (L) |
| 121.80 | Rt | 19.5 | 19.5 | 19.5 | "55" MPH |
| 121.80 | Lt | 19.5 | 19.5 | 19.5 | "45" MPH |
| 122.19 | Rt | 42.0 | 42.0 | 42.0 | TYPE III (R) |
| 122.21 | Rt | 42.0 | 42.0 | 42.0 | TYPE III (R) |
| 122.23 | Rt | 42.0 | 42.0 | 42.0 | TYPE III (R) |
| 122.25 | Rt | 54.0 | 54.0 | 54.0 | BALD HILLS Rd 32' LIMIT LINE/"STOP" |
| 122.68 | Lt | 52.0 | 52.0 | 52.0 | ROBINSON Rd 30' LIMIT LINE/"STOP" |
| 122.90 | Rt | 46.0 | 46.0 | 46.0 | PRAIRIE CREEK CAMP Rd 24' LIMIT LINE/"STOP" |
| 123.80 | Rt | 33.0 | 33.0 | 33.0 | TYPE V |
| 123.81 | Rt | 75.0 | 75.0 | 75.0 | TYPE III (L)/TYPE V |
| 123.82 | Lt | 96.0 | 96.0 | 96.0 | DAVIDSON Rd 52' LIMIT LINE/"STOP" |
| 123.83 | Lt | 75.0 | 75.0 | 75.0 | TYPE III (R)/TYPE V |
| 123.85 | Lt | 33.0 | 33.0 | 33.0 | TYPE V |
| 124.42 | Rt | 52.0 | 52.0 | 52.0 | ROAD TO SIMPSON LOG SCALE 30' LIMIT LINE/"STOP" |
| 124.60 | Lt | 50.0 | 50.0 | 50.0 | PRIVATE Rd 28' LIMIT LINE/"STOP" |
| 124.75 | Rt | 52.0 | 52.0 | 52.0 | FISH hATCHERY Rd 30' LIMIT LINE/"STOP" |
| 125.69 | Rt | 33.0 | 33.0 | 33.0 | TYPE V |
| 125.69 | Lt | 33.0 | 33.0 | 33.0 | TYPE V |
| SUBTOTAL THIS SHEET | | 3291.5 | 3291.5 | 3291.5 | |
| SUBTOTAL FROM SHEET PDQ-4 | | 2579.0 | 2579.0 | 2579.0 | |
| TOTALS | | 5870.5 | 5870.5 | 5870.5 | |

## PAVEMENT DELINEATION QUANTITIES

PDQ-5

REVISED BY | DATE REVISED
ROBERT KING | KELLY B. TIMMONS
CALCULATED-DESIGNED BY | CHECKED BY
FUNCTIONAL SUPERVISOR
KELLY B. TIMMONS
STATE OF CALIFORNIA - DEPARTMENT OF TRANSPORTATION
Caltrans
DESIGN

P:\PROJ\01\41500\drafting\sheets\0113000127nc005.dgn

LAST REVISION 00-00-00 | DATE PLOTTED => 17-AUG-2016 | TIME PLOTTED => 09:23

| Dist | COUNTY | ROUTE | POST MILES TOTAL PROJECT | SHEET No. | TOTAL SHEETS |
|---|---|---|---|---|---|
| 01 | Hum | 101 | 109.5/R125.8 | 24 | 100 |

REGISTERED CIVIL ENGINEER — DATE 05-23-16

May 23, 2016
PLANS APPROVAL DATE

REGISTERED PROFESSIONAL ENGINEER — DAVID A. MORGAN No. 72321 Exp. 6/30/16 CIVIL — STATE OF CALIFORNIA

THE STATE OF CALIFORNIA OR ITS OFFICERS OR AGENTS SHALL NOT BE RESPONSIBLE FOR THE ACCURACY OR COMPLETENESS OF SCANNED COPIES OF THIS PLAN SHEET.

| LOCATION (PM) | L+/R+/CL | ORIENTATION | SIGN TYPE | SIGN MESSAGE | PANEL SIZE | NEW POST SIZE | INSTALL ROADSIDE SIGN PANEL ON EXIST POST | INSTALL ROADSIDE SIGN ONE POST | REMOVE ROADSIDE SIGN | FURNISH SINGLE SHEET ALUMINUM SIGN (0.063"-UNFRAMED) | (0.080"-UNFRAMED) | (0.080"-FRAMED) | RETROREFLECTIVE COATING (TYPE XI) | COMMENTS |
|---|---|---|---|---|---|---|---|---|---|---|---|---|---|---|
| | | | | | | EA | EA | EA | SQFT | SQFT | SQFT | SQFT | | |
| 109.57 | L+ | FSBT | R26A(CA) | "NO PARKING ANY TIME" | 24"x30" | 1 | | | 5.0 | | | | | |
| 109.63 | R+ | FNBT | SW(CA) | "SHARP CURVES NEXT 3 MILES REDUCE SPEED" | 114"x60" | 1 | | | | | 47.5 | 47.5 | | |
| 109.68 | R+ | FNBT | G69(CA) | "PASSING LANE 3 MILES" | 48"x36" | 1 | | | | 12.0 | | 12.0 | | |
| 109.71 | L+ | FSBT | W6-1 | DIVIDED HIGHWAY | 48"x48" | 1 | | | 16.0 | | | 16.0 | | |
| 109.76 | L+ | FSBT | W2-2L | SIDE ROAD SYMBOL | 36"x36" | 1 | | | 9.0 | | | 9.0 | | |
| 110.01 | R+ | FNBT | W11-1 | BICYCLE SYMBOL | 36"x36" | 2 | | | 9.0 | | | 9.0 | | |
| | | | W16-1 | "SHARE THE ROAD" | 18"x24" | | | | 3.0 | | | 3.0 | | |
| 110.18 | L+ | FNBT | W1-2L | CURVE (L+) | 48"x48" | 2 | | | 16.0 | | | 16.0 | | |
| | | | W13-1P | ADVISORY SPEED "45 MPH" | 30"x30" | | | | 6.3 | | | 6.3 | | |
| 110.18 | R+ | FNBT | W4-7L(CA) | COMBINATION CURVE / ADVISORY SPEED ( L+) "45" | 60"x60" | 1 | | | | | 25.0 | 25.0 | | REMOVE 2 EXISTING FLASHING BEACONS ON EXISTING SIGN PANEL AND INSTALL ON NEW SIGN PANEL. RADAR FEEDBACK SIGN TO REMAIN IN PLACE. |
| 110.27 | R+ | FNBT | W4-7L(CA) | COMBINATION CURVE / ADVISORY SPEED ( L+) "45" | 72"x72" | 1 | | | | | 36.0 | 36.0 | | |
| 110.34 | R+ | FNBT | W1-8L | CHEVRON SYMBOL (L+) | 36"x48" | 2 | | | 12.0 | | | 12.0 | | DOUBLE STACKED CHEVRONS |
| | | | W1-8L | CHEVRON SYMBOL (L+) | 36"x48" | | | | 12.0 | | | 12.0 | | |
| 110.35 | R+ | FNBT | W1-8L | CHEVRON SYMBOL (L+) | 36"x48" | 2 | | | 12.0 | | | 12.0 | | DOUBLE STACKED CHEVRONS |
| | | | W1-8L | CHEVRON SYMBOL (L+) | 36"x48" | | | | 12.0 | | | 12.0 | | |
| 110.36 | R+ | FNBT | W1-8L | CHEVRON SYMBOL (L+) | 36"x48" | 2 | | | 12.0 | | | 12.0 | | DOUBLE STACKED CHEVRONS |
| | | | W1-8L | CHEVRON SYMBOL (L+) | 36"x48" | | | | 12.0 | | | 12.0 | | |
| 110.37 | R+ | FNBT | W1-8L | CHEVRON SYMBOL (L+) | 36"x48" | 2 | | | 12.0 | | | 12.0 | | DOUBLE STACKED CHEVRONS |
| | | | W1-8L | CHEVRON SYMBOL (L+) | 36"x48" | | | | 12.0 | | | 12.0 | | |
| 110.38 | R+ | FNBT | W1-8L | CHEVRON SYMBOL (L+) | 36"x48" | 2 | | | 12.0 | | | 12.0 | | DOUBLE STACKED CHEVRONS |
| | | | W1-8L | CHEVRON SYMBOL (L+) | 36"x48" | | | | 12.0 | | | 12.0 | | |
| 110.45 | R+ | FSBT | W1-2R | CURVE (R+) | 48"x48" | 2 | | | 16.0 | | | 16.0 | | |
| | | | W13-1P | ADVISORY SPEED "45 MPH" | 30"x30" | | | | 6.3 | | | 6.3 | | |
| 110.46 | L+ | FSBT | W4-7R | COMBINATION CURVE / ADVISORY SPEED ( R+) "45" | 60"x60" | 1 | | | | | 25.0 | 25.0 | | |
| 110.48 | R+ | FNBT | W1-5R | WINDING ROAD (R+) | 48"x48" | 2 | | | 16.0 | | | 16.0 | | |
| | | | W7-3a | NEXT 2 MILES | 32"x18" | | | | 4.0 | | | 4.0 | | |
| 110.51 | R+ | FNBT | EM-1C | "LEAVING TSUNAMI HAZARD ZONE" | 24"x30" | 1 | | | 5.0 | | | 5.0 | | |
| 110.51 | L+ | FSBT | EM-1C | "ENTERING TSUNAMI HAZARD ZONE" | 24"x30" | 1 | | | 5.0 | | | 5.0 | | |
| 111.06 | R+ | FNBT | W8-5 | SLIPPERY | 36"x36" | 1 | | | 9.0 | | | 9.0 | | |
| 111.17 | R+ | FNBT | W4-1R(Fed) | COMBINATION REVERSE TURN / ADVISORY SPEED "30" | 48"x48" | 1 | | | 16.0 | | | 16.0 | | |
| 111.20 | L+ | FNBT | W4-1R(Fed) | COMBINATION REVERSE TURN / ADVISORY SPEED "30" | 60"x60" | 1 | | | | | 25.0 | 25.0 | | REMOVE 2 EXISTING FLASHING BEACONS ON EXISTING SIGN PANEL AND INSTALL ON NEW SIGN PANEL. RADAR FEEDBACK SIGN TO REMAIN IN PLACE. |
| 111.25 | L+ | FSBT | R51(CA) | "TURNOUT" | 28"x10" | 1 | | | 1.9 | | | | | |
| 111.26 | R+ | FNBT | W1-8L | CHEVRON SYMBOL (L+) | 36"x48" | 2 | | | 12.0 | | | 12.0 | | DOUBLE STACKED CHEVRONS |
| | | | W1-8L | CHEVRON SYMBOL (L+) | 36"x48" | | | | 12.0 | | | 12.0 | | |
| 111.26 | R+ | FSBT | W1-8R | CHEVRON SYMBOL (R+) | 36"x48" | 2 | | | 12.0 | | | 12.0 | | DOUBLE STACKED CHEVRONS |
| | | | W1-8R | CHEVRON SYMBOL (R+) | 36"x48" | | | | 12.0 | | | 12.0 | | |
| 111.27 | R+ | FNBT | W1-8L | CHEVRON SYMBOL (L+) | 36"x48" | 2 | | | 12.0 | | | 12.0 | | DOUBLE STACKED CHEVRONS |
| | | | W1-8L | CHEVRON SYMBOL (L+) | 36"x48" | | | | 12.0 | | | 12.0 | | |
| 111.27 | R+ | FSBT | W1-8R | CHEVRON SYMBOL (R+) | 36"x48" | 2 | | | 12.0 | | | 12.0 | | DOUBLE STACKED CHEVRONS |
| | | | W1-8R | CHEVRON SYMBOL (R+) | 36"x48" | | | | 12.0 | | | 12.0 | | |
| 111.28 | R+ | FNBT | W1-8L | CHEVRON SYMBOL (L+) | 36"x48" | 2 | | | 12.0 | | | 12.0 | | DOUBLE STACKED CHEVRONS |
| | | | W1-8L | CHEVRON SYMBOL (L+) | 36"x48" | | | | 12.0 | | | 12.0 | | |
| 111.28 | R+ | FSBT | W1-8R | CHEVRON SYMBOL (R+) | 36"x48" | 2 | | | 12.0 | | | 12.0 | | DOUBLE STACKED CHEVRONS |
| | | | W1-8R | CHEVRON SYMBOL (R+) | 36"x48" | | | | 12.0 | | | 12.0 | | |
| 111.29 | R+ | FNBT | W1-8L | CHEVRON SYMBOL (L+) | 36"x48" | 2 | | | 12.0 | | | 12.0 | | DOUBLE STACKED CHEVRONS |
| | | | W1-8L | CHEVRON SYMBOL (L+) | 36"x48" | | | | 12.0 | | | 12.0 | | |
| 111.29 | R+ | FSBT | W1-8R | CHEVRON SYMBOL (R+) | 36"x48" | 2 | | | 12.0 | | | 12.0 | | DOUBLE STACKED CHEVRONS |
| | | | W1-8R | CHEVRON SYMBOL (R+) | 36"x48" | | | | 12.0 | | | 12.0 | | |
| 111.30 | R+ | FNBT | W1-8L | CHEVRON SYMBOL (L+) | 36"x48" | 2 | | | 12.0 | | | 12.0 | | DOUBLE STACKED CHEVRONS |
| | | | W1-8L | CHEVRON SYMBOL (L+) | 36"x48" | | | | 12.0 | | | 12.0 | | |
| 111.30 | R+ | FSBT | W1-8R | CHEVRON SYMBOL (R+) | 36"x48" | 2 | | | 12.0 | | | 12.0 | | DOUBLE STACKED CHEVRONS |
| | | | W1-8R | CHEVRON SYMBOL (R+) | 36"x48" | | | | 12.0 | | | 12.0 | | |
| 111.33 | L+ | FSBT | W4-22R(CA) | COMBINATION ROLLOVER CURVE / ADVISORY SPEED "30" | 96"x96" | 1 | | | | | 64.0 | 64.0 | | |
| 111.43 | R+ | FSBT | W1-3L | REVERSE TURN (L+) | 48"x48" | 2 | | | 16.0 | | | 16.0 | | |
| | | | W13-1P | ADVISORY SPEED "30" | 30"x30" | | | | 6.3 | | | 6.3 | | |
| 111.44 | L+ | FSBT | W4-1L(CA) | COMBINATION REVERSE TURN / ADVISORY SPEED (L+)"30" | 60"x60" | 1 | | | | | 25.0 | 25.0 | | REMOVE 2 EXISTING FLASHING BEACONS ON EXISTING SIGN PANEL AND INSTALL ON NEW SIGN PANEL. RADAR FEEDBACK SIGN TO REMAIN IN PLACE. |
| | | | | SUBTOTAL SHEET SQ-1 | | 56 | 0 | 0 | 525.8 | 12.0 | 247.5 | 778.4 | | |

# SIGN QUANTITIES

SQ-1

REVISED BY | DATE REVISED
BRIAN THOMAS | ROBERT KING
CALCULATED-DESIGNED BY | CHECKED BY
FUNCTIONAL SUPERVISOR: DAVID MORGAN

STATE OF CALIFORNIA - DEPARTMENT OF TRANSPORTATION
Caltrans
SAFETY

P:\PROJ\01\41500\drafting\sheets\0113000127od001.dgn

LAST REVISION 00-00-00 | DATE PLOTTED => 17-AUG-2016 | TIME PLOTTED => 09:23

| Dist | COUNTY | ROUTE | POST MILES TOTAL PROJECT | SHEET No. | TOTAL SHEETS |
|---|---|---|---|---|---|
| 01 | Hum | 101 | 109.5/R125.8 | 25 | 100 |

REGISTERED CIVIL ENGINEER 05-23-16 DATE

May 23, 2016
PLANS APPROVAL DATE

REGISTERED PROFESSIONAL ENGINEER DAVID A. MORGAN No. 72321 Exp. 6/30/16 CIVIL STATE OF CALIFORNIA

THE STATE OF CALIFORNIA OR ITS OFFICERS OR AGENTS SHALL NOT BE RESPONSIBLE FOR THE ACCURACY OR COMPLETENESS OF SCANNED COPIES OF THIS PLAN SHEET.

| LOCATION (PM) | Lt/Rt/CL | ORIENTATION | SIGN TYPE | SIGN MESSAGE | PANEL SIZE | NEW POST SIZE | INSTALL ROADSIDE SIGN PANEL ON EXIST POST | ROADSIDE SIGN ONE POST | REMOVE ROADSIDE SIGN | FURNISH SINGLE SHEET ALUMINUM SIGN (0.063"-UNFRAMED) | (0.080"-UNFRAMED) | (0.080"-FRAMED) | RETROREFLECTIVE COATING (TYPE XI) | COMMENTS |
|---|---|---|---|---|---|---|---|---|---|---|---|---|---|---|
| | | | | | | | EA | EA | EA | SQFT | SQFT | SQFT | SQFT | |
| 111.65 | Lt | FSBT | EM-1C | "LEAVING TSUNAMI HAZARD ZONE" | 24"x30" | | 1 | | | 5.0 | | | 5.0 | |
| 111.66 | Rt | FNBT | EM-1C | "ENTERING TSUNAMI HAZARD ZONE" | 24"x30" | | 1 | | | 5.0 | | | 5.0 | |
| 111.66 | Lt | FSBT | SR(CA) | "TURNOUT 1/4 MILE" | 30"x18" | | 1 | | | 3.8 | | | | |
| 111.80 | Lt | FNBT | W1-8R | CHEVRON SYMBOL (Rt) | 36"x48" | | 1 | | | 12.0 | | | 12.0 | |
| 111.81 | Lt | FNBT | W1-8R | CHEVRON SYMBOL (Rt) | 36"x48" | | 1 | | | 12.0 | | | 12.0 | |
| 111.82 | Lt | FNBT | W1-8R | CHEVRON SYMBOL (Rt) | 36"x48" | | 1 | | | 12.0 | | | 12.0 | |
| 111.83 | Lt | FNBT | W1-8R | CHEVRON SYMBOL (Rt) | 36"x48" | | 1 | | | 12.0 | | | 12.0 | |
| 111.84 | Lt | FNBT | W1-8R | CHEVRON SYMBOL (Rt) | 36"x48" | | 1 | | | 12.0 | | | 12.0 | |
| 111.86 | Lt | FSBT | W1-6L | ONE-DIRECTION LARGE ARROW (Lt) | 48"x24" | | 2 | | | | 8.0 | | 8.0 | |
| | | | TYPE-N(CA) | MARKER | 18"x18" | | | | | 2.3 | | | 2.3 | |
| 111.92 | Lt | FSBT | W1-1L | TURN | 48"x48" | | 2 | | | 16.0 | | | 16.0 | |
| | | | W13-1P | "30 MPH" | 30"x30" | | | | | 6.3 | | | 6.3 | |
| 111.93 | Rt | FNBT | EM-1C | "LEAVING TSUNAMI HAZARD ZONE" | 24"x30" | | 1 | | | 5.0 | | | 5.0 | |
| 111.99 | Lt | FSBT | EM-1C | "ENTERING TSUNAMI HAZARD ZONE" | 24"x30" | | 1 | | | 5.0 | | | 5.0 | |
| 112.00 | Rt | FNBT | W1-2R | CURVE | 48"x48" | | 2 | | | 16.0 | | | 16.0 | |
| | | | W13-1P | ADVISORY SPEED "40" | 30"x30" | | | | | 6.3 | | | 6.3 | |
| 112.04 | Lt | FSBT | W1-6 | ONE-DIRECTION LARGE ARROW (Lt) | 48"x24" | | 2 | | | | 8.0 | | 8.0 | |
| | | | TYPE-N(CA) | MARKER | 18"x18" | | | | | 2.3 | | | 2.3 | |
| 112.10 | Rt | FNBT | W1-4R | REVERSE CURVE (Rt) | 36"x36" | | 2 | | | 9.0 | | | 9.0 | |
| | | | W13-1P | ADVISORY SPEED "40" | 30"x30" | | | | | 6.3 | | | 6.3 | |
| 112.11 | Lt | FSBT | W1-3L | REVERSE TURN (Lt) | 48"x48" | | 2 | | | 16.0 | | | 16.0 | |
| | | | W13-1P | ADVISORY SPEED "30 MPH" | 30"x30" | | | | | 6.3 | | | 6.3 | |
| 112.19 | Lt | FSBT | W4-1L(CA) | COMBINATION REVERSE TURN / ADVISORY SPEED (Lt)"30" | 60"x60" | | 1 | | | | | 25.0 | 25.0 | REMOVE 2 EXISTING FLASHING BEACONS ON EXISTING SIGN PANEL AND INSTALL ON NEW SIGN PANEL. RADAR FEEDBACK SIGN TO REMAIN IN PLACE. |
| 112.23 | Rt | FNBT | G47(CA) | "NORTH" | 21"x9" | | 2 | | | 1.3 | | | | |
| | | | G26-2(CA) | "US 101" | 28"x24" | | | | | 4.7 | | | | |
| 112.30 | Lt | FSBT | W1-4R | REVERSE CURVE (Rt) | 36"x36" | | 2 | | | 9.0 | | | 9.0 | |
| | | | W13-1P | ADVISORY SPEED "40" | 30"x30" | | | | | 6.3 | | | 6.3 | |
| 112.31 | Rt | FNBT | W1-2R | CURVE | 36"x36" | | 1 | | | 9.0 | | | 9.0 | |
| | | | W13-1P | ADVISORY SPEED "50" | 30"x30" | | 1 | | | 6.3 | | | 6.3 | |
| 112.39 | Lt | FSBT | W11-1 | BICYCLE SYMBOL | 48"x48" | | 2 | | | 16.0 | | | 16.0 | |
| | | | W16-1 | "SHARE THE ROAD" | 24"x30" | | | | | 5.0 | | | 5.0 | |
| 112.40 | Lt | FSBT | G68(CA) | "DIVIDED ROAD 2 MILES AHEAD" | 114"x60" | | 1 | | | | | 47.5 | 47.5 | |
| 112.44 | Rt | FNBT | W2-2R | SIDE ROAD SYMBOL (Rt) | 48"x48" | | 2 | | | 16.0 | | | 16.0 | |
| | | | W16-8P | "KANE Rd" | 48"x12" | | | | | | 4.0 | | 4.0 | |
| 112.51 | Lt | FSBT | W8-5 | SLIPPERY SYMBOL | 36"x36" | 4"x6" | | 1 | 1 | 9.0 | | | 9.0 | CHANGE ORIENTATION FROM NB TO SB & SIDE OF ALIGNMENT FROM Rt TO Lt |
| 112.53 | Rt | FWBT | R1-1 | "STOP" | 30"x30" | | 1 | | | 6.3 | | | 6.3 | |
| 112.53 | Rt | FWBT | G26-2(CA) | "US 101" | 28"x24" | | 2 | | | 4.7 | | | | |
| | | | M6-4 | ARROWS | 21"x15" | | | | | 2.2 | | | | |
| 112.53 | Rt | FWBT | W3-1 | STOP AHEAD SYMBOL | 36"x36" | | 1 | | | 9.0 | | | 9.0 | |
| 112.55 | Rt | FNBT | W2-2L | SIDE ROAD SYMBOL (Lt) | 36"x36" | | 1 | | | 9.0 | | | 9.0 | |
| 112.56 | Lt | FSBT | SW(CA) | "SHARP CURVES NEXT 3 MILES REDUCE SPEED" | 114"x60" | | 1 | | | | | 47.5 | 47.5 | |
| 112.62 | Lt | FSBT | W2-2R | SIDE ROAD SYMBOL | 48"x48" | | 2 | | | 16.0 | | | 16.0 | |
| | | | W16-8P | "KANE RD" | 48"x12" | | | | | | 4.0 | | 4.0 | |
| 112.63 | Lt | FEBT | W1-6 | ONE-DIRECTION LARGE ARROW (Lt) | 48"x24" | | 2 | | | | 8.0 | | 8.0 | W1-6 OVER TYPE-N(CA) ON CROSS ROAD FACING SB |
| | | | TYPE-N(CA) | MARKER | 18"x18" | | | | | 2.3 | | | 2.3 | |
| 112.63 | Lt | FEBT | R1-1 | "STOP" | 30"x30" | | 1 | | | 6.3 | | | 6.3 | |
| 112.63 | Rt | FWBT | W14-2 | "NO OUTLET" | 36"x36" | | 1 | | | 9.0 | | | 9.0 | W14-2 ON CROSS ROAD FACING NB |
| R112.70 | Lt | FSBT | SW4-1(CA) | "WATCH DOWNHILL SPEED" | 72"x72" | | 1 | | | | | 36.0 | 36.0 | |
| | | | | SUBTOTAL SHEET SQ-2 | | | 47 | 1 | 1 | 318.0 | 32.0 | 156.0 | 489.3 | |

# SIGN QUANTITIES
## SQ-2

REVISED BY | DATE REVISED
BRIAN THOMAS | ROBERT KING
CALCULATED-DESIGNED BY | CHECKED BY
FUNCTIONAL SUPERVISOR: DAVID MORGAN

STATE OF CALIFORNIA - DEPARTMENT OF TRANSPORTATION
Caltrans SAFETY

P:\PROJ\01\41500\drafting\sheets\0113000127od002.dgn

LAST REVISION 00-00-00 | DATE PLOTTED => 17-AUG-2016 | TIME PLOTTED => 09:24

| Dist | COUNTY | ROUTE | POST MILES TOTAL PROJECT | SHEET No. | TOTAL SHEETS |
|---|---|---|---|---|---|
| 01 | Hum | 101 | 109.5/R125.8 | 26 | 100 |

REGISTERED CIVIL ENGINEER 05-23-16 DATE

May 23, 2016
PLANS APPROVAL DATE

REGISTERED PROFESSIONAL ENGINEER DAVID A. MORGAN No. 72321 Exp. 6/30/16 CIVIL STATE OF CALIFORNIA

*THE STATE OF CALIFORNIA OR ITS OFFICERS OR AGENTS SHALL NOT BE RESPONSIBLE FOR THE ACCURACY OR COMPLETENESS OF SCANNED COPIES OF THIS PLAN SHEET.*

| LOCATION (PM) | L+/R+/CL | ORIENTATION | SIGN TYPE | SIGN MESSAGE | PANEL SIZE | NEW POST SIZE | INSTALL ROADSIDE SIGN PANEL ON Exist POST EA | ROADSIDE SIGN ONE POST EA | REMOVE ROADSIDE SIGN EA | FURNISH SINGLE SHEET ALUMINUM SIGN (0.063"-UNFRAMED) SQFT | (0.080"-UNFRAMED) SQFT | (0.080"-FRAMED) SQFT | RETROREFLECTIVE COATING (TYPE XI) SQFT | COMMENTS |
|---|---|---|---|---|---|---|---|---|---|---|---|---|---|---|
| R112.74 | R+ | FNBT | W6-1 | DIVIDED HIGHWAY | 48"x48" | | 1 | | | 16.0 | | | 16.0 | |
| R112.75 | L+ | FSBT | W6-3 | TWO-WAY TRAFFIC | 48"x48" | | 1 | | | 16.0 | | | 16.0 | |
| R112.79 | L+ | FSBT | W2-2R | SIDE ROAD SYMBOL | 36"x36" | | 1 | | | 9.0 | | | 9.0 | |
| R112.81 | R+ | FNBT | R2-1 | SPEED LIMIT 65" | 36"x48" | | 1 | | | 12.0 | | | | |
| R112.83 | L+ | FSBT | R2-1 | "SPEED LIMIT 55" | 36"x48" | | 1 | | | 12.0 | | | | |
| R112.89 | L+ | FSBT | R4-1 | "DO NOT PASS" | 24"x30" | | 1 | | | 5.0 | | | | |
| R112.89 | R+ | FSBT | R4-1 | "DO NOT PASS" | 24"x30" | | 1 | | | 5.0 | | | | |
| R112.93 | R+ | FSBT | W4-2R | LANE ENDS SYMBOL (R+) | 48"x48" | | | | 1 | | | | | |
| R112.93 | L+ | FSBT | W4-2R | LANE ENDS SYMBOL (R+) | 48"x48" | | | | 1 | | | | | |
| R113.07 | L+ | FSBT | R2-4(CA) | "55 ZONE AHEAD" | 36"x45" | | 1 | | | 11.3 | | | | |
| R113.12 | L+ | FSBT | W(75) CA | "LANE ENDS MERGE LEFT" | 60"x60" | | | | 1 | | | | | |
| R113.13 | L+ | FSBT | W4-2R | LANE ENDS SYMBOL (R+) | 48"x48" | 4"x6" | | 1 | | 16.0 | | | 16.0 | RELOCATE FROM PM 112.93 SB R+ TO PM 113.13 SB R+ |
| R113.13 | R+ | FSBT | W4-2R | LANE ENDS SYMBOL (R+) | 48"x48" | 4"x6" | | 1 | | 16.0 | | | 16.0 | RELOCATE FROM PM 112.93 SB L+ TO PM 113.13 SB L+ |
| R113.30 | R+ | FNBT | W7-1b | "TRUCKS USE LOWER GEAR" | 48"x48" | | 2 | | | 16.0 | | | 16.0 | |
| | | | W29C(CA) | HILL/GRADE | 48"x36" | | | | | | 12.0 | | 12.0 | |
| R113.30 | L+ | FSBT | W7-1b | "TRUCKS USE LOWER GEAR" | 48"x48" | | 2 | | | 16.0 | | | 16.0 | |
| | | | W29C(CA) | HILL/GRADE | 48"x36" | | | | | | 12.0 | | 12.0 | |
| R113.37 | L+ | FSBT | W9-1 | "RIGHT LANE ENDS" | 48"x48" | 4"x6" | | 1 | | 16.0 | | | 16.0 | RELOCATE FROM PM 113.12 SB R+ TO PM 113.37 SB R+ |
| R113.50 | R+ | FNBT | W9-1 | "RIGHT LANE ENDS" | 48"x48" | 4"x6" | | 1 | | 16.0 | | | 16.0 | RELOCATE FROM PM 113.80 NB R+ TO PM 113.50 NB R+ |
| R113.72 | R+ | FNBT | R2-4(CA) | "55 ZONE AHEAD" | 36"x45" | | 1 | | | 11.3 | | | | |
| R113.74 | R+ | FNBT | W4-2 | LANE ENDS SYMBOL | 48"x48" | 4"x6" | | 1 | | 16.0 | | | 16.0 | RELOCATE FROM PM 113.94 NB R+ TO PM 113.74 NB R+ |
| R113.74 | L+ | FNBT | W4-2 | LANE ENDS SYMBOL | 48"x48" | 4"x6" | | 1 | | 16.0 | | | 16.0 | RELOCATE FROM PM 113.94 NB L+ TO PM 113.74 NB L+ |
| R113.80 | R | FNBT | W9-1 | "LANE ENDS MERGE LEFT" | 60"x60" | | | | 1 | | | | | |
| R113.94 | R+ | FNBT | W4-2R | LANE ENDS SYMBOL (R+) | 48"x48" | | | | 1 | | | | | |
| R113.94 | L+ | FNBT | W4-2R | LANE ENDS SYMBOL (R+) | 48"x48" | | | | 1 | | | | | |
| T113.98 | R+ | FNBT | R4-1 | "DO NOT PASS" | 24"x30" | | 1 | | | 5.0 | | | | |
| T113.98 | L+ | FNBT | R4-1 | "DO NOT PASS" | 24"x30" | | 1 | | | 5.0 | | | | |
| T114.01 | R+ | FNBT | R2-1 | "SPEED LIMIT 55" | 36"x48" | | 1 | | | 12.0 | | | | |
| T114.03 | R+ | FNBT | EM-1C | "ENTERING TSUNAMI HAZARD ZONE" | 24"x30" | | 1 | | | 5.0 | | | 5.0 | |
| T114.04 | L+ | FSBT | EM-1C | "LEAVING TSUNAMI HAZARD ZONE" | 24"x30" | | 1 | | | 5.0 | | | 5.0 | |
| T114.07 | L+ | FSBT | R2-1 | "SPEED LIMIT 65" | 36"x48" | | 1 | | | 12.0 | | | | |
| T114.19 | R+ | FNBT | SW(CA) | ELK SYMBOL | 48"x48" | | 2 | | | 16.0 | | | 16.0 | REMOVE Exist FLASHING BEACON FROM Exist SIGN PANEL AND INSTALL ON NEW SIGN PANEL |
| | | | W16-4 | "NEXT 2 MILES" | 48"x36" | | | | | 12.0 | | | 12.0 | |
| T114.23 | L+ | FSBT | W6-1 | DIVIDED HIGHWAY | 48"x48" | | 1 | | | 16.0 | | | 16.0 | |
| T114.41 | R+ | FNBT | G69(CA) | "PASSING LANE NEXT 2 MILES" | 48"x36" | | 1 | | | 12.0 | | | 12.0 | |
| 114.46 | LT | FEBT | R1-1 | "STOP" | 30"x30" | | 1 | | | 6.3 | | | 6.3 | |
| 114.46 | R+ | FEBT | G26-2(CA) | "US 101" | 28"x24" | 4"x6" | | 1 | | 4.7 | | | | |
| | | | M6-4 | ARROWS | 21"x15" | | | | | 2.2 | | | | |
| 114.46 | R+ | FWBT | R1-1 | "STOP" | 30"x30" | | 1 | | | 6.3 | | | 6.3 | |
| 114.46 | L+ | FEBT | W3-1 | STOP AHEAD SYMBOL | 30"x30" | | 1 | | | 6.3 | | | 6.3 | |
| 114.51 | R+ | FNBT | RM-010 | CAMPING SYMBOL | 24"x24" | | 1 | | | 4.0 | | | 4.0 | |
| | | | D9-1 | TELEPHONE SYMBOL | 24"x24" | | 1 | | | 4.0 | | | 4.0 | |
| 114.52 | L+ | FSBT | W8-5 | SLIPPERY | 36"x36" | | 1 | | | 9.0 | | | 9.0 | |
| 114.52 | R+ | FNBT | W6-3 | TWO-WAY TRAFFIC | 48"x48" | | 1 | | | 16.0 | | | 16.0 | |
| 114.54 | R+ | FNBT | G11-4(CA) | MACDONALD CR BRIDGE 4-256 101 HUM 114.54 | 44"x18" | | 1 | | | 5.5 | | | | |
| 114.55 | L+ | FSBT | G11-4(CA) | MACDONALD CR BRIDGE 4-256 101 HUM 114.54 | 44"x18" | | 1 | | | 5.5 | | | | |
| 114.58 | R+ | FWBT | R1-1 | "STOP" | 30"x30" | | 1 | | | 6.3 | | | 6.3 | |
| 114.63 | R+ | FNBT | R8-4 | "EMERGENCY PARKING ONLY" | 48"x36" | | 1 | | | | 12.0 | | | |
| 114.74 | R+ | FNBT | G47(CA) | "NORTH" | 21"x9" | | 2 | | | 1.3 | | | | |
| | | | G26-2(CA) | "US 101" | 28"x24" | | | | | 4.7 | | | | |
| 114.78 | L+ | FSBT | G47(CA) | "SOUTH" | 21"x9" | | 2 | | | 1.3 | | | | |
| | | | G26-2(CA) | "US 101" | 28"x24" | | | | | 4.7 | | | | |
| 114.80 | R+ | FWBT | R1-1 | "STOP" | 30"x30" | | 1 | | | 6.3 | | | 6.3 | |
| 114.82 | R+ | FNBT | EM-1E | "TSUNAMI HAZARD ZONE" | 24"x24" | | 1 | | | 4.0 | | | 4.0 | |
| 114.83 | R+ | FNBT | R8-4 | "EMERGENCY PARKING ONLY" | 48"x36" | | 1 | | | | 12.0 | | | |
| 114.84 | L+ | FSBT | D9-1 | TELEPHONE SYMBOL | 24"x24" | | 1 | | | 4.0 | | | 4.0 | |
| 114.86 | L+ | FSBT | R8-4 | "EMERGENCY PARKING ONLY" | 48"x36" | | 1 | | | | 12.0 | | | |
| 114.88 | L+ | FSBT | EM-1E | "TSUNAMI HAZARD ZONE" | 24"x24" | | 1 | | | 4.0 | | | 4.0 | |
| 114.89 | R+ | FNBT | G69(CA) | "PASSING LANE NEXT 2 MILES" | 48"x36" | | 1 | | | | 12.0 | | 12.0 | |
| 114.90 | L+ | FSBT | W2-2L | SIDE ROAD SYMBOL | 36"x36" | | 1 | | | 9.0 | | | 9.0 | |
| | | | | SUBTOTAL SHEET SQ-3 | | | 46 | 7 | 6 | 441.0 | 72.0 | 0.0 | 356.5 | |

# SIGN QUANTITIES

SQ-3

REVISED BY | DATE REVISED
BRIAN THOMAS | ROBERT KING
CALCULATED-DESIGNED BY | CHECKED BY
FUNCTIONAL SUPERVISOR: DAVID MORGAN
STATE OF CALIFORNIA - DEPARTMENT OF TRANSPORTATION
Caltrans
SAFETY

P:\PROJ\01\41500\drafting\sheets\01130001270d003.dgn

LAST REVISION 00-00-00 | DATE PLOTTED => 17-AUG-2016 | TIME PLOTTED => 09:24

| Dist | COUNTY | ROUTE | POST MILES TOTAL PROJECT | SHEET No. | TOTAL SHEETS |
|---|---|---|---|---|---|
| 01 | Hum | 101 | 109.5/R125.8 | 27 | 100 |

REGISTERED CIVIL ENGINEER — DATE 05-23-16

May 23, 2016
PLANS APPROVAL DATE

REGISTERED PROFESSIONAL ENGINEER — DAVID A. MORGAN No. 72321 Exp. 6/30/16 CIVIL — STATE OF CALIFORNIA

THE STATE OF CALIFORNIA OR ITS OFFICERS OR AGENTS SHALL NOT BE RESPONSIBLE FOR THE ACCURACY OR COMPLETENESS OF SCANNED COPIES OF THIS PLAN SHEET.

| LOCATION (PM) | L+/R+/CL | ORIENTATION | SIGN TYPE | SIGN MESSAGE | PANEL SIZE | | NEW POST SIZE | INSTALL ROADSIDE SIGN PANEL ON Exist POST | REMOVE ROADSIDE SIGN ONE POST SIGN- | FURNISH SINGLE SHEET ALUMINUM SIGN (0.063"-UNFRAMED) | (0.080"-UNFRAMED) | (0.080"-FRAMED) | RETROREFLECTIVE COATING (TYPE XI) | COMMENTS |
|---|---|---|---|---|---|---|---|---|---|---|---|---|---|---|
| | | | | | | | EA | EA | EA | SQFT | SQFT | SQFT | SQFT | |
| 115.02 | L+ | FSBT | W11-20 | ELK SYMBOL | 48"x48" | | 2 | | | 16.0 | | | 16.0 | |
| | | | W16-4 | "NEXT 1/2 MILE" | 48"x36" | | | | | 12.0 | | | 12.0 | OVERSIZED FEDERAL SPECIFICATION |
| 115.83 | L+ | FSBT | EM-1C | "ENTERING TSUNAMI HAZARD ZONE" | 24"x30" | | 1 | | | 5.0 | | | 5.0 | |
| 115.84 | R+ | FNBT | EM-1C | "LEAVING TSUNAMI HAZARD ZONE" | 24"x30" | 4"x6" | | 1 | | 5.0 | | | 5.0 | |
| 116.27 | L+ | FSBT | W11-20 | ELK SYMBOL | 48"x48" | | 2 | | | 16.0 | | | 16.0 | REMOVE Exist FLASHING BEACON FROM Exist SIGN PANEL AND INSTALL ON NEW SIGN PANEL |
| | | | W16-4 | "NEXT 2 MILES" | 48"x36" | | | | | 12.0 | | | 12.0 | |
| 116.50 | L+ | FSBT | W6-3 | 2-WAY TRAFFIC | 48"x48" | | 1 | | | 16.0 | | | 16.0 | |
| 116.53 | R+ | FNBT | W9-1R | "RIGHT LANE ENDS" | 48"x48" | 4"x6" | | 1 | | 16.0 | | | 16.0 | RELOCATE FROM PM 116.71 NB R+ TO PM 116.53 NB R+ |
| 116.57 | L+ | FSBT | R4-1 | "DO NOT PASS" | 24"x30" | | 1 | | | 5.0 | | | | |
| 116.57 | R+ | FSBT | R4-1 | "DO NOT PASS" | 24"x30" | | 1 | | | 5.0 | | | | |
| 116.57 | R+ | FNBT | R4-3 | "SLOWER TRAFFIC KEEP RIGHT" | 48"x60" | | 1 | | | | 20.0 | | | |
| 116.63 | L+ | FSBT | W4-2R | LANE ENDS SYMBOL (R+) | 48"x48" | | | | 1 | | | | | |
| 116.63 | R+ | FSBT | W4-2R | LANE ENDS SYMBOL (R+) | 48"x48" | | | | 1 | | | | | |
| 116.71 | R+ | FNBT | W75 (CA) | "LANE ENDS MERGE LEFT" | 60"x60" | | | | 1 | | | | | |
| 116.73 | L+ | FSBT | W1-4L | REVERSE CURVE (L+) | 36"x36" | | 2 | | | 9.0 | | | 9.0 | |
| | | | W13-1P | ADVISORY SPEED "40 MPH" | 30"x30" | | | | | 6.3 | | | 6.3 | |
| 116.73 | R+ | FNBT | W4-2R | LANE ENDS SYMBOL (R+) | 48"x48" | 4"x6" | | 1 | | 16.0 | | | 16.0 | RELOCATE FROM PM 116.87 NB R+ TO PM 116.73 NB R+ |
| 116.73 | L+ | FNBT | W4-2R | LANE ENDS SYMBOL (R+) | 48"x48" | 4"x6" | | 1 | | 16.0 | | | 16.0 | RELOCATE FROM PM 116.87 NB L+ TO PM 116.73 NB L+ |
| 116.77 | R+ | FNBT | W2-2R | SIDE ROAD SYMBOL (R+) | 36"x36" | | 1 | | | 9.0 | | | 9.0 | |
| 116.77 | L+ | FSBT | W4-2R | LANE ENDS SYMBOL (R+) | 48"x48" | 4"x6" | | 1 | | 16.0 | | | 16.0 | RELOCATE FROM PM 116.63 SB R+ TO PM 116.77 SB R+ |
| 116.77 | R+ | FSBT | W4-2R | LANE ENDS SYMBOL (R+) | 48"x48" | 4"x6" | | 1 | | 16.0 | | | 16.0 | RELOCATE FROM PM 116.63 SB L+ TO PM 116.77 SB L+ |
| 116.78 | L+ | FSBT | W75 (CA) | "LANE ENDS MERGE LEFT" | 60"x60" | | | | 1 | | | | | |
| 116.86 | R+ | FWBT | R1-1 | "STOP" | 30"x30" | | 1 | | | 6.3 | | | 6.3 | |
| 116.86 | R+ | FWBT | G26-2(CA) | "US 101" | 28"x24" | | 2 | | | 4.7 | | | | |
| | | | M6-4 | ARROWS | 21"x15" | | | | | 2.2 | | | | |
| 116.87 | R+ | FNBT | W4-2R | LANE ENDS SYMBOL (R+) | 48"x48" | | | | 1 | | | | | |
| 116.87 | L+ | FNBT | W4-2R | LANE ENDS SYMBOL (R+) | 48"x48" | | | | 1 | | | | | |
| 116.93 | R+ | FNBT | R4-1 | "DO NOT PASS" | 24"x30" | | 1 | | | 5.0 | | | | |
| 116.93 | L+ | FNBT | R4-1 | "DO NOT PASS" | 24"x30" | | 1 | | | 5.0 | | | | |
| 116.97 | L+ | FSBT | W9-1R | "RIGHT LANE ENDS" | 48"x48" | 4"x6" | | 1 | | 16.0 | | | 16.0 | RELOCATE FROM PM 116.78 SB R+ TO PM 116.97 SB R+ |
| 116.98 | L+ | FSBT | R4-3 | "SLOWER TRAFFIC KEEP RIGHT" | 48"x60" | | 1 | | | | 20.0 | | | |
| 117.00 | R+ | FNBT | W6-3 | 2-WAY TRAFFIC | 48"x48" | | 1 | | | 16.0 | | | 16.0 | |
| 117.00 | L+ | FSBT | W2-2L | SIDE ROAD SYMBOL (L+) | 36"x36" | | 1 | | | 9.0 | | | 9.0 | |
| 117.37 | L+ | FEBT | R1-1 | "STOP" | 30"x30" | | 1 | | | 6.3 | | | 6.3 | |
| 117.67 | R+ | FNBT | G47(CA) | "NORTH" | 21"x 9" | | 2 | | | 1.3 | | | | |
| | | | G26-2(CA) | "US 101" | 28"x24" | | | | | 4.7 | | | | |
| 117.67 | L+ | FSBT | G48(CA) | "SOUTH" | 21"x 9" | | 2 | | | 1.3 | | | | |
| | | | G26-2(CA) | "US 101" | 28"x24" | | | | | 4.7 | | | | |
| 117.94 | R+ | FNBT | EM-1C | "ENTERING TSUNAMI HAZARD ZONE" | 24"x30" | | 1 | | | 5.0 | | | 5.0 | |
| 117.94 | L+ | FSBT | EM-1C | "LEAVING TSUNAMI HAZARD ZONE" | 24"x30" | | 1 | | | 5.0 | | | 5.0 | |
| 118.00 | R+ | FNBT | W11-2 | PED SYMBOL | 36"x36" | | 1 | | | 9.0 | | | 9.0 | |
| 118.00 | L+ | FSBT | W1-2L | CURVE (L+) | 48"x48" | | 1 | | | 16.0 | | | 16.0 | |
| 118.06 | R+ | FNBT | R2-1 | "SPEED LIMIT 55" | 36"x48" | | 1 | | | 12.0 | | | | |
| 118.50 | R+ | FNBT | EM-1E | "TSUNAMI HAZARD ZONE" | 24"x24" | | 1 | | | 4.0 | | | 4.0 | LOCATED WITHIN ESA |
| 118.79 | R+ | FNBT | W8-4 | "SOFT SHOULDER" | 36"x36" | | 1 | | | 9.0 | | | 9.0 | LOCATED WITHIN ESA |
| 118.83 | L+ | FSBT | EM-1E | "TSUNAMI HAZARD ZONE" | 24"x24" | | 1 | | | 4.0 | | | 4.0 | |
| 119.02 | L+ | FEBT | R1-1 | "STOP" | 30"x30" | | 1 | | | 6.3 | | | 6.3 | |
| 119.05 | L+ | FSBT | W11-2 | PED SYMBOL | 36"x36" | | 1 | | | 9.0 | | | 9.0 | |
| 119.11 | R+ | FNBT | EM-1E | "TSUNAMI HAZARD ZONE" | 24"x24" | | 1 | | | 4.0 | | | 4.0 | |
| 119.17 | L+ | FSBT | EM-1E | "TSUNAMI HAZARD ZONE" | 24"x24" | | 1 | | | 4.0 | | | 4.0 | |
| 119.20 | L+ | FEBT | R1-1 | "STOP" | 30"x30" | | 1 | | | 6.3 | | | 6.3 | |
| 119.59 | R+ | FNBT | EM-1E | "TSUNAMI HAZARD ZONE" | 24"x24" | | 1 | | | 4.0 | | | 4.0 | |
| 119.59 | L+ | FSBT | EM-1E | "TSUNAMI HAZARD ZONE" | 24"x24" | | 1 | | | 4.0 | | | 4.0 | |
| 119.82 | L+ | FSBT | R2-1 | "SPEED LIMIT 55" | 36"x48" | | 1 | | | 12.0 | | | | |
| 119.94 | L+ | FEBT | R1-1 | "STOP" | 30"x30" | | 1 | | | 6.3 | | | 6.3 | |
| 119.98 | L+ | FSBT | R48(CA) | "SPEED ENFORCED BY RADAR" | 42"x42" | | 1 | | | 12.3 | | | | |
| 120.00 | R+ | FWBT | R1-1 | "STOP" | 30"x30" | | 1 | | | 6.3 | | | 6.3 | |
| 120.04 | R+ | FNBT | R2-4(CA) | "45 ZONE AHEAD" | 36"x45" | | 1 | | | 11.3 | | | | |
| 120.11 | R+ | FWBT | G26-2(CA) | "US 101" | 28"x24" | | 2 | | | 4.7 | | | | |
| | | | M6-4 | ARROWS | 21"x15" | | | | | 2.2 | | | | |
| | | | | SUBTOTAL SHEET SQ-4 | | | 47 | 7 | 6 | 435.5 | 40.0 | 0.0 | 342.1 | |

# SIGN QUANTITIES SQ-4

| REVISED BY | DATE REVISED |
|---|---|
| BRIAN THOMAS | ROBERT KING |
| CALCULATED-DESIGNED BY | CHECKED BY |
| FUNCTIONAL SUPERVISOR | DAVID MORGAN |

STATE OF CALIFORNIA - DEPARTMENT OF TRANSPORTATION — SAFETY — Caltrans

P:\PROJ\01\41500\drafting\sheets\0113000127od004.dgn

LAST REVISION 00-00-00 — DATE PLOTTED => 17-AUG-2016 — TIME PLOTTED => 09:24

| Dist | COUNTY | ROUTE | POST MILES TOTAL PROJECT | SHEET No. | TOTAL SHEETS |
|---|---|---|---|---|---|
| 01 | Hum | 101 | 109.5/R125.8 | 28 | 100 |

REGISTERED CIVIL ENGINEER — 05-23-16 DATE

May 23, 2016
PLANS APPROVAL DATE

REGISTERED PROFESSIONAL ENGINEER — DAVID A. MORGAN No. 72321 Exp. 6/30/16 CIVIL — STATE OF CALIFORNIA

THE STATE OF CALIFORNIA OR ITS OFFICERS OR AGENTS SHALL NOT BE RESPONSIBLE FOR THE ACCURACY OR COMPLETENESS OF SCANNED COPIES OF THIS PLAN SHEET.

| LOCATION (PM) | Lt/Rt/CL | ORIENTATION | SIGN TYPE | SIGN MESSAGE | PANEL SIZE | NEW POST SIZE | INSTALL ROADSIDE SIGN PANEL ON EX16# POST | ROADSIDE SIGN ONE POST SIGN- | REMOVE ROADSIDE SIGN | FURNISH SINGLE SHEET ALUMINUM SIGN (0.063"-UNFRAMED) | (0.080"-UNFRAMED) | (0.080"-FRAMED) | RETROREFLECTIVE COATING (TYPE XI) | COMMENTS |
|---|---|---|---|---|---|---|---|---|---|---|---|---|---|---|
| | | | | | | | EA | EA | EA | SQFT | SQFT | SQFT | SQFT | |
| 120.11 | Rt | FWBT | R1-1 | "STOP" | 30"x30" | | 1 | | | 6.3 | | | 6.3 | |
| 120.11 | Rt | FNBT | EM-1A | "TSUNAMI EVACUATION ZONE" | 24"x24" | | 1 | | | 4.0 | | | 4.0 | |
| 120.14 | Rt | FNBT | R2-1 | "SPEED LIMIT 45" | 36"x48" | | 2 | | | 12.0 | | | | |
| | | | R48-1(CA) | "RADAR ENFORCED" | 36"x18" | | | | | 4.5 | | | | |
| 120.14 | Lt | FSBT | R3(CA) | "END 45 SPEED LIMIT" | 36"x45" | | 1 | | | 11.3 | | | | |
| 120.18 | Lt | FSBT | EM-1E | "TSUNAMI HAZARD ZONE" | 24"x24" | | 1 | | | 4.0 | | | 4.0 | |
| 120.19 | Rt | FNBT | R47(CA) | "$1000 FINE FOR LITTERING" | 52"x36" | | 1 | | | | 13.0 | | | |
| 120.20 | Rt | FNBT | W11-2 | Ped SYMBOL | 36"x36" | | 2 | | | 9.0 | | | 9.0 | |
| | | | W7-3a | "NEXT 1½ MILES" | 36"x18" | | | | | 4.5 | | | 4.5 | |
| 120.27 | Rt | FNBT | EM-1A | "TSUNAMI EVACUATION ZONE" | 24"x24" | | 1 | | | 4.0 | | | 4.0 | |
| 120.43 | Lt | FSBT | G48(CA) | "SOUTH" | 21"x 9" | | 2 | | | 1.3 | | | | |
| | | | G26-2(CA) | "US 101" | 28"x24" | | | | | 4.7 | | | | |
| 120.44 | Rt | FNBT | G09-2(CA) | "ORICK / POP 357 / ELEV 26" | 48"x24" | | 2 | | | | 8.0 | | 8.0 | |
| | | | G81-62(CA) | "EMERGENCY CALL 9-1-1" | 48"x24" | | | | | | 8.0 | | 8.0 | |
| 120.62 | Rt | FNBT | R3-9B | "CENTER LANE ONLY" | 24"x36" | | 1 | | | 6.0 | | | | |
| 120.67 | Lt | FSBT | R2-1 | "SPEED LIMIT 45" | 36"x48" | | 2 | | | 12.0 | | | 12.0 | |
| | | | R48-1(CA) | "RADAR ENFORCED" | 36"x18" | | | | | 4.5 | | | 4.5 | |
| 120.72 | Rt | FNBT | R2-1 | "SPEED LIMIT 35" | 36"x48" | | 2 | | | 12.0 | | | | |
| | | | R48-1(CA) | "RADAR ENFORCED" | 36"x18" | | | | | 4.5 | | | | |
| 120.77 | Rt | FNBT | S4-5 | REDUCED SPEED (SCHOOL) ZONE AHEAD "25" | 36"x36" | | 1 | | | 9.0 | | | 9.0 | SHEETING SHALL BE FLUORESCENT YELLOW-GREEN |
| 120.78 | Lt | FSBT | S5-3 | "END SCHOOL SPEED LIMIT" | 24"x30" | | 1 | | | 5.0 | | | 5.0 | |
| 120.79 | Lt | FEBT | R1-1 | "STOP" | 30"x30" | | 1 | | | 6.3 | | | 6.3 | |
| 120.79 | Rt | FNBT | S1-1 | SCHOOL SYMBOL | 36"x36" | 4"x6" | | 1 | | 9.0 | | | 9.0 | SHEETING SHALL BE FLOURESCENT YELLOW-GREEN |
| | | | W16-9P | "AHEAD" | 30"x18" | | | | | 3.8 | | | 3.8 | SHEETING SHALL BE FLOURESCENT YELLOW-GREEN |
| 120.80 | Rt | FNBT | S1-1 | SCHOOL SYMBOL | 36"x36" | | | | 1 | | | | | |
| | | | W16-9P | "AHEAD" | 30"x18" | | | | | | | | | |
| 120.82 | Rt | FNBT | W1-6L | ONE-DIRECTION LARGE ARROW (Lt) | 48"x24" | 4"x6" | | 1 | | | 8.0 | | 8.0 | INSTALL NEW W1-6L OVER TYPE-N(CA) IN HEAD-ON POSITION |
| | | | TYPE-N(CA) | MARKER | 18"x18" | | | | | | 2.3 | | 2.3 | |
| 120.86 | Rt | FNBT | SR4-1(CA) | "SCHOOL SPEED LIMIT 25 WHEN CHILDREN ARE PRESENT" | 36"x72" | | 1 | | | 18.0 | | | 18.0 | SHEETING SHALL BE FLUORESCENT YELLOW-GREEN; ASSEMBLY C |
| 120.89 | Rt | FNBT | S1-1 | SCHOOL SYMBOL | 36"x36" | | 2 | | | 9.0 | | | 9.0 | SHEETING SHALL BE FLUORESCENT YELLOW-GREEN |
| | | | W16-7P | DIAGONAL ARROW | 30"x18" | | | | | 3.8 | | | 3.8 | SHEETING SHALL BE FLUORESCENT YELLOW-GREEN |
| 120.89 | Lt | FNBT | S1-1 | SCHOOL SYMBOL | 36"x36" | | 2 | | | 9.0 | | | 9.0 | SHEETING SHALL BE FLUORESCENT YELLOW-GREEN |
| | | | W16-7P | DIAGONAL ARROW | 30"x18" | | | | | 3.8 | | | 3.8 | SHEETING SHALL BE FLUORESCENT YELLOW-GREEN |
| 120.89 | Lt | FSBT | S1-1 | SCHOOL SYMBOL | 36"x36" | | 2 | | | 9.0 | | | 9.0 | SHEETING SHALL BE FLUORESCENT YELLOW-GREEN |
| | | | W16-7P | DIAGONAL ARROW | 30"x18" | | | | | 3.8 | | | 3.8 | SHEETING SHALL BE FLUORESCENT YELLOW-GREEN |
| 120.89 | Rt | FSBT | S1-1 | SCHOOL SYMBOL | 36"x36" | | 2 | | | 9.0 | | | 9.0 | SHEETING SHALL BE FLUORESCENT YELLOW-GREEN |
| | | | W16-7P | DIAGONAL ARROW | 30"x18" | | | | | 3.8 | | | 3.8 | SHEETING SHALL BE FLUORESCENT YELLOW-GREEN |
| 120.93 | Lt | FEBT | R1-1 | "STOP" | 30"x30" | | 1 | | | 6.3 | | | 6.3 | |
| 121.00 | Lt | FEBT | R1-1 | "STOP" | 30"x30" | | 1 | | | 6.3 | | | 6.3 | |
| 121.02 | Rt | FNBT | S1-1 | SCHOOL SYMBOL | 36"x36" | | 2 | | | 9.0 | | | 9.0 | SHEETING SHALL BE FLUORESCENT YELLOW-GREEN |
| | | | W16-7P | DIAGONAL ARROW | 30"x18" | | | | | 3.8 | | | 3.8 | SHEETING SHALL BE FLUORESCENT YELLOW-GREEN |
| 121.02 | Lt | FNBT | S1-1 | SCHOOL SYMBOL | 36"x36" | | 2 | | | 9.0 | | | 9.0 | SHEETING SHALL BE FLUORESCENT YELLOW-GREEN |
| | | | W16-7P | DIAGONAL ARROW | 30"x18" | | | | | 3.8 | | | 3.8 | SHEETING SHALL BE FLUORESCENT YELLOW-GREEN |
| 121.02 | Lt | FSBT | S1-1 | SCHOOL SYMBOL | 36"x36" | | 2 | | | 9.0 | | | 9.0 | SHEETING SHALL BE FLUORESCENT YELLOW-GREEN |
| | | | W16-7P | DIAGONAL ARROW | 30"x18" | | | | | 3.8 | | | 3.8 | SHEETING SHALL BE FLUORESCENT YELLOW-GREEN |
| 121.02 | Rt | FSBT | S1-1 | SCHOOL SYMBOL | 36"x36" | | 2 | | | 9.0 | | | 9.0 | SHEETING SHALL BE FLUORESCENT YELLOW-GREEN |
| | | | W16-7P | DIAGONAL ARROW | 30"x18" | | | | | 3.8 | | | 3.8 | SHEETING SHALL BE FLUORESCENT YELLOW-GREEN |
| 121.03 | Lt | FEBT | R1-1 | "STOP" | 30"x30" | | 1 | | | 6.3 | | | 6.3 | |
| 121.03 | Rt | FWBT | R1-1 | "STOP" | 30"x30" | | 1 | | | 6.3 | | | 6.3 | |
| 121.06 | Rt | FNBT | R8-4 | "EMERGENCY PARKING ONLY" | 48"x36" | | 1 | | | | 12.0 | | 12.0 | |
| 121.07 | Lt | FSBT | SR4-1(CA) | "SCHOOL SPEED LIMIT 25 WHEN CHILDREN ARE PRESENT" | 36"x72" | | 1 | | | 18.0 | | | 18.0 | SHEETING SHALL BE FLUORESCENT YELLOW-GREEN; ASSEMBLY C |
| 121.08 | Rt | FNBT | S5-3 | "END SCHOOL SPEED LIMIT" | 24"x30" | | 1 | | | 5.0 | | | 5.0 | |
| 121.09 | Rt | FNBT | G11-5(CA) | REDWOOD Cr BRIDGE 4-28 101 Hum 121.09 | 44"x24" | | 1 | | | 7.3 | | | | |
| 121.16 | Lt | FSBT | G11-5(CA) | REDWOOD Cr BRIDGE 4-28 101 Hum 121.09 | 44"x24" | | 1 | | | 7.3 | | | | |
| 121.17 | Rt | FNBT | W11-2 | PED SYMBOL | 36"x36" | | 2 | | | 9.0 | | | 9.0 | SHEETING SHALL BE FLUORESCENT YELLOW-GREEN |
| | | | W16-9P | "AHEAD" | 30"x18" | | | | | 3.8 | | | 3.8 | SHEETING SHALL BE FLUORESCENT YELLOW-GREEN |
| 121.18 | Lt | FSBT | S1-1 | SCHOOL SYMBOL | 36"x36" | | 2 | | | 9.0 | | | 9.0 | SHEETING SHALL BE FLUORESCENT YELLOW-GREEN |
| | | | W16-9P | "AHEAD" | 30"x18" | | | | | 3.8 | | | 3.8 | SHEETING SHALL BE FLUORESCENT YELLOW-GREEN |
| 121.19 | Lt | FSBT | EM-1A | "TSUNAMI EVACUATION ZONE" | 24"x24" | | 1 | | | 4.0 | | | 4.0 | |
| | | | | SUBTOTAL SHEET SQ-5 | | | 53 | 2 | 1 | 350.5 | 51.3 | 0.0 | 317.9 | |

# SIGN QUANTITIES

SQ-5

REVISED BY | DATE REVISED
BRIAN THOMAS | ROBERT KING
CALCULATED-DESIGNED BY | CHECKED BY
FUNCTIONAL SUPERVISOR: DAVID MORGAN

STATE OF CALIFORNIA - DEPARTMENT OF TRANSPORTATION
Caltrans®
SAFETY

P:\PROJ\01\41500\drafting\sheets\0113000127od005.dgn

LAST REVISION 00-00-00 | DATE PLOTTED => 17-AUG-2016 | TIME PLOTTED => 09:24

| Dist | COUNTY | ROUTE | POST MILES TOTAL PROJECT | SHEET No. | TOTAL SHEETS |
|---|---|---|---|---|---|
| 01 | Hum | 101 | 109.5/R125.8 | 29 | 100 |

REGISTERED CIVIL ENGINEER 05-23-16 DATE

May 23, 2016
PLANS APPROVAL DATE

REGISTERED PROFESSIONAL ENGINEER DAVID A. MORGAN No. 72321 Exp. 6/30/16 CIVIL STATE OF CALIFORNIA

*THE STATE OF CALIFORNIA OR ITS OFFICERS OR AGENTS SHALL NOT BE RESPONSIBLE FOR THE ACCURACY OR COMPLETENESS OF SCANNED COPIES OF THIS PLAN SHEET.*

| LOCATION (PM) | L+/R+/CL | ORIENTATION | SIGN TYPE | SIGN MESSAGE | PANEL SIZE | NEW POST SIZE | INSTALL ROADSIDE SIGN PANEL ON EXIST POST | ROADSIDE SIGN ONE POST SIGN- | REMOVE ROADSIDE SIGN | FURNISH SINGLE SHEET ALUMINUM SIGN (0.063"-UNFRAMED) | (0.080"-UNFRAMED) | (0.080"-FRAMED) | RETROREFLECTIVE COATING (TYPE XI) | COMMENTS |
|---|---|---|---|---|---|---|---|---|---|---|---|---|---|---|
| | | | | | | | EA | EA | EA | SQFT | SQFT | SQFT | SQFT | |
| 121.20 | R+ | FNBT | W11-8 | EMERGENCY VEHICLE SYMBOL | 36"x36" | | 1 | | | 9.0 | | | 9.0 | |
| 121.21 | L+ | FEBT | R1-1 | "STOP" | 30"x30" | | 1 | | | 6.3 | | | 6.3 | |
| 121.21 | R+ | FWBT | R1-1 | "STOP" | 30"x30" | | 1 | | | 6.3 | | | 6.3 | |
| 121.24 | R+ | FNBT | W11-2 | Ped SYMBOL | 36"x36" | | 2 | | | 9.0 | | | 9.0 | SHEETING SHALL BE FLUORESCENT YELLOW-GREEN |
| | | | W16-7P | DIAGONAL ARROW | 30"x18" | | | | | 3.8 | | | 3.8 | |
| 121.24 | L+ | FNBT | W11-2 | Ped SYMBOL | 36"x36" | | 2 | | | 9.0 | | | 9.0 | SHEETING SHALL BE FLUORESCENT YELLOW-GREEN |
| | | | W16-7P | DIAGONAL ARROW | 30"x18" | | | | | 3.8 | | | 3.8 | |
| 121.28 | R+ | FNBT | R1-1 | "STOP" | 30"x30" | | 1 | | | 6.3 | | | 6.3 | |
| 121.28 | L+& R+ | FSBT | W11-2 | PED SYMBOL | 36"x36" | | 4 | | | 18.0 | | | 18.0 | SHEETING SHALL BE FLUORESCENT YELLOW-GREEN |
| | | | W16-7P | DIAGONAL ARROW | 30"x18" | | | | | 7.6 | | | 7.6 | |
| 121.36 | L+ | FSBT | W11-2 | Ped SYMBOL | 36"x36" | | 2 | | | 9.0 | | | 9.0 | SHEETING SHALL BE FLUORESCENT YELLOW-GREEN |
| | | | W16-9P | "AHEAD" | 30"x18" | | | | | 3.8 | | | 3.8 | |
| 121.38 | L+ | FSBT | R2-1 | "SPEED LIMIT 45" | 36"x48" | | 2 | | | 12.0 | | | | |
| | | | R48-1(CA) | "RADAR ENFORCED" | 36"x18" | | | | | 4.5 | | | | |
| 121.43 | R+ | FNBT | R2-1 | "SPEED LIMIT 45" | 36"x48" | | 1 | | | 12.0 | | | | |
| 121.47 | L+ | FSBT | W11-8 | EMERGENCY VEHICLE SYMBOL | 36"x36" | | 1 | | | 9.0 | | | 9.0 | |
| 121.65 | L+ | FSBT | R3-9b | "CENTER LANE ONLY" | 24"x36" | | 1 | | | 6.0 | | | | |
| 121.70 | R+ | FNBT | EM-1A | "TSUNAMI EVACUATION ZONE" | 24"x24" | | 1 | | | 4.0 | | | 4.0 | |
| 121.77 | R+ | FNBT | R48(CA) | "SPEED ENFORCED BY RADAR" | 42"x42" | | 1 | | | 12.3 | | | | |
| 121.79 | L+ | FSBT | EM-1A | "TSUNAMI EVACUATION ZONE" | 24"x24" | | 1 | | | 4.0 | | | 4.0 | |
| 121.82 | L+ | FSBT | R2-1 | "SPEED LIMIT 45" | 36"x48" | | 2 | | | 12.0 | | | | |
| | | | R48-1(CA) | "RADAR ENFORCED" | 36"x18" | | | | | 4.5 | | | | |
| 121.83 | L+ | FSBT | W11-2 | Ped SYMBOL | 36"x36" | | 2 | | | 9.0 | | | 9.0 | |
| | | | W7-3A | "NEXT 1½ MILES" | 36"x18" | | | | | 4.5 | | | 4.5 | |
| 121.83 | R+ | FNBT | R2-1 | "SPEED LIMIT 55" | 36"x48" | | 1 | | | 12.0 | | | | |
| 121.84 | L+ | FSBT | G09-2(CA) | "ORICK / POP 357 / ELEV 26" | 48"x24" | | 2 | | | | 8.0 | | 8.0 | |
| | | | G81-62(CA) | "EMERGENCY CALL 9-1-1" | 48"x24" | | | | | | 8.0 | | 8.0 | |
| 121.97 | R+ | FNBT | W11-1 | BICYCLE SYMBOL | 48"x48" | | 2 | | | 16.0 | | | 16.0 | |
| | | | W16-1 | "SHARE THE ROAD" | 24"x30" | | | | | 5.0 | | | 5.0 | |
| 122.01 | R+ | FNBT | W51(CA) | "SLOW TRUCKS" (TEXT) | 48"x48" | | 2 | | | 16.0 | | | 16.0 | |
| | | | W2-2R | SIDE ROAD SYMBOL (R+) | 48"x48" | | | | | 16.0 | | | 16.0 | |
| 122.07 | R+ | FNBT | R61(CA) | "INTERSECTION LANE CONTROL" | 36"x30" | | 1 | | | 7.5 | | | | |
| 122.23 | R+ | FWBT | R1-1 | "STOP" | 30"x30" | | 1 | | | 6.3 | | | 6.3 | |
| 122.23 | R+ | FWBT | G26-2(CA) | "US 101" | 28"x24" | | 2 | | | 4.7 | | | | |
| | | | M6-4 | ARROWS | 21"x15" | | | | | 2.2 | | | | |
| 122.23 | R+ | FNBT | W1-8L | CHEVRON SYMBOL (L+) | 36"x48" | | 1 | | | 12.0 | | | 12.0 | PLACE W1-8 CHEVRONS Approx 35' APART, AS DIRECTED BY ENGINEER |
| 122.24 | R+ | FNBT | W1-8L | CHEVRON SYMBOL (L+) | 36"x48" | 4"x6" | | 1 | 1 | 12.0 | | | 12.0 | PLACE W1-8 CHEVRONS Approx 35' APART, AS DIRECTED BY ENGINEER |
| 122.25 | R+ | FNBT | W1-8L | CHEVRON SYMBOL (L+) | 36"x48" | 4"x6" | | 1 | 1 | 12.0 | | | 12.0 | PLACE W1-8 CHEVRONS Approx 35' APART, AS DIRECTED BY ENGINEER |
| 122.26 | R+ | FNBT | W1-8L | CHEVRON SYMBOL (L+) | 36"x48" | 4"x6" | | 1 | 1 | 12.0 | | | 12.0 | PLACE W1-8 CHEVRONS Approx 35' APART, AS DIRECTED BY ENGINEER |
| 122.47 | L+ | FSBT | W51(CA) | "SLOW TRUCKS" | 48"x48" | | 2 | | | 16.0 | | | 16.0 | |
| | | | W2-2L | SIDE ROAD SYMBOL | 48"x48" | | | | | 16.0 | | | 16.0 | |
| 122.66 | L+ | FEBT | R1-1 | "STOP" | 30"x30" | | 1 | | | 6.3 | | | 6.3 | |
| 122.73 | L+ | FSBT | W1-4L | REVERSE CURVE (L+) | 36"x36" | | 2 | | | 9.0 | | | 9.0 | |
| | | | W13-1P | ADVISORY SPEED "45 MPH" | 30"x30" | | | | | 6.3 | | | 6.3 | |
| 122.89 | R+ | FNBT | R1-1 | "STOP" | 30"x30" | | 1 | | | 6.3 | | | 6.3 | |
| 122.92 | L+ | FSBT | EM-1C | "ENTERING TSUNAMI HAZARD ZONE" | 24"x30" | | 1 | | | 5.0 | | | 5.0 | |
| 122.96 | R+ | FNBT | EM-1A | "LEAVING TSUNAMI HAZARD ZONE" | 24"x30" | | 1 | | | 5.0 | | | 5.0 | |
| 123.37 | R+ | FNBT | W11-20 | ELK CROSSING SYMBOL | 36"x36" | | 2 | | | 9.0 | | | 9.0 | |
| | | | SP(CA) | "CROSSING" | 30"x12" | | | | | 2.5 | | | 2.5 | |
| 123.53 | R+ | FNBT | W2-2L | SIDE ROAD SYMBOL | 36"x36" | | 1 | | | 9.0 | | | 9.0 | |
| 123.65 | L+ | FSBT | R25(CA) | "PARK OFF PAVEMENT" | 24"x15" | | | | 1 | | | | | REMOVE "PARK OFF PAVEMENT" AND DO NOT REPLACE |
| | | | | SUBTOTAL SHEET SQ-6 | | | 49 | 3 | 4 | 409.8 | 16.0 | 0.0 | 336.1 | |

# SIGN QUANTITIES

## SQ-6

REVISED BY | DATE REVISED
BRIAN THOMAS | ROBERT KING
CALCULATED-DESIGNED BY | CHECKED BY
FUNCTIONAL SUPERVISOR
DAVID MORGAN

STATE OF CALIFORNIA - DEPARTMENT OF TRANSPORTATION
Caltrans®
SAFETY

P:\PROJ\01\41500\drafting\sheets\01130001270d006.dgn

LAST REVISION 00-00-00 | DATE PLOTTED => 17-AUG-2016 | TIME PLOTTED => 09:24

| Dist | COUNTY | ROUTE | POST MILES TOTAL PROJECT | SHEET No. | TOTAL SHEETS |
|---|---|---|---|---|---|
| 01 | Hum | 101 | 109.5/R125.8 | 30 | 100 |

REGISTERED CIVIL ENGINEER — DATE 05-23-16

May 23, 2016
PLANS APPROVAL DATE

REGISTERED PROFESSIONAL ENGINEER — DAVID A. MORGAN No. 72321 Exp. 6/30/16 CIVIL — STATE OF CALIFORNIA

*THE STATE OF CALIFORNIA OR ITS OFFICERS OR AGENTS SHALL NOT BE RESPONSIBLE FOR THE ACCURACY OR COMPLETENESS OF SCANNED COPIES OF THIS PLAN SHEET.*

| LOCATION (PM) | Lt/Rt/CL | ORIENTATION | SIGN TYPE | SIGN MESSAGE | PANEL SIZE | NEW POST SIZE | INSTALL ROADSIDE SIGN PANEL ON EXIST POST | ROADSIDE SIGN-ONE POST | REMOVE ROADSIDE SIGN | FURNISH SINGLE SHEET ALUMINUM SIGN (0.063"-UNFRAMED) | (0.080"-UNFRAMED) | (0.080"-FRAMED) | RETROREFLECTIVE COATING (TYPE XI) | COMMENTS |
|---|---|---|---|---|---|---|---|---|---|---|---|---|---|---|
| | | | | | | | EA | EA | EA | SQFT | SQFT | SQFT | SQFT | |
| 123.70 | Lt | FSBT | W11-20 | ELK CROSSING SYMBOL | 36"x36" | | 2 | | | 9.0 | | | 9.0 | |
| | | | SP(CA) | "CROSSING" | 30"x12" | | | | | 2.5 | | | 2.5 | |
| 123.76 | Lt | FSBT | R25(CA) | "PARK OFF PAVEMENT" | 24"x15" | | | | 1 | | | | | REMOVE "PARK OFF PAVEMENT" AND DO NOT REPLACE |
| 123.78 | Lt | FEBT | R1-1 | "STOP" | 30"x30" | | 1 | | | 6.3 | | | 6.3 | |
| 123.78 | Lt | FEBT | G26-2(CA) | "US 101" | 28"x24" | | 2 | | | 4.7 | | | | |
| | | | M6-4 | ARROWS | 21"x15" | | | | | 2.2 | | | | |
| 123.80 | Rt | FNBT | W1-2R | CURVE SYMBOL (Rt) | 36"x36" | | 2 | | | 9.0 | | | 9.0 | |
| | | | W13-1P | ADVISORY SPEED "45 MPH" | 30"x30" | | | | | 6.3 | | | 6.3 | |
| 123.89 | Lt | FSBT | W1-8L | CHEVRON SYMBOL (Lt) | 36"x48" | | 1 | | | 12.0 | | | 12.0 | |
| 123.90 | Lt | FSBT | W1-8L | CHEVRON SYMBOL (Lt) | 36"x48" | | 1 | | | 12.0 | | | 12.0 | |
| 123.91 | Lt | FSBT | W1-8L | CHEVRON SYMBOL (Lt) | 36"x48" | | 1 | | | 12.0 | | | 12.0 | |
| 123.92 | Lt | FSBT | W4-7R | COMBINATION CURVE/ADVISORY "45" | 60"x60" | | 1 | | | | | 25.0 | 25.0 | |
| 123.93 | Lt | FSBT | W1-8L | CHEVRON SYMBOL (Lt) | 36"x48" | | 1 | | | 12.0 | | | 12.0 | |
| 124.02 | Lt | FEBT | R1-1 | "STOP" | 30"x30" | | 1 | | | 6.3 | | | 6.3 | |
| 124.06 | Lt | FSBT | W1-2L | CURVE (Lt) | 36"x36" | | 2 | | | 9.0 | | | 9.0 | |
| | | | W13-1P | ADVISORY SPEED "45 MPH" | 30"x30" | | | | | 6.3 | | | 6.3 | |
| 124.27 | Rt | FNBT | W2-2R | SIDE ROAD SYMBOL (Rt) | 36"x36" | | 1 | | | 9.0 | | | 9.0 | |
| 124.38 | Rt | FNBT | G47(CA) | "NORTH" | 21"x9" | | 2 | | | 1.3 | | | | |
| | | | G26-2(CA) | "US 101" | 28"x24" | | | | | 4.7 | | | | |
| 124.40 | Lt | FSBT | G48(CA) | "SOUTH" | 21"x9" | | 2 | | | 1.3 | | | | |
| | | | G26-2(CA) | "US 101" | 28"x24" | | | | | 4.7 | | | | |
| 124.41 | Rt | FWBT | R1-1 | "STOP" | 30"x30" | | 1 | | | 6.3 | | | 6.3 | |
| 124.54 | Lt | FSBT | W2-2L | SIDE ROAD SYMBOL (Lt) | 36"x36" | | 1 | | | 9.0 | | | 9.0 | |
| 124.58 | Lt | FSBT | W8-5 | SLIPPERY | 36"x36" | | 1 | | | 9.0 | | | 9.0 | |
| 124.61 | Lt | FEBT | R1-1 | "STOP" | 30"x30" | | 1 | | | 6.3 | | | 6.3 | |
| 124.71 | Rt | FNBT | G11-5(CA) | LOST MAN CR BRIDGE 4-30 101 HUM 124.71 | 44"x24" | | 1 | | | 7.3 | | | | |
| 124.73 | Lt | FSBT | G11-5(CA) | LOST MAN CR BRIDGE 4-30 101 HUM 124.71 | 44"x24" | | 1 | | | 7.3 | | | | |
| 124.75 | Rt | FWBT | R1-1 | "STOP" | 30"x30" | | 1 | | | 6.3 | | | 6.3 | |
| 124.76 | Rt | FNBT | W1-6 | ONE-DIRECTION LARGE ARROW (Lt) | 48"x24" | | 2 | | | | 8.0 | | 8.0 | |
| | | | TYPE-N(CA) | MARKER | 18"x18" | | | | | | 2.3 | | 9.0 | |
| 124.78 | Rt | FNBT | W50(CA) | "ROCK SLIDE AREA" | 36"x36" | | 1 | | | 9.0 | | | 9.0 | |
| 124.80 | Rt | FNBT | W1-2R | CURVE (Rt) | 48"x48" | | 2 | | | 16.0 | | | 16.0 | |
| | | | W13-1P | ADVISORY SPEED "45 MPH" | 30"x30" | | | | | 6.3 | | | 6.3 | |
| 124.93 | Lt | FSBT | W1-2R | CURVE (Lt) | 48"x48" | | 2 | | | 16.0 | | | 16.0 | |
| | | | W13-1P | ADVISORY SPEED "45 MPH" | 30"x30" | | | | | 6.3 | | | 6.3 | |
| 125.14 | Rt | FNBT | W11-20 | ELK CROSSING SYMBOL | 48"x48" | | 2 | | | 16.0 | | | 16.0 | |
| | | | W71(CA) | "NEXT 2 MILES" | 32"x18" | | | | | 4.0 | | | 4.0 | |
| 125.31 | Lt | FNBT | W1-8R | CHEVRON SYMBOL (Rt) | 36"x48" | | 1 | | | 12.0 | | | 12.0 | |
| 125.32 | Lt | FNBT | W1-8R | CHEVRON SYMBOL (Rt) | 36"x48" | | 1 | | | 12.0 | | | 12.0 | |
| 125.34 | Lt | FNBT | W1-8R | CHEVRON SYMBOL (Rt) | 36"x48" | | 1 | | | 12.0 | | | 12.0 | |
| 125.36 | Lt | FNBT | W1-8R | CHEVRON SYMBOL (Rt) | 36"x48" | | 1 | | | 12.0 | | | 12.0 | |
| 125.38 | Lt | FNBT | W1-8R | CHEVRON SYMBOL (Rt) | 36"x48" | | 1 | | | 12.0 | | | 12.0 | |
| 125.38 | Lt | FSBT | W1-8L | CHEVRON SYMBOL (Lt) | 36"x48" | | 1 | | | 12.0 | | | 12.0 | |
| 125.40 | Lt | FNBT | W1-8R | CHEVRON SYMBOL (Rt) | 36"x48" | | 1 | | | 12.0 | | | 12.0 | |
| 125.40 | Lt | FSBT | W1-8L | CHEVRON SYMBOL (Lt) | 36"x48" | | 1 | | | 12.0 | | | 12.0 | |
| 125.42 | Lt | FNBT | W1-8R | CHEVRON SYMBOL (Rt) | 36"x48" | 4"x6" | | 1 | | 12.0 | | | 12.0 | |
| 125.41 | Lt | FNBT | W1-8R | CHEVRON SYMBOL (Rt) | 36"x48" | | 1 | | | 12.0 | | | 12.0 | ADD 1 CHEVRON FOR CONSISTANT CHEVRON SPACING |
| 125.42 | Lt | FSBT | W1-8L | CHEVRON SYMBOL (Lt) | 36"x48" | | 1 | | | 12.0 | | | 12.0 | |
| 125.44 | Lt | FNBT | W1-8R | CHEVRON SYMBOL (Rt) | 36"x48" | | 1 | | | 12.0 | | | 12.0 | |
| 125.44 | Lt | FSBT | W1-8L | CHEVRON SYMBOL (Lt) | 36"x48" | | 1 | | | 12.0 | | | 12.0 | |
| 125.46 | Lt | FNBT | W1-8R | CHEVRON SYMBOL (Rt) | 36"x48" | | 1 | | | 12.0 | | | 12.0 | |
| | | | | SUBTOTAL THIS SHEET | | | 49 | 1 | 1 | 423.7 | 10.3 | 25.0 | 432.2 | |
| | | | | SUBTOTAL SHEET SQ-1 | | | 56 | 0 | 0 | 525.8 | 12.0 | 247.5 | 778.4 | |
| | | | | SUBTOTAL SHEET SQ-2 | | | 47 | 1 | 1 | 318.0 | 32.0 | 156.0 | 489.3 | |
| | | | | SUBTOTAL SHEET SQ-3 | | | 46 | 7 | 6 | 441.0 | 72.0 | 0 | 356.5 | |
| | | | | SUBTOTAL SHEET SQ-4 | | | 47 | 7 | 6 | 435.5 | 40.0 | 0 | 342.1 | |
| | | | | SUBTOTAL SHEET SQ-5 | | | 53 | 2 | 1 | 350.5 | 51.3 | 0 | 317.9 | |
| | | | | SUBTOTAL SHEET SQ-6 | | | 49 | 3 | 4 | 409.8 | 16.0 | 0 | 336.1 | |
| | | | | TOTAL | | | 347 | 21 | 19 | 2904.3 | 233.6 | 428.5 | 3052.5 | |

# SIGN QUANTITIES

SQ-7

REVISED BY | DATE REVISED
BRIAN THOMAS | ROBERT KING
CALCULATED-DESIGNED BY | CHECKED BY
FUNCTIONAL SUPERVISOR: DAVID MORGAN

STATE OF CALIFORNIA - DEPARTMENT OF TRANSPORTATION
Caltrans®
SAFETY

P:\PROJ\01\41500\drafting\sheets\0113000127od007.dgn

LAST REVISION 00-00-00 | DATE PLOTTED => 17-AUG-2016 | TIME PLOTTED => 09:24

| Dist | COUNTY | ROUTE | POST MILES TOTAL PROJECT | SHEET No. | TOTAL SHEETS |
|---|---|---|---|---|---|
| 01 | Hum | 101 | 109.5/R125.8 | 31 | 100 |

Robert King 5-5-16
REGISTERED CIVIL ENGINEER DATE

May 23, 2016
PLANS APPROVAL DATE

REGISTERED PROFESSIONAL ENGINEER ROBERT W. KING No. C-58530 Exp. 12-31-16 CIVIL STATE OF CALIFORNIA

THE STATE OF CALIFORNIA OR ITS OFFICERS OR AGENTS SHALL NOT BE RESPONSIBLE FOR THE ACCURACY OR COMPLETENESS OF SCANNED COPIES OF THIS PLAN SHEET.

## GUARDRAIL

| PM Beg | PM END | L†/R† | REMOVE GUARDRAIL LF | RESET MARKER EA | REMOVE MARKER EA | GUARD RAILING DELINEATOR EA | OBJECT MARKER EA | MIDWEST GUARDRAIL SYSTEM (7' WOOD POST) LF | RECONSTRUCT METAL BEAM GUARDRAIL (SPECIAL) * LF | METAL BEAM GUARDRAIL (ELEMENT) EA | RECONSTRUCT GUARDRAIL (7' POST) LF | MIDWEST GUARDRAIL SYSTEM (SPECIAL) LF | MIDWEST GUARDRAIL SYSTEM (WOOD POST) LF | NOTES |
|---|---|---|---|---|---|---|---|---|---|---|---|---|---|---|
| 109.85 | 109.90 | R† | 262.5 | | | 6 | | | | | | | 262.5 | |
| 109.85 | 109.90 | L† | 250.0 | | | 5 | | | | | | | 250.0 | |
| 111.76 | 111.98 | L† | | | | 80 | | | 162.5 | 52 | 925.0 | | | 162.5' USE DOUBLE MBGR (ELEMENT) FOR RECONSTRUCT MBGR (SPECIAL) |
| R113.50 | R113.61 | L† | 600.0 | 3 | | 5 | | | | | | | 562.5 | |
| T114.06 | T114.26 | L† | 1025.0 | | | 9 | | 50.0 | | | | | 937.5 | |
| 114.51 | 114.54 | R† | 175.0 | 2 | | 2 | | | | | | 62.5 | 37.5 | 62.5' ATTACH MGS STEEL POSTS TO BOX CULVERT |
| 114.51 | 114.54 | L† | 175.0 | 2 | | 2 | | | | | | 62.5 | 37.5 | 62.5' ATTACH MGS STEEL POSTS TO BOX CULVERT |
| 114.69 | 114.72 | L† | 137.5 | | 1 | 2 | 1 | | | | | 37.5 | 50.0 | 37.5' ATTACH MGS STEEL POSTS TO BOX CULVERT, TYPE P (CA) R† |
| 114.70 | 114.73 | R† | 150.0 | | 1 | 2 | 1 | | | | | 37.5 | 50.0 | 37.5' ATTACH MGS STEEL POSTS TO BOX CULVERT, TYPE P (CA) R† |
| 115.51 | 115.55 | L† | 200.0 | | | 5 | | | | | | | 125.0 | |
| 116.34 | 116.41 | L† | 350.0 | | | 6 | | | | | | | 312.5 | |
| 120.00 | 120.01 | R† | 62.5 | 1 | | 2 | 1 | | | | | | | TYPE P (CA) R† |
| 120.00 | 120.01 | L† | 62.5 | | | 2 | | | | | | | 37.5 | |
| 120.02 | 120.03 | R† | 62.5 | | | 2 | | | | | | | 37.5 | |
| 120.02 | 120.03 | L† | 62.5 | | | 2 | 1 | | | | | | | TYPE P (CA) R† |
| 121.10 | 121.11 | R† | 62.5 | | | 2 | 1 | | | | | | | TYPE P (CA) R† |
| 121.10 | 121.11 | L† | 37.5 | | | 2 | | | | | | | 12.5 | |
| 121.13 | 121.14 | R† | 37.5 | | | 2 | | | | | | | 12.5 | |
| 121.13 | 121.14 | L† | 62.5 | | | 2 | 1 | | | | | | 12.5 | TYPE P (CA) R† |
| 121.95 | 122.25 | R† | 1612.5 | 2 | | 27 | | | | | | | 1537.5 | |
| 122.26 | 122.61 | R† | | 2 | | 36 | | | | | 1812.5 | | | |
| 122.84 | 122.86 | R† | 62.5 | | | 2 | 1 | | | | | | 12.5 | TYPE P (CA) R† |
| 122.85 | 122.86 | L† | 62.5 | | | 2 | | | | | | | 37.5 | |
| 122.88 | 122.89 | R† | 62.5 | | | 2 | | | | | | | | |
| 122.88 | 122.90 | L† | 62.5 | | | 2 | 1 | | | | | | 12.5 | TYPE P (CA) R† |
| 124.48 | 124.50 | R† | 125.0 | 1 | | 4 | 1 | | | | | 37.5 | 12.5 | 37.5' ATTACH MGS STEEL POSTS TO BOX CULVERT, TYPE P (CA) R† |
| 124.48 | 124.50 | L† | 125.0 | 1 | | 3 | 1 | | | | | 37.5 | 12.5 | 37.5' ATTACH MGS STEEL POSTS TO BOX CULVERT, TYPE P (CA) R† |
| 124.70 | 124.71 | R† | 62.5 | | | 2 | 1 | | | | | | | TYPE P (CA) R† |
| 124.70 | 124.71 | L† | 62.5 | | | 2 | | | | | | | 37.5 | |
| 124.75 | 124.76 | R† | 62.5 | | | 2 | | | | | | | 37.5 | |
| 124.75 | 124.76 | L† | 62.5 | | | 2 | 1 | | | | | | | TYPE P (CA) R† |
| 124.83 | 124.93 | L† | 537.5 | 1 | | 9 | | 250.0 | | | | | 250.0 | |
| 125.28 | 125.47 | L† | | | | 11 | | | | | 950.0 | | | |
| | | TOTAL | 6675 | 15 | 2 | 246 | 12 | 300.0 | 162.5 | 52 | 3687.5 | 275.0 | 4687.5 | |

* RECONSTRUCT MBGR (SPECIAL) UTILIZE DOUBLE RAIL

# SUMMARY OF QUANTITIES

Q-1

REVISED BY | DATE REVISED
ROBERT KING | KELLY B. TIMMONS
CALCULATED-DESIGNED BY | CHECKED BY
FUNCTIONAL SUPERVISOR | KELLY B. TIMMONS
STATE OF CALIFORNIA - DEPARTMENT OF TRANSPORTATION
Caltrans DESIGN

P:\PROJ\01\41500\drafting\sheets\0113000127pa001.dgn

LAST REVISION 00-00-00 | DATE PLOTTED => 17-AUG-2016 | TIME PLOTTED => 09:24

| Dist | COUNTY | ROUTE | POST MILES TOTAL PROJECT | SHEET No. | TOTAL SHEETS |
|---|---|---|---|---|---|
| 01 | Hum | 101 | 109.5/R125.8 | 32 | 100 |

Robert King 5-5-16
REGISTERED CIVIL ENGINEER DATE

May 23, 2016
PLANS APPROVAL DATE

REGISTERED PROFESSIONAL ENGINEER ROBERT W. KING No. C-58530 Exp. 12-31-16 CIVIL STATE OF CALIFORNIA

*THE STATE OF CALIFORNIA OR ITS OFFICERS OR AGENTS SHALL NOT BE RESPONSIBLE FOR THE ACCURACY OR COMPLETENESS OF SCANNED COPIES OF THIS PLAN SHEET.*

**NOTE:**

(N) NOT A SEPARATE PAY ITEM. FOR INFORMATION ONLY.

## GUARDRAIL CONNECTION AND END TREATMENT

| LOCATION PM Beg | LOCATION PM END | L+/R+ | TRANSITION RAILING (TYPE WB-31) EA | CONCRETE BARRIER (TRANSITION) LF | END ANCHOR ASSEMBLY (TYPE SFT) EA | A1+ IN-LINE TERMINAL SYSTEM EA | A1+ FLARED TERMINAL SYSTEM EA | BURIED POST ANCHOR (N) EA | TREATED WOOD WASTE LB | VEGETATION CONTROL (MINOR CONCRETE) SQYD | NOTES |
|---|---|---|---|---|---|---|---|---|---|---|---|
| 109.85 | 109.90 | R+ | | | | | | 2 | 3,386 | 174 | |
| 109.85 | 109.90 | L+ | | | | | | 2 | 3,225 | 168 | |
| 111.76 | 111.98 | L+ | | | | 1 | 1 | | 14,996 | 798 | |
| R113.50 | R113.61 | L+ | | | 1 | | 1 | | 7,740 | 417 | |
| T114.06 | T114.26 | L+ | | | 1 | | 1 | | 13,223 | 701 | |
| 114.51 | 114.54 | R+ | | | | | 2 | | 2,258 | 153 | |
| 114.51 | 114.54 | L+ | | | | | 2 | | 2,258 | 153 | |
| 114.69 | 114.72 | L+ | | | | | 2 | | 2,096 | 135 | |
| 114.70 | 114.73 | R+ | | | | | 2 | | 2,096 | 137 | |
| 115.51 | 115.55 | L+ | | | | | 2 | | 2,580 | 168 | |
| 116.34 | 116.41 | L+ | | | | 1 | | 1 | 4,515 | 243 | |
| 120.00 | 120.01 | R+ | 1 | | | 1 | | | 806 | 53 | |
| 120.00 | 120.01 | L+ | 1 | 6.0 | 1 | | | | 806 | 43 | REDWOOD CREEK OVERFLOW (04-0034) |
| 120.02 | 120.03 | R+ | 1 | 6.0 | 1 | | | | 806 | 43 | REDWOOD CREEK OVERFLOW (04-0034) |
| 120.02 | 120.03 | L+ | 1 | | | | 1 | | 806 | 59 | |
| 121.10 | 121.11 | R+ | 1 | | | | 1 | | 806 | 59 | |
| 121.10 | 121.11 | L+ | 1 | | 1 | | | | 484 | 24 | |
| 121.13 | 121.14 | R+ | 1 | | 1 | | | | 484 | 25 | |
| 121.13 | 121.14 | L+ | 1 | | | | 1 | | 968 | 63 | |
| 121.95 | 122.25 | R+ | | | | 1 | 1 | | 20,801 | 1101 | |
| 122.26 | 122.61 | R+ | | | | 1 | 1 | | 24,349 | 1287 | |
| 122.84 | 122.86 | R+ | 1 | | | 1 | | | 968 | 60 | |
| 122.85 | 122.86 | L+ | 1 | 6.0 | 1 | | | | 806 | 41 | PRAIRIE CREEK BRIDGE (04-0029) |
| 122.88 | 122.89 | R+ | 1 | 6.0 | | | 1 | | 806 | 59 | PRAIRIE CREEK BRIDGE (04-0029) |
| 122.88 | 122.90 | L+ | 1 | | | 1 | | | 968 | 60 | |
| 124.48 | 124.50 | R+ | | | | | 2 | | 1,613 | 117 | |
| 124.48 | 124.50 | L+ | | | | | 2 | | 1,613 | 117 | |
| 124.70 | 124.71 | R+ | 1 | | | | 1 | | 806 | 59 | |
| 124.70 | 124.71 | L+ | 1 | 7.1 | 1 | | | | 806 | 41 | LOST MAN CREEK BRIDGE (04-0030) |
| 124.75 | 124.76 | R+ | 1 | 7.1 | 1 | | | | 806 | 41 | LOST MAN CREEK BRIDGE (04-0030) |
| 124.75 | 124.76 | L+ | 1 | | | | 1 | | 806 | 57 | |
| 124.83 | 124.93 | L+ | | | 1 | 1 | | | 6,934 | 377 | |
| 125.28 | 125.47 | L+ | | | | | 2 | | 13,223 | 717 | |
| | | TOTAL | 16 | 38.2 | 10 | 8 | 27 | 5 | 139,644 | 7750 | |

## TRAFFIC MANAGEMENT SYSTEM ELEMENTS TO MAINTAIN

| LOCATION PM | R+/L+ | TYPE | COMMENTS |
|---|---|---|---|
| 109.68 | R+ | UTILITY BOX | |
| 109.71 | R+ | UTILITY BOX | |
| 109.71 | L+ | UTILITY BOX | |
| 109.75 | L+ | UTILITY BOX | |
| 109.79 | L+ | UTILITY BOX | |
| 109.82 | L+ | UTILITY BOX | |
| 109.86 | L+ | UTILITY BOX | |
| 109.90 | L+ | UTILITY BOX | |
| 109.95 | L+ | UTILITY BOX | |
| 109.99 | L+ | UTILITY BOX | |
| 110.02 | L+ | UTILITY BOX | |
| 110.06 | L+ | UTILITY BOX | |
| 110.10 | L+ | UTILITY BOX | |
| 110.13 | L+ | UTILITY BOX | |
| 110.17 | L+ | UTILITY BOX | |
| 110.18 | R+ | RADAR FEEDBACK SIGN | |
| 110.21 | L+ | UTILITY BOX | |
| 110.27 | L+ | UTILITY BOX | |
| 110.31 | L+ | UTILITY BOX | |
| 110.38 | L+ | UTILITY BOX | |
| 110.42 | L+ | UTILITY BOX | |
| 110.46 | L+ | RADAR FEEDBACK SIGN | |
| 125.72 | L+ | TRAFFIC COUNT STATION | REPLACE TRAFFIC LOOPS |

## SUMMARY OF QUANTITIES

Q-2

REVISED BY | DATE REVISED
ROBERT KING | KELLY B. TIMMONS
CALCULATED-DESIGNED BY | CHECKED BY
FUNCTIONAL SUPERVISOR: KELLY B. TIMMONS

STATE OF CALIFORNIA - DEPARTMENT OF TRANSPORTATION
Caltrans
DESIGN

P:\PROJ\01\41500\drafting\sheets\0113000127pa002.dgn

LAST REVISION 00-00-00 | DATE PLOTTED => 17-AUG-2016 | TIME PLOTTED => 09:24

| Dist | COUNTY | ROUTE | POST MILES TOTAL PROJECT | SHEET No. | TOTAL SHEETS |
|---|---|---|---|---|---|
| 01 | Hum | 101 | 109.5/R125.8 | 33 | 100 |

Robert King 5-5-16
REGISTERED CIVIL ENGINEER DATE

May 23, 2016
PLANS APPROVAL DATE

REGISTERED PROFESSIONAL ENGINEER ROBERT W. KING No. C-58530 Exp. 12-31-16 CIVIL STATE OF CALIFORNIA

*THE STATE OF CALIFORNIA OR ITS OFFICERS OR AGENTS SHALL NOT BE RESPONSIBLE FOR THE ACCURACY OR COMPLETENESS OF SCANNED COPIES OF THIS PLAN SHEET.*

**NOTE:**

(N) NOT A SEPARATE PAY ITEM. FOR INFORMATION ONLY.

## DRIVEWAY CONNECTION

| LOCATION | | WIDTH (N) | CLASS 2 AGGREGATE BASE | PLACE HMA (Misc AREA) | HMA (TYPE A) | TACK COAT |
|---|---|---|---|---|---|---|
| PM | R+/L+ | LF | CY | SQYD | TON | TON |
| 109.62 | R+ | 53 | 2.5 | | | |
| 109.65 | R+ | 46 | 2.1 | | | |
| 113.95 | L+ | 125 | | 69 | 1.3 | 0.02 |
| 115.23 | L+ | 30 | 1.4 | | | |
| 115.25 | L+ | 35 | 1.6 | | | |
| 115.28 | L+ | 180 | 8.3 | | | |
| 115.32 | L+ | 500 | | 278 | 5.2 | 0.07 |
| 115.83 | R+ | 20 | 0.9 | | | |
| 117.45 | R+ | 45 | 2.1 | | | |
| 117.99 | R+ | 40 | | 22 | 0.4 | 0.01 |
| 119.08 | R+ | 45 | | 25 | 0.5 | 0.01 |
| 119.67 | R+ | 48 | | 27 | 0.5 | 0.01 |
| 119.67 | L+ | 38 | | 21 | 0.4 | 0.01 |
| 120.18 | L+ | 45 | 2.1 | | | |
| 120.20 | L+ | 32 | | 18 | 0.3 | 0.01 |
| 120.28 | L+ | 400 | | 222 | 4.2 | 0.06 |
| 120.36 | L+ | 48 | 2.2 | | | |
| 120.37 | L+ | 22 | 1.0 | | | |
| 120.38 | R+ | 170 | 7.9 | | | |
| 120.38 | L+ | 36 | 1.7 | | | |
| 120.40 | L+ | 62 | | 34 | 0.6 | 0.01 |
| 120.47 | L+ | 35 | 1.6 | | | |
| 120.56 | R+ | 32 | 1.5 | | | |
| 120.61 | R+ | 80 | 3.7 | | | |
| 120.62 | R+ | 42 | 1.9 | | | |
| 120.63 | L+ | 23 | 1.1 | | | |
| 120.65 | L+ | 18 | 0.8 | | | |
| 120.68 | R+ | 75 | | 42 | 0.8 | 0.01 |
| 120.72 | R+ | 75 | | 42 | 0.8 | 0.01 |
| 120.76 | L+ | 66 | 3.1 | | | |
| 120.76 | R+ | 75 | | 42 | 0.8 | 0.01 |
| 120.79 | L+ | 95 | | 53 | 1.0 | 0.01 |
| 121.72 | L+ | 25 | 1.2 | | | |
| 121.73 | L+ | 20 | 0.9 | | | |
| 122.03 | L+ | 40 | | 22 | 0.4 | 0.01 |
| 123.44 | R+ | 35 | 1.6 | | | |
| 123.51 | R+ | 160 | 7.4 | | | |
| 123.54 | L+ | 55 | | 31 | 0.6 | 0.01 |
| 123.54 | R+ | 36 | | 20 | 0.4 | 0.01 |
| 123.99 | L+ | 35 | | 19 | 0.4 | 0.01 |
| 124.00 | R+ | 46 | | 26 | 0.5 | 0.01 |
| 124.05 | R+ | 60 | | 33 | 0.6 | 0.01 |
| 124.06 | L+ | 70 | | 39 | 0.7 | 0.01 |
| 124.37 | L+ | 52 | 2.4 | | | |
| 124.42 | L+ | 100 | | 56 | 1.0 | 0.01 |
| 124.78 | L+ | 30 | | 17 | 0.3 | 0.01 |
| 125.72 | L+ | 52 | | 29 | 0.5 | 0.01 |
| | | TOTAL | 61.0 | 1187 * | 22.2 * | 0.35 ** |

* QUANTITY INCLUDED IN HMA DIKE AND Misc HMA TABLE ON SHEET Q-4.
** QUANTITY INCLUDED IN ROADWAY QUANTITIES ON SHEETS Q-4 & Q-5.

## SINUSOIDAL RUMBLE STRIP

| LOCATION (PM) | | DETAIL No. | L+/R+/CL | DETAIL LENGTH (N) | SHOULDER RUMBLE STRIP (SINUSOIDAL) | | | CENTERLINE RUMBLE STRIP (SINUSOIDAL) |
|---|---|---|---|---|---|---|---|---|
| | | | | | STANDARD | MODIFIED | EDGELINE | |
| Beg | END | | | LF | STA | STA | STA | STA |
| 109.56 | 109.62 | 27B | L+ | 317 | 3.2 | | | |
| 109.58 | 112.52 | 22 | CL | 15523 | | | | 155.2 |
| 109.62 | 109.69 | 27B | L+ | 370 | | | 3.7 | |
| 112.53 | 112.58 | 27B | L+ | 264 | | | 2.6 | |
| 112.56 | 112.62 | 22 | CL | 317 | | | | 3.2 |
| 112.57 | R112.95 | 27B | R+ | 2006 | | | 20.1 | |
| 112.66 | R112.75 | 22 | CL | 475 | | | | 4.8 |
| R112.75 | T114.44 | 29 | CL | 7973 | | | | 159.5 |
| R112.95 | R113.66 | 27B | R+ | 3749 | | 37.5 | | |
| R113.04 | R113.23 | 27B | L+ | 1003 | | 10.0 | | |
| R113.23 | R113.96 | 27B | L+ | 3854 | | | 38.5 | |
| R113.96 | T114.03 | 27B | L+ | 370 | | 3.7 | | |
| T114.48 | 114.56 | 22 | CL | 422 | | | | 4.2 |
| 114.60 | 114.77 | 22 | CL | 898 | | | | 9.0 |
| 114.81 | 120.14 | 22 | CL | 28142 | | | | 281.4 |
| 115.28 | 116.52 | 27B | L+ | 6547 | 65.5 | | | |
| 115.36 | 116.46 | 27B | R+ | 5808 | | 58.1 | | |
| 116.72 | 116.81 | 27B | L+ | 475 | | | 4.8 | |
| 116.94 | 117.46 | 27B | R+ | 2746 | | 27.5 | | |
| 116.97 | 117.01 | 27B | L+ | 211 | | | 2.1 | |
| 117.07 | 117.35 | 27B | L+ | 1478 | | | 14.8 | |
| 117.41 | 117.45 | 27B | L+ | 211 | | | 2.1 | |
| 117.56 | 117.61 | 27B | L+ | 264 | | | 2.6 | |
| 117.80 | 117.99 | 27B | R+ | 1003 | | | 10.0 | |
| 119.04 | 119.45 | 27B | R+ | 2165 | 21.6 | | | |
| 119.05 | 119.17 | 27B | L+ | 634 | 6.3 | | | |
| 119.23 | 119.93 | 27B | L+ | 3696 | | 37.0 | | |
| 119.45 | 119.95 | 27B | R+ | 2640 | | 26.4 | | |
| 121.80 | 123.35 | 22 | CL | 8184 | | | | 81.8 |
| 122.76 | 122.84 | 27B | R+ | 422 | 4.2 | | | |
| 122.78 | 122.84 | 27B | L+ | 317 | | | 3.2 | |
| 122.87 | 122.93 | 27B | L+ | 317 | | | 3.2 | |
| 123.60 | 123.80 | 22 | CL | 1056 | | | | 10.6 |
| 123.84 | 124.40 | 22 | CL | 2957 | | | | 29.6 |
| 124.03 | 124.33 | 27B | L+ | 1584 | | | 15.8 | |
| 124.44 | 124.58 | 22 | CL | 739 | | | | 7.4 |
| 124.44 | 124.58 | 27B | L+ | 739 | | | 7.4 | |
| 124.57 | 124.71 | 27B | R+ | 739 | 7.4 | | | |
| 124.62 | 124.73 | 22 | CL | 581 | | | | 5.8 |
| 124.64 | 124.71 | 27B | L+ | 370 | 3.7 | | | |
| 124.77 | 125.73 | 22 | CL | 5069 | | | | 50.7 |
| 124.77 | 125.20 | 27B | R+ | 2270 | | | 22.7 | |
| 124.82 | 125.20 | 27B | L+ | 2006 | | | 20.1 | |
| | | | | SUBTOTAL | 111.9 | 200.2 | 173.7 | 803.2 |
| | | | | TOTAL | | 485.8 | | 803.2 |

# SUMMARY OF QUANTITIES

Q-3

REVISED BY | DATE REVISED
ROBERT KING | KELLY B. TIMMONS
CALCULATED-DESIGNED BY | CHECKED BY
FUNCTIONAL SUPERVISOR: KELLY B. TIMMONS

STATE OF CALIFORNIA - DEPARTMENT OF TRANSPORTATION
Caltrans
DESIGN

P:\PROJ\01\41500\drafting\sheets\0113000127pa003.dgn

LAST REVISION 00-00-00 | DATE PLOTTED => 17-AUG-2016 | TIME PLOTTED => 09:24

| Dist | COUNTY | ROUTE | POST MILES TOTAL PROJECT | SHEET No. | TOTAL SHEETS |
|---|---|---|---|---|---|
| 01 | Hum | 101 | 109.5/R125.8 | 34 | 100 |

Robert King 5-5-16
REGISTERED CIVIL ENGINEER DATE

May 23, 2016
PLANS APPROVAL DATE

REGISTERED PROFESSIONAL ENGINEER ROBERT W. KING No. C-58530 Exp. 12-31-16 CIVIL STATE OF CALIFORNIA

*THE STATE OF CALIFORNIA OR ITS OFFICERS OR AGENTS SHALL NOT BE RESPONSIBLE FOR THE ACCURACY OR COMPLETENESS OF SCANNED COPIES OF THIS PLAN SHEET.*

**NOTE:**
(N) NOT A SEPARATE PAY ITEM. FOR INFORMATION ONLY.

**ABBREVIATIONS**
DWS - DETECTABLE WARNING SURFACE

## CURB RAMPS

| LOCATION RAMP | LOCATION PM | R+/L+ | REMOVE CONCRETE CURB AND SIDEWALK SQYD | HMA (TYPE A) TON | PLACE HMA (Misc AREA) SQYD | DETECTABLE WARNING SURFACE SQFT | MINOR CONCRETE (CURB, SIDWALK AND CURB RAMP) CY | COMMENTS |
|---|---|---|---|---|---|---|---|---|
| 1 | 120.94 | L+ | 3.6 | 0.7 | 1.3 | 17.6 | 1.2 | DWS - 4.2'x4.2' |
| 2 | 120.95 | L+ | 16.0 | 3.0 | 5.9 | 55.0 | 5.3 | DWS - 10'x5.5' |
| | 120.95 | R+ | | | | 24.0 | | NO RAMP - DWS 8'x3' Beg OF CROSSWALK |
| 3 | 121.01 | L+ | 10.6 | 2.1 | 4.2 | 15.4 | 3.5 | DWS - 4.4'x3.5' |
| 4 | 121.03 | L+ | 13.0 | 2.7 | 5.4 | 24.3 | 4.3 | DWS - 8.1'x3' |
| | | R+ | | | | 24.0 | | NO RAMP - DWS 8'x3' Beg OF CROSSWALK |
| 5 | 121.29 | L+ | 24.5 | 3.5 | 7.0 | 20.4 | 8.1 | DWS - 6.8'x3' |
| | | R+ | | | | 27.0 | | NO RAMP - DWS 9'x3' Beg OF CROSSWALK |
| 6 | 121.30 | L+ | 12.5 | 1.7 | 3.4 | 17.4 | 4.1 | DWS - 5.8'x3' |
| 7 | 121.33 | L+ | 18.5 | 1.7 | 3.4 | 13.5 | 6.1 | DWS - 4.5'x3' |
| 8 | 121.34 | L+ | 18.5 | 2.6 | 5.2 | 13.5 | 6.1 | DWS - 4.5'x3' |
| 9 | 121.39 | L+ | 12.1 | 2.0 | 4.0 | 15.0 | 4.0 | DWS - 5'x3' |
| | | TOTAL | 129.3 | 20.0 * | 39.8 * | 267.1 | 42.7 | |

* QUANTITIES INCLUDED IN HMA DIKE AND Misc HMA TABLE ON THIS SHEET

## ADJUST WATER VALVE BOX

| LOCATION (PM) | R+/L+ | ADJUST VALVE BOX |
|---|---|---|
| 120.81 | L+ | 1 |
| 120.93 | L+ | 1 |
| 120.94 | L+ | 2 |
| 121.00 | L+ | 1 |
| 121.03 | L+ | 1 |
| 121.23 | L+ | 1 |
| 121.25 | R+ | 1 |
| 121.27 | R+ | 1 |
| 121.43 | R+ | 1 |
| 121.52 | L+ | 1 |
| 121.57 | L+ | 1 |
| 121.68 | L+ | 1 |
| 123.10 | R+ | |
| | TOTAL | 13 |

## HMA DIKE AND MISCELLANEOUS HMA

| LOCATION (PM) PM BG | PM END | R+/L+ | DIKE TYPE | REMOVE AC DIKE LF | PLACE HMA DIKE TYPE A LF | PLACE HMA DIKE TYPE D LF | HMA (TYPE A) TONS | PLACE HMA (Misc AREA) SQYD |
|---|---|---|---|---|---|---|---|---|
| 109.57 | 109.63 | R+ | D | 317 | | 317 | 9.3 | |
| 110.52 | 110.62 | R+ | A | 528 | 528 | | 7.1 | |
| 112.13 | 112.25 | R+ | A | 634 | 634 | | 8.6 | |
| 112.54 | R112.69 | R+ | A | 792 | 792 | | 10.7 | |
| R112.79 | R112.98 | L+ | D | 1,003 | | 1003 | 29.4 | |
| R112.81 | | L+ | | | | | 0.3 | 2.0 |
| R112.88 | | L+ | | | | | 0.3 | 2.0 |
| R113.31 | R113.45 | R+ | D | 739 | | 739 | 21.7 | |
| R113.66 | R113.70 | R+ | D | 211 | | 211 | 6.2 | |
| R113.72 | R113.78 | L+ | D | 317 | | 317 | 9.3 | |
| R113.97 | | L+ | | | | | 0.3 | 2.0 |
| T114.45 | 114.51 | R+ | D | 317 | | 317 | 9.3 | |
| 115.65 | 115.83 | R+ | A | 950 | 950 | | 12.8 | |
| 115.83 | 115.91 | R+ | A | 422 | 422 | | 5.7 | |
| 115.97 | 115.99 | R+ | A | 106 | 106 | | 1.4 | |
| 116.02 | 116.14 | R+ | A | 634 | 634 | | 8.6 | |
| 116.30 | 116.45 | R+ | A | 792 | 792 | | 10.7 | |
| 116.52 | 116.68 | L+ | D | 845 | | 845 | 24.8 | |
| 116.52 | | L+ | | | | | 0.3 | 2.0 |
| 116.64 | | L+ | | | | | 0.3 | 2.0 |
| 116.97 | 117.24 | R+ | D | 1,426 | | 1426 | 41.8 | |
| 117.30 | 117.45 | R+ | D | 792 | | 792 | 23.2 | |
| 117.32 | 117.35 | L+ | D | 158 | | 158 | 4.6 | |
| 117.82 | 117.89 | R+ | D | 370 | | 370 | 10.8 | |
| 121.17 | 121.22 | R+ | D | 264 | | 264 | 7.7 | |
| 124.56 | 124.63 | R+ | A | 370 | 370 | | 5.0 | |
| SUBTOTAL THIS TABLE | | | | 11,987 | 5228 | 6759 | 270.2 | 10.0 |
| SUBTOTAL FROM DI & OSD THIS SHEET | | | | | | | 1.5 | 10.0 |
| SUBTOTAL FROM CURB RAMPS THIS SHEET | | | | | | | 20.0 | 39.8 |
| SUBTOTAL FROM Dwy CONNECTION Sht Q-3 | | | | | | | 22.2 | 1187.0 |
| | | | TOTAL | 11,987 | 5228 | 6759 | 313.9 | 1246.8 |

## DRAINAGE INLET AND OVERSIDE DRAIN

| LOCATION (PM) | L+/R+ | ADJUST INLET EA | ADJUST OSD EA | HMA (TYPE A) TON | PLACE HMA (Misc AREA) SQYD |
|---|---|---|---|---|---|
| 110.58 | R+ | 1 | | | |
| 112.05 | R+ | 1 | | | |
| 112.11 | R+ | 1 | | | |
| 112.19 | R+ | 1 | | | |
| R112.81 | L+ | | 1 | 0.3 | 2 |
| R112.82 | R+ | 1 | | | |
| R112.86 | R+ | 1 | | | |
| R112.88 | L+ | | 1 | 0.3 | 2 |
| R112.96 | R+ | 1 | | | |
| R112.97 | L+ | | 1 | 0.3 | 2 |
| R113.03 | R+ | 1 | | | |
| R113.09 | R+ | 1 | | | |
| R113.13 | R+ | 1 | | | |
| R113.20 | R+ | 1 | | | |
| R113.24 | R+ | 1 | | | |
| T114.01 | R+ | 1 | | | |
| 115.81 | R+ | 1 | | | |
| 116.02 | R+ | 1 | | | |
| 116.17 | R+ | 1 | | | |
| 116.34 | R+ | 1 | | | |
| 116.52 | L+ | | 1 | 0.3 | 2 |
| 116.59 | L+ | 1 | | | |
| 116.64 | L+ | | 1 | 0.3 | 2 |
| 116.68 | R+ | 1 | | | |
| 116.80 | R+ | 1 | | | |
| 117.30 | R+ | 1 | | | |
| 117.55 | L+ | 1 | | | |
| 117.70 | L+ | 1 | | | |
| 121.23 | R+ | 1 | | | |
| 123.10 | R+ | 1 | | | |
| | TOTAL | 25 | 5 | 1.5 * | 10 * |

* QUANTITY INCLUDED IN HMA DIKE AND Misc HMA TABLE ON THIS SHEET

# SUMMARY OF QUANTITIES

Q-4

REVISED BY | DATE REVISED
ROBERT KING | KELLY B. TIMMONS
CALCULATED-DESIGNED BY | CHECKED BY
FUNCTIONAL SUPERVISOR
KELLY B. TIMMONS

STATE OF CALIFORNIA - DEPARTMENT OF TRANSPORTATION
Caltrans
DESIGN

P:\PROJ\01\41500\drafting\sheets\0113000127pa004.dgn

LAST REVISION 00-00-00 | DATE PLOTTED => 17-AUG-2016 | TIME PLOTTED => 09:24

| Dist | COUNTY | ROUTE | POST MILES TOTAL PROJECT | SHEET No. | TOTAL SHEETS |
|---|---|---|---|---|---|
| 01 | Hum | 101 | 109.5/R125.8 | 35 | 100 |

Robert King 5-5-16
REGISTERED CIVIL ENGINEER DATE

May 23, 2016
PLANS APPROVAL DATE

REGISTERED PROFESSIONAL ENGINEER ROBERT W. KING No. C-58530 Exp. 12-31-16 CIVIL STATE OF CALIFORNIA

THE STATE OF CALIFORNIA OR ITS OFFICERS OR AGENTS SHALL NOT BE RESPONSIBLE FOR THE ACCURACY OR COMPLETENESS OF SCANNED COPIES OF THIS PLAN SHEET.

**ABBREVIATIONS**

LNMI LANE MILE

## ROADWAY QUANTITIES

| LOCATION (PM) Beg | END | R+/L+ | COLD PLANE AC PAVEMENT SQYD | SHOULDER BACKING TON | CRACK TREATMENT LNMI | REPLACE AC SURFACING CY | RUBBERIZED HOT MIX ASPHALT (GAP GRADED) TON | ASPHALTIC EMULSION (BONDED WEARING COURSE) TON | RUBBERIZED HOT MIX ASPHALT-GAP GRADED (BONDED WEARING COURSE) TON | TACK COAT TON | NOTES |
|---|---|---|---|---|---|---|---|---|---|---|---|
| 109.56 | 111.30 | R+/L+ | | 400 | | | 3,936 | 26.00 | 2,220 | 9.00 | |
| 109.56 | 110.47 | R+/L+ | 17,730 | | | | | | | | COLD PLANE 0.25′ |
| 110.47 | 110.49 | R+/L+ | 610 | | | | | | | | CONFORM |
| 111.28 | 111.30 | R+/L+ | 610 | | | | | | | | CONFORM |
| 111.70 | 111.72 | R+/L+ | 610 | | | | | | | | CONFORM |
| 111.70 | 125.73 | R+/L+ | | 3640 | 4 | 2090 | 35,420.0 | 234.00 | 20,430.0 | 81.00 | |
| 112.54 | | R+ | 133 | | | | 13.5 | 0.09 | 7.2 | 0.03 | KANE Rd |
| 112.63 | | L+ | 139 | | | | 14.1 | 0.09 | 7.5 | 0.03 | BEACH ACCESS Rd |
| 114.46 | | L+ | 167 | | | | 16.9 | 0.11 | 9.0 | 0.04 | MCDONALD Rd |
| 114.46 | | R+ | 139 | | | | 14.1 | 0.09 | 7.5 | 0.03 | MCDONALD Rd |
| 114.52 | 114.54 | R+/L+ | 470 | | | | | | | | CONFORM - MCDONALD Cr Br - BB |
| 114.55 | 114.57 | R+/L+ | 470 | | | | | | | | CONFORM - MCDONALD Cr Br - EB |
| 114.58 | | R+ | 139 | | | | 14.1 | 0.09 | 7.5 | 0.03 | IDLEWOOD Ln |
| 114.80 | | R+/L+ | 194 | | | | 19.7 | 0.13 | 10.5 | 0.05 | MEADOW RANCH Rd |
| 116.87 | | R+ | 139 | | | | 14.1 | 0.09 | 7.5 | 0.03 | OLD STAGE Rd |
| 117.37 | | L+ | 125 | | | | 12.7 | 0.08 | 6.8 | 0.03 | BEACH ACCESS Rd |
| 118.43 | 118.45 | R+/L+ | 540 | | | | | | | | CONFORM |
| 118.45 | 118.80 | R+/L+ | 11,090 | | | | | | | | COLD PLANE 0.25′ |
| 118.80 | 118.82 | R+/L+ | 510 | | | | | | | | CONFORM |
| 119.01 | | L+ | 153 | | | | 15.5 | 0.10 | 8.3 | 0.04 | BEACH ACCESS Rd |
| 119.19 | | L+ | 194 | | | | 19.7 | 0.13 | 10.5 | 0.05 | REDWOOD Cr BEACH ACCESS |
| 119.95 | | L+ | 153 | | | | 15.5 | 0.10 | 8.3 | 0.04 | REFUSE DISPOSAL SITE Rd |
| 119.99 | | R+ | 111 | | | | 11.3 | 0.07 | 6.0 | 0.03 | OLD STAGE Rd |
| 120.00 | 120.02 | R+/L+ | 620 | | | | | | | | CONFORM - REDWOOD Cr OVERFLOW - BB |
| 120.03 | 120.05 | R+/L+ | 620 | | | | | | | | CONFORM - REDWOOD Cr OVERFLOW - EB |
| 120.11 | | R+ | 69 | | | | 7.0 | 0.05 | 3.8 | 0.02 | HILTONS Rd |
| 120.11 | | L+ | 125 | | | | 12.4 | 0.08 | 6.6 | 0.03 | FOSTER Ln |
| 120.78 | 120.80 | R+/L+ | 670 | | | | | | | | CONFORM |
| 120.80 | 121.07 | R+/L+ | 9,640 | | | | | | | | COLD PLANE 0.15′ SHOULDERS IN ORICK |
| 121.07 | 121.09 | R+/L+ | 420 | | | | | | | | CONFORM - REDWOOD Cr Br - BB |
| 121.16 | 121.18 | R+/L+ | 480 | | | | | | | | CONFORM - REDWOOD Cr Br - EB |
| 121.18 | 121.70 | R+/L+ | 18,440 | | | | | | | | COLD PLANE 0.15′ |
| 121.70 | 121.72 | R+/L+ | 500 | | | | | | | | CONFORM |
| 122.25 | | R+ | 117 | | | | 11.8 | 0.08 | 6.3 | 0.03 | BALD HILLS Rd |
| 122.68 | | L+ | 133 | | | | 13.5 | 0.09 | 7.2 | 0.03 | ROBINSON Rd |
| 122.84 | 122.86 | R+/L+ | 480 | | | | | | | | CONFORM - PRAIRIE Cr Br - BB |
| 122.88 | 122.90 | R+/L+ | 520 | | | | | | | | CONFORM - PRAIRIE Cr Br - EB |
| 122.89 | | R+ | 103 | | | | 10.4 | 0.07 | 5.6 | 0.03 | PRAIRIE Cr CAMP Rd |
| 123.82 | | L+ | 264 | | | | 26.7 | 0.18 | 14.3 | 0.07 | DAVIDSON Rd |
| 124.42 | | R+ | 117 | | | | 11.8 | 0.08 | 6.3 | 0.03 | ROAD TO SIMPSON LOGGING SCALE |
| 124.60 | | L+ | 106 | | | | 10.7 | 0.07 | 5.7 | 0.03 | PRIVATE Rd |
| 124.69 | 124.71 | R+/L+ | 460 | | | | | | | | CONFORM - LOST MAN Cr Br - BB |
| 124.73 | 124.75 | R+/L+ | 620 | | | | | | | | CONFORM - LOST MAN Cr Br - EB |
| 124.75 | | R+ | 181 | | | | 18.3 | 0.12 | 9.8 | 0.05 | FISH HATCHERY Rd |
| 125.71 | 125.73 | R+/L+ | 580 | | | | | | | | CONFORM |
| SUBTOTAL FROM THIS SHEET | | | 69,691 | 4040 | 4 | 2090 | 39,659.8 | 261.99 | 22,812.2 | 90.75 | |
| SUBTOTAL FROM SHEET Q-3 | | | | | | | | | | 0.35 | |
| | | TOTAL | 69,691 | 4040 | 4 | 2090 | 39,659.8 | 261.99 | 22,812.2 | 91.10 | |

# SUMMARY OF QUANTITIES

Q-5

REVISED BY | DATE REVISED
ROBERT KING | KELLY B. TIMMONS
CALCULATED-DESIGNED BY | CHECKED BY
FUNCTIONAL SUPERVISOR
KELLY B. TIMMONS

STATE OF CALIFORNIA - DEPARTMENT OF TRANSPORTATION
Caltrans
DESIGN

P:\PROJ\01\41500\drafting\sheets\0113000127pa005.dgn

LAST REVISION 00-00-00 | DATE PLOTTED => 17-AUG-2016 | TIME PLOTTED => 09:25

| Dist | COUNTY | ROUTE | POST MILES TOTAL PROJECT | SHEET No. | TOTAL SHEETS |
|---|---|---|---|---|---|
| 01 | Hum | 101 | 109.5/R125.8 | 36 | 100 |

Robert King 5-5-16
REGISTERED CIVIL ENGINEER DATE

May 23, 2016
PLANS APPROVAL DATE

REGISTERED PROFESSIONAL ENGINEER ROBERT W. KING No. C-58530 Exp. 12-31-16 CIVIL STATE OF CALIFORNIA

THE STATE OF CALIFORNIA OR ITS OFFICERS OR AGENTS SHALL NOT BE RESPONSIBLE FOR THE ACCURACY OR COMPLETENESS OF SCANNED COPIES OF THIS PLAN SHEET.

**NOTE:**
(N) NOT A SEPARATE PAY ITEM. FOR INFORMATION ONLY.

## TEMPORARY EROSION CONTROL

| LOCATION (PM) | | | Temp GRAVEL BAG BERM |
|---|---|---|---|
| Beg | END | Rt/Lt | LF |
| 109.57 | 109.63 | Rt | 317 |
| 110.52 | 110.62 | Rt | 528 |
| 110.58 | | Rt | |
| 112.05 | | Rt | |
| 112.11 | | Rt | |
| 112.13 | 112.25 | Rt | 634 |
| 112.19 | | Rt | |
| 112.54 | R112.69 | Rt | 792 |
| R112.79 | R112.98 | Lt | 1,003 |
| R112.81 | | Lt | |
| R112.82 | | Rt | |
| R112.86 | | Rt | |
| R112.88 | | Lt | |
| R112.96 | | Rt | |
| R112.97 | | Lt | |
| R113.03 | | Rt | |
| R113.09 | | Rt | |
| R113.13 | | Rt | |
| R113.20 | | Rt | |
| R113.24 | | Rt | |
| R113.31 | R113.45 | Rt | 739 |
| R113.66 | R113.70 | Rt | 211 |
| R113.72 | R113.78 | Lt | 317 |
| T114.01 | | Rt | |
| T114.45 | 114.51 | Rt | 317 |
| 115.65 | 115.83 | Rt | 950 |
| 115.81 | | Rt | |
| 115.83 | 115.91 | Rt | 422 |
| 115.97 | 115.99 | Rt | 106 |
| 116.02 | 116.14 | Rt | 634 |
| 116.02 | | Rt | |
| 116.17 | | Rt | |
| 116.30 | 116.45 | Rt | 792 |
| 116.34 | | Rt | |
| 116.52 | 116.68 | Lt | 845 |
| 116.52 | | Lt | |
| 116.59 | | Lt | |
| 116.64 | | Lt | |
| 116.68 | | Rt | |
| 116.80 | | Rt | |
| 116.97 | 117.24 | Rt | 1,426 |
| 117.30 | 117.45 | Rt | 792 |
| 117.30 | | Rt | |
| 117.32 | 117.35 | Lt | 158 |
| 117.55 | | Lt | |
| 117.70 | | Lt | |
| 117.82 | 117.89 | Rt | 370 |
| 121.17 | 121.22 | Rt | 264 |
| 121.23 | | Rt | |
| 123.10 | | Rt | |
| 124.56 | 124.63 | Rt | 370 |
| | | TOTAL | 11,987 |

## DELINEATOR

| LOCATION | Lt/Rt | DELINEATOR (CLASS 1) |
|---|---|---|
| PM | | EA |
| 120.78 | Rt | 1 |
| 120.80 | Rt | 1 |
| 120.81 | Rt | 1 |
| 120.83 | Rt | 1 |
| 122.19 | Rt | 1 |
| 122.20 | Rt | 1 |
| 122.21 | Rt | 1 |
| 122.22 | Rt | 1 |
| 122.23 | Rt | 1 |
| 122.24 | Rt | 1 |
| TOTAL | | 10 |

## ESA FENCE

| LOCATION (PM) | | Lt/Rt | TEMPORARY FENCE (TYPE ESA) | COMMENTS |
|---|---|---|---|---|
| FROM | TO | | LF | |
| 118.45 | 118.80 | Rt | 1848 | PLACEMENT TO BE DETERMINED BY ENGINEER |
| | | TOTAL | 1848 | |

## METHYL METHACRYLATE COLORED RESINS

| LOCATION PM | | Rt/Lt | LENGTH (N) | ASPHALT COLOR COATING | COMMENTS |
|---|---|---|---|---|---|
| Beg | END | | LF | SQFT | |
| 120.91 | 121.04 | Rt | 686 | 3,432 | SOLID |
| 120.95 | 120.99 | Lt | 211 | 1,056 | SOLID |
| 120.99 | 121.00 | Lt | 53 | 38 | DASH |
| 121.00 | 121.05 | Lt | 264 | 1,320 | SOLID |
| 121.04 | 121.05 | Rt | 53 | 38 | DASH |
| 121.05 | 121.06 | Lt | 53 | 38 | DASH |
| 121.05 | 121.09 | Rt | 211 | 1,056 | SOLID |
| 121.06 | 121.09 | Lt | 158 | 792 | SOLID |
| 121.16 | 121.19 | Lt | 158 | 792 | SOLID |
| 121.16 | 121.21 | Rt | 264 | 1,320 | SOLID |
| 121.19 | 121.27 | Lt | 422 | 301 | DASH |
| 121.27 | 121.32 | Lt | 264 | 1,320 | SOLID |
| 121.21 | 121.25 | Rt | 211 | 151 | DASH |
| 121.25 | 121.29 | Rt | 211 | 1,056 | SOLID |
| | | | TOTAL | 12,710 | |

# SUMMARY OF QUANTITIES

Q-6

REVISED BY | DATE REVISED
ROBERT KING | KELLY B. TIMMONS
CALCULATED-DESIGNED BY | CHECKED BY
FUNCTIONAL SUPERVISOR
KELLY B. TIMMONS

STATE OF CALIFORNIA - DEPARTMENT OF TRANSPORTATION
Caltrans DESIGN

P:\PROJ\01\41500\drafting\sheets\0113000127pa006.dgn

LAST REVISION 00-00-00 | DATE PLOTTED => 17-AUG-2016 | TIME PLOTTED => 09:25

| Dist | COUNTY | ROUTE | POST MILES TOTAL PROJECT | SHEET No. | TOTAL SHEETS |
|---|---|---|---|---|---|
| 01 | Hum | 101 | 109.5/R125.8 | 37 | 100 |

Robert King 5-5-16
REGISTERED CIVIL ENGINEER DATE

May 23, 2016
PLANS APPROVAL DATE

REGISTERED PROFESSIONAL ENGINEER ROBERT W. KING No. C-58530 Exp. 12-31-16 CIVIL STATE OF CALIFORNIA

*THE STATE OF CALIFORNIA OR ITS OFFICERS OR AGENTS SHALL NOT BE RESPONSIBLE FOR THE ACCURACY OR COMPLETENESS OF SCANNED COPIES OF THIS PLAN SHEET.*

**NOTE:**
(N) NOT A SEPARATE PAY ITEM. FOR INFORMATION ONLY.

## TAPERED EDGE

| LOCATION PM | | | TAPERED EDGE TOTAL THICKNESS (N) | LENGTH TAPERED EDGE (N) | BWC-G (N) | RHMA-G (N) |
|---|---|---|---|---|---|---|
| FROM | TO | L+/R+ | FT | LF | TON | TON |
| 110.47 | 111.30 | L+ | 0.25 | 4382 | 2.4 | 19.0 |
| 110.47 | 110.52 | R+ | 0.25 | 264 | 0.1 | 1.1 |
| 110.62 | 111.30 | R+ | 0.25 | 3590 | 2.0 | 15.6 |
| 111.70 | 111.76 | L+ | 0.25 | 317 | 0.2 | 1.4 |
| 111.70 | 112.13 | R+ | 0.25 | 2270 | 1.3 | 9.8 |
| 111.98 | 112.62 | L+ | 0.25 | 3379 | 1.9 | 14.6 |
| 112.63 | 112.79 | L+ | 0.25 | 845 | 0.5 | 3.7 |
| 112.25 | 112.53 | R+ | 0.25 | 1478 | 0.8 | 6.4 |
| 112.69 | 113.31 | R+ | 0.25 | 3274 | 1.8 | 14.2 |
| 112.98 | 113.50 | L+ | 0.25 | 2746 | 1.5 | 11.9 |
| 113.45 | 113.66 | R+ | 0.25 | 1109 | 0.6 | 4.8 |
| 113.61 | 113.72 | L+ | 0.25 | 581 | 0.3 | 2.5 |
| 113.70 | 114.26 | R+ | 0.25 | 2957 | 1.6 | 12.8 |
| 113.78 | 113.91 | L+ | 0.25 | 686 | 0.4 | 3.0 |
| 113.94 | 114.06 | L+ | 0.25 | 634 | 0.4 | 2.7 |
| 114.46 | 114.52 | L+ | 0.25 | 317 | 0.2 | 1.4 |
| 114.46 | 114.54 | R+ | 0.25 | 422 | 0.2 | 1.8 |
| 114.54 | 114.57 | R+ | 0.25 | 158 | 0.1 | 0.7 |
| 114.54 | 114.69 | L+ | 0.25 | 792 | 0.4 | 3.4 |
| 114.56 | 114.58 | R+ | 0.25 | 106 | 0.1 | 0.5 |
| 114.59 | 114.70 | R+ | 0.25 | 581 | 0.3 | 2.5 |
| 114.72 | 115.22 | L+ | 0.25 | 2640 | 1.5 | 11.4 |
| 115.23 | 115.24 | L+ | 0.25 | 53 | 0.0 | 0.2 |
| 115.25 | 115.28 | L+ | 0.25 | 158 | 0.1 | 0.7 |
| 115.29 | 115.32 | L+ | 0.25 | 158 | 0.1 | 0.7 |
| 115.33 | 115.51 | L+ | 0.25 | 950 | 0.5 | 4.1 |
| 114.73 | 114.80 | R+ | 0.25 | 370 | 0.2 | 1.6 |
| 114.81 | 115.56 | R+ | 0.25 | 3960 | 2.2 | 17.2 |
| 115.55 | 116.34 | L+ | 0.25 | 4171 | 2.3 | 18.1 |
| 115.91 | 115.97 | R+ | 0.25 | 317 | 0.2 | 1.4 |
| 115.99 | 116.02 | R+ | 0.25 | 158 | 0.1 | 0.7 |
| 116.14 | 116.30 | R+ | 0.25 | 845 | 0.5 | 3.7 |
| 116.41 | 116.52 | L+ | 0.25 | 581 | 0.3 | 2.5 |
| 116.45 | 116.87 | R+ | 0.25 | 2218 | 1.2 | 9.6 |
| 116.88 | 116.97 | R+ | 0.25 | 475 | 0.3 | 2.1 |
| 116.68 | 117.32 | L+ | 0.25 | 3379 | 1.9 | 14.6 |
| 117.24 | 117.30 | R+ | 0.25 | 317 | 0.2 | 1.4 |
| 117.35 | 117.36 | L+ | 0.25 | 53 | 0.0 | 0.2 |
| 117.37 | 118.45 | L+ | 0.25 | 5702 | 3.2 | 24.7 |
| 118.80 | 119.00 | L+ | 0.25 | 1056 | 0.6 | 4.6 |
| 119.01 | 119.19 | L+ | 0.25 | 950 | 0.5 | 4.1 |
| 119.20 | 119.94 | L+ | 0.25 | 3907 | 2.2 | 16.9 |
| 119.96 | 120.00 | L+ | 0.25 | 211 | 0.1 | 0.9 |
| 117.46 | 117.82 | R+ | 0.25 | 1901 | 1.1 | 8.2 |
| 117.89 | 117.99 | R+ | 0.25 | 528 | 0.3 | 2.3 |
| 118.00 | 118.45 | R+ | 0.25 | 2376 | 1.3 | 10.3 |
| 118.80 | 119.08 | R+ | 0.25 | 1478 | 0.8 | 6.4 |
| 119.09 | 119.67 | R+ | 0.25 | 3062 | 1.7 | 13.3 |
| 119.68 | 119.98 | R+ | 0.25 | 1584 | 0.9 | 6.9 |
| 119.99 | 120.00 | R+ | 0.25 | 53 | 0.0 | 0.2 |
| 120.03 | 120.10 | R+ | 0.25 | 370 | 0.2 | 1.6 |
| 120.11 | 120.38 | R+ | 0.25 | 1426 | 0.8 | 6.2 |
| 120.03 | 120.10 | L+ | 0.25 | 370 | 0.2 | 1.6 |
| 120.11 | 120.18 | L+ | 0.25 | 370 | 0.2 | 1.6 |
| 120.19 | 120.20 | L+ | 0.25 | 53 | 0.0 | 0.2 |
| 120.21 | 120.27 | L+ | 0.25 | 317 | 0.2 | 1.4 |
| 120.35 | 120.36 | L+ | 0.25 | 53 | 0.0 | 0.2 |
| | | | | SUBTOTAL | 43.0 | 335.6 |

## TAPERED EDGE (CONTINUED)

| LOCATION PM | | | TAPERED EDGE TOTAL THICKNESS (N) | TAPERED EDGE LENGTH (N) | BWC-G (N) | RHMA-G (N) |
|---|---|---|---|---|---|---|
| FROM | TO | L+/R+ | FT | LF | TON | TON |
| 120.37 | 120.38 | L+ | 0.25 | 53 | 0.0 | 0.2 |
| 120.39 | 120.40 | L+ | 0.25 | 53 | 0.0 | 0.2 |
| 120.41 | 120.47 | L+ | 0.25 | 317 | 0.2 | 1.4 |
| 120.41 | 120.56 | R+ | 0.25 | 792 | 0.4 | 3.4 |
| 120.48 | 120.63 | L+ | 0.25 | 792 | 0.4 | 3.4 |
| 120.57 | 120.61 | R+ | 0.25 | 211 | 0.1 | 0.9 |
| 120.63 | 120.68 | R+ | 0.25 | 264 | 0.1 | 1.1 |
| 120.64 | 120.65 | L+ | 0.25 | 53 | 0.0 | 0.2 |
| 120.66 | 120.76 | L+ | 0.25 | 528 | 0.3 | 2.3 |
| 120.69 | 120.72 | R+ | 0.25 | 158 | 0.1 | 0.7 |
| 120.73 | 120.76 | R+ | 0.25 | 158 | 0.1 | 0.7 |
| 120.77 | 120.80 | R+ | 0.25 | 158 | 0.1 | 0.7 |
| 120.77 | 120.79 | L+ | 0.25 | 106 | 0.1 | 0.5 |
| 120.79 | 120.80 | L+ | 0.25 | 53 | 0.0 | 0.2 |
| 121.70 | 121.72 | L+ | 0.25 | 106 | 0.1 | 0.5 |
| 121.74 | 122.03 | L+ | 0.25 | 1531 | 0.8 | 6.6 |
| 122.04 | 122.67 | L+ | 0.25 | 3326 | 1.8 | 14.4 |
| 122.68 | 122.85 | L+ | 0.25 | 898 | 0.5 | 3.9 |
| 121.70 | 121.95 | R+ | 0.25 | 1320 | 0.7 | 5.7 |
| 122.61 | 122.84 | R+ | 0.25 | 1214 | 0.7 | 5.3 |
| 122.90 | 123.44 | R+ | 0.25 | 2851 | 1.6 | 12.3 |
| 122.90 | 123.54 | L+ | 0.25 | 3379 | 1.9 | 14.6 |
| 123.55 | 123.81 | L+ | 0.25 | 1373 | 0.8 | 5.9 |
| 123.45 | 123.50 | R+ | 0.25 | 264 | 0.1 | 1.1 |
| 123.53 | 123.54 | R+ | 0.25 | 53 | 0.0 | 0.2 |
| 123.56 | 124.00 | R+ | 0.25 | 2350 | 1.3 | 10.2 |
| 123.83 | 123.99 | L+ | 0.25 | 845 | 0.5 | 3.7 |
| 124.00 | 124.06 | L+ | 0.25 | 317 | 0.2 | 1.4 |
| 124.01 | 124.05 | R+ | 0.25 | 211 | 0.1 | 0.9 |
| 124.06 | 124.42 | R+ | 0.25 | 1901 | 1.1 | 8.2 |
| 124.07 | 124.38 | L+ | 0.25 | 1637 | 0.9 | 7.1 |
| 124.39 | 124.42 | L+ | 0.25 | 158 | 0.1 | 0.7 |
| 124.43 | 124.48 | R+ | 0.25 | 264 | 0.1 | 1.1 |
| 124.44 | 124.48 | L+ | 0.25 | 211 | 0.1 | 0.9 |
| 124.50 | 124.60 | L+ | 0.25 | 528 | 0.3 | 2.3 |
| 124.61 | 124.70 | L+ | 0.25 | 475 | 0.3 | 2.1 |
| 124.50 | 124.56 | R+ | 0.25 | 317 | 0.2 | 1.4 |
| 124.63 | 124.70 | R+ | 0.25 | 370 | 0.2 | 1.6 |
| 124.76 | 124.78 | L+ | 0.25 | 106 | 0.1 | 0.5 |
| 124.76 | 125.73 | R+ | 0.25 | 5122 | 2.8 | 22.2 |
| 124.79 | 124.83 | L+ | 0.25 | 211 | 0.1 | 0.9 |
| 124.93 | 125.28 | L+ | 0.25 | 1848 | 1.0 | 8.0 |
| 124.47 | 125.72 | L+ | 0.25 | 6600 | 3.6 | 28.6 |
| | | | | SUBTOTAL THIS TABLE | 23.9 | 188.2 |
| | | | | SUBTOTAL PREVIOUS TABLE | 43.0 | 335.6 |
| | | | | TOTAL | 66.9 | 523.8 |

# SUMMARY OF QUANTITIES

Q-7

REVISED BY | DATE REVISED
ROBERT KING | KELLY B. TIMMONS
CALCULATED-DESIGNED BY | CHECKED BY
FUNCTIONAL SUPERVISOR: KELLY B. TIMMONS
STATE OF CALIFORNIA - DEPARTMENT OF TRANSPORTATION
Caltrans DESIGN
P:\PROJ\01\41500\drafting\sheets\0113000127pa007.dgn

LAST REVISION 00-00-00 | DATE PLOTTED => 17-AUG-2016 | TIME PLOTTED => 09:25

| Dist | COUNTY | ROUTE | POST MILES TOTAL PROJECT | SHEET No. | TOTAL SHEETS |
|---|---|---|---|---|---|
| 01 | Hum | 101 | 109.5/R125.8 | 38 | 100 |

Brian T. Finck 05-23-16
REGISTERED ELECT ENGINEER DATE

May 23, 2016
PLANS APPROVAL DATE

REGISTERED PROFESSIONAL ENGINEER BRIAN T. FINCK No. 17756 Exp. 6-30-16 ELECT STATE OF CALIFORNIA

*THE STATE OF CALIFORNIA OR ITS OFFICERS OR AGENTS SHALL NOT BE RESPONSIBLE FOR THE ACCURACY OR COMPLETENESS OF SCANNED COPIES OF THIS PLAN SHEET.*

**NOTES:**

1. FOR COMPLETE R/W AND ACCURATE DATA SEE RIGHT OF WAY RECORD MAPS AT DISTRICT OFFICE.
2. CONFIRM WITH UTILITY COMPANY TO INSTALL CONDUIT AND PRIOR TO BACK FILLING THE TRENCH.
3. SEE SHEET E-3 FOR ADDITIONAL DETAILS.

**LEGEND:**

[1] INSTALL AND INTEGRATE SPEED RADAR DISPLAY UNIT PER MANUFACTURERS REQUIREMENTS INTO THE NEW R2-1.

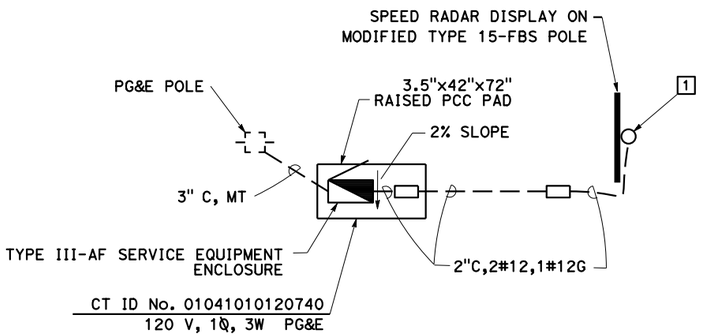


**DETAIL A**

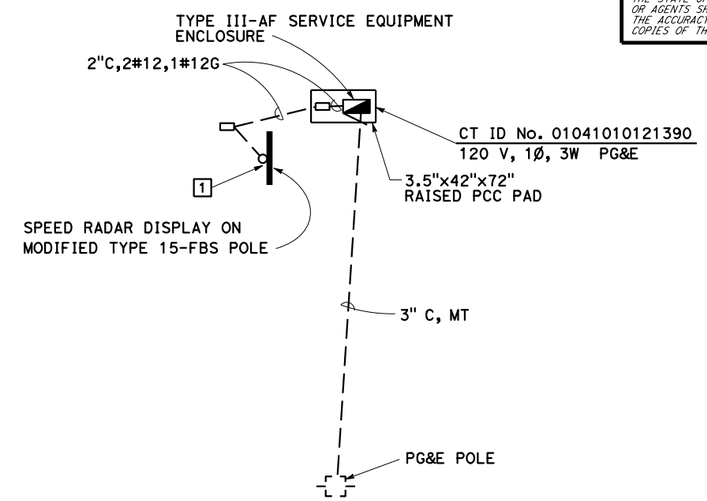


**DETAIL B**

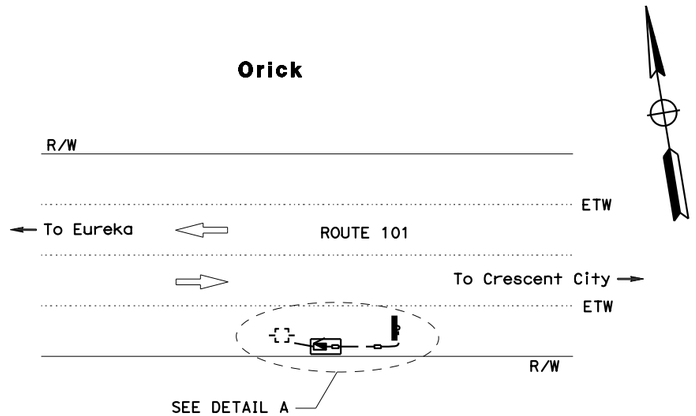


**LOCATION 1**
**PM 120.74 Rt**

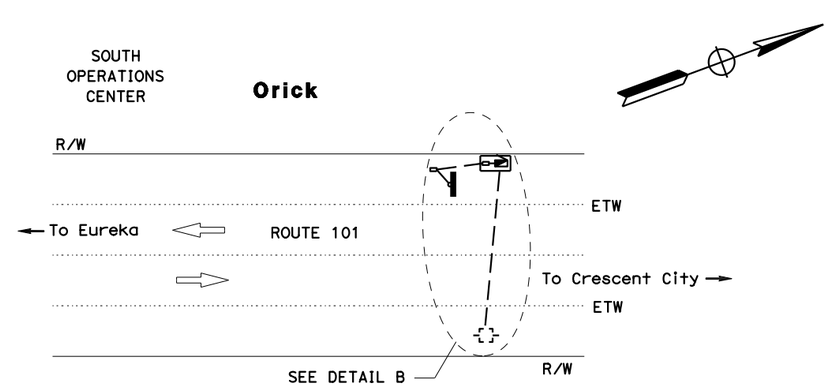


**LOCATION 2**
**PM 121.39 Lt**

# RADAR SPEED FEEDBACK SIGN SYSTEM

NO SCALE

E-1

*THIS PLAN IS ACCURATE FOR ELECTRICAL WORK ONLY*

| REVISED BY | DATE REVISED |
|---|---|
| | |

| CALCULATED-DESIGNED BY | CHECKED BY |
|---|---|
| BRIAN FINCK | WILLIAM BARTLEY |

FUNCTIONAL SUPERVISOR: JOHN CARSON

STATE OF CALIFORNIA - DEPARTMENT OF TRANSPORTATION
Caltrans
ELECTRICAL

P:\PROJ\01\41500\drafting\sheets\0113000127ua001.dgn

LAST REVISION 00-00-00 | DATE PLOTTED => 17-AUG-2016 | TIME PLOTTED => 09:25

| Dist | COUNTY | ROUTE | POST MILES TOTAL PROJECT | SHEET No. | TOTAL SHEETS |
|---|---|---|---|---|---|
| 01 | Hum | 101 | 109.5/R125.8 | 39 | 100 |

Brian T. Finck 05-23-16
REGISTERED ELECT ENGINEER DATE

May 23, 2016
PLANS APPROVAL DATE

REGISTERED PROFESSIONAL ENGINEER BRIAN T. FINCK No. 17756 Exp. 6-30-16 ELECT STATE OF CALIFORNIA

*THE STATE OF CALIFORNIA OR ITS OFFICERS OR AGENTS SHALL NOT BE RESPONSIBLE FOR THE ACCURACY OR COMPLETENESS OF SCANNED COPIES OF THIS PLAN SHEET.*

**NOTE:**

FOR COMPLETE R/W AND ACCURATE DATA SEE RIGHT OF WAY RECORD MAPS AT DISTRICT OFFICE.

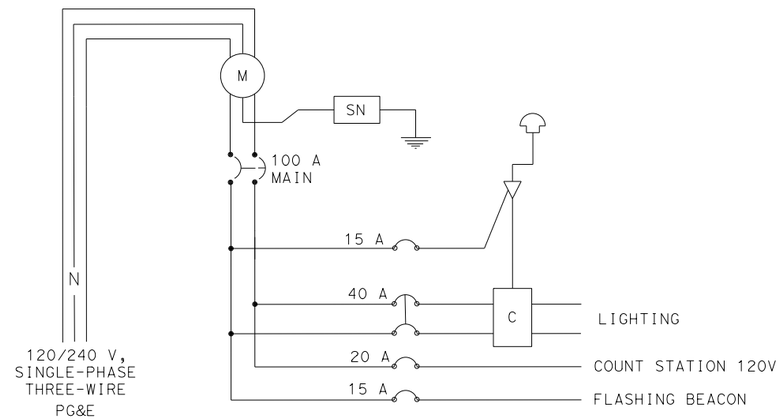


## EXISTING SERVICE WIRING DIAGRAM (METERED)

**CTID No. 01041010012570**

**LEGEND**

- (M) METER SOCKET
- [C] CONTACTOR (LIGHTING)
- [SN] SOLID NEUTRAL BUS
- ▽ AUTO-TEST SWITCH
- ⌂ PHOTOELECTRIC UNIT (PEU)

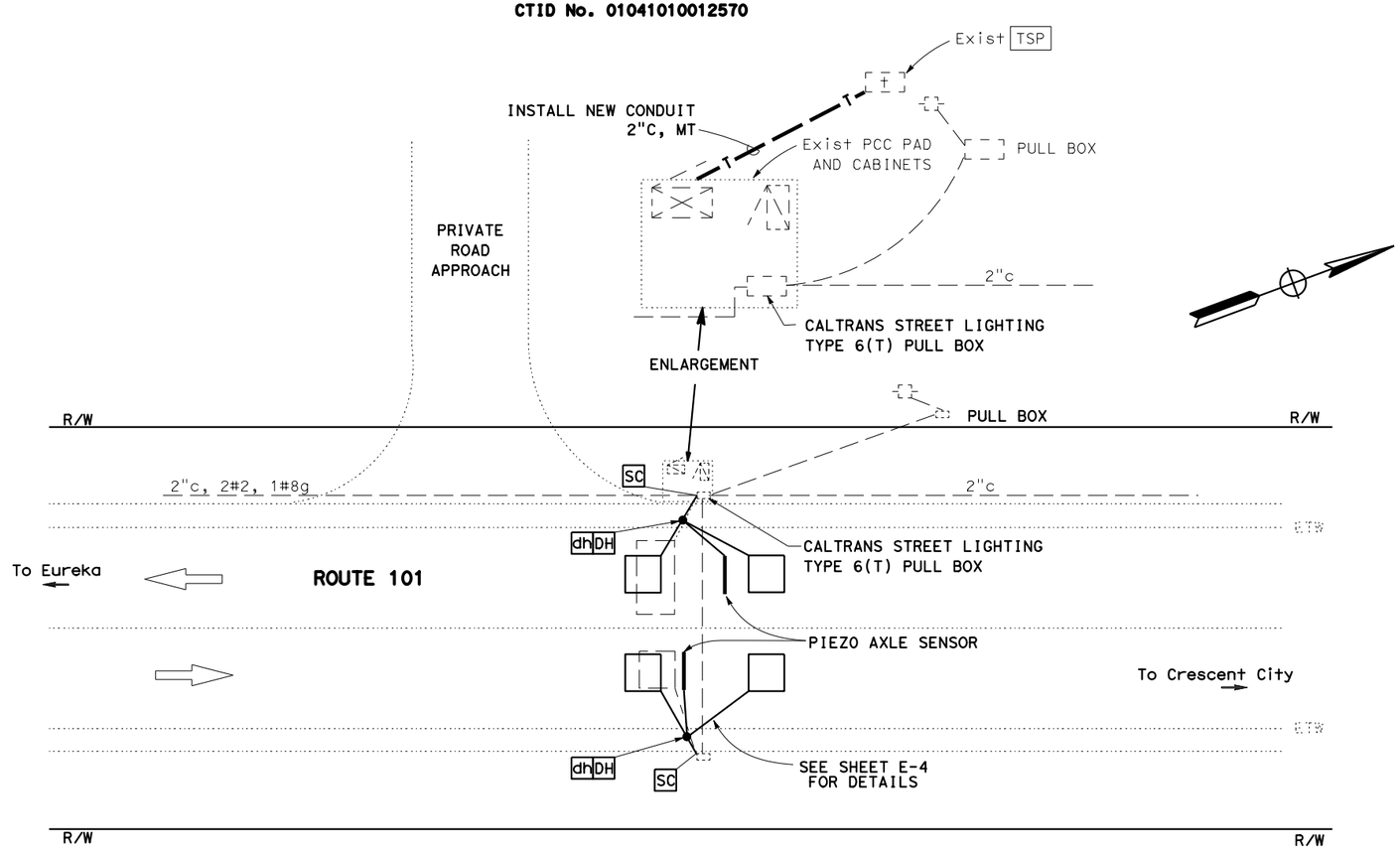


**PM 125.72**

## MODIFY TRAFFIC MONITORING STATION

**NO SCALE**

***THIS PLAN IS ACCURATE FOR ELECTRICAL WORK ONLY***

**E-2**

| REVISED BY | DATE REVISED |
|---|---|
| | |

| CALCULATED-DESIGNED BY | BRIAN FINCK |
|---|---|
| CHECKED BY | WILLIAM BARTLEY |
| FUNCTIONAL SUPERVISOR | JOHN CARSON |

STATE OF CALIFORNIA - DEPARTMENT OF TRANSPORTATION
Caltrans
ELECTRICAL

P:\PROJ\01\41500\drafting\sheets\0113000127ua002.dgn

LAST REVISION 00-00-00 | DATE PLOTTED => 17-AUG-2016 | TIME PLOTTED => 09:25

| Dist | COUNTY | ROUTE | POST MILES TOTAL PROJECT | SHEET No. | TOTAL SHEETS |
|---|---|---|---|---|---|
| 01 | Hum | 101 | 109.5/R125.8 | 40 | 100 |

Brian T. Finck 05-23-16
REGISTERED ELECT ENGINEER DATE

May 23, 2016
PLANS APPROVAL DATE

REGISTERED PROFESSIONAL ENGINEER BRIAN T. FINCK No. 17756 Exp. 6-30-16 ELECT STATE OF CALIFORNIA

*THE STATE OF CALIFORNIA OR ITS OFFICERS OR AGENTS SHALL NOT BE RESPONSIBLE FOR THE ACCURACY OR COMPLETENESS OF SCANNED COPIES OF THIS PLAN SHEET.*

## LEGEND

- (M) METER SOCKET
- [C] CONTACTOR (LIGHTING)
- [SN] SOLID NEUTRAL BUS
- ▽ AUTO TEST SWITCH
- ⌓ PHOTOELECTRIC UNIT TYPE V

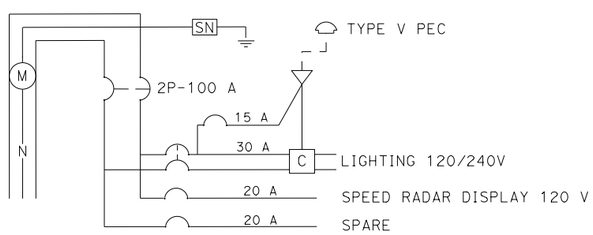


### EXISTING SERVICE WIRING DIAGRAM

TYPE III-AF SERVICE ENCLOSURE
120/240 V SERVICE No.
LOCATION 1 CALTRANS ID 01041010120740
LOCATION 2 CALTRANS ID 01041010121390

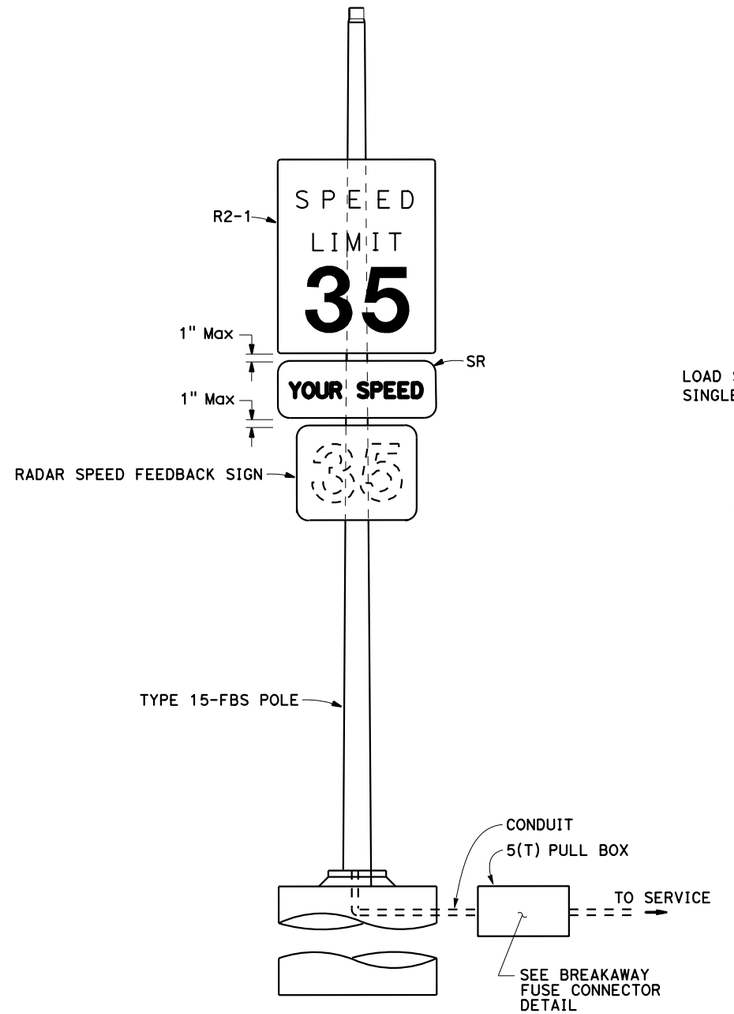


### RADAR SPEED FEEDBACK SIGN ON TYPE 15-FBS

"SR20W1" 104+00 SIGN NUMBER (1)
"SR20E1" 4+50 SIGN NUMBER (43)

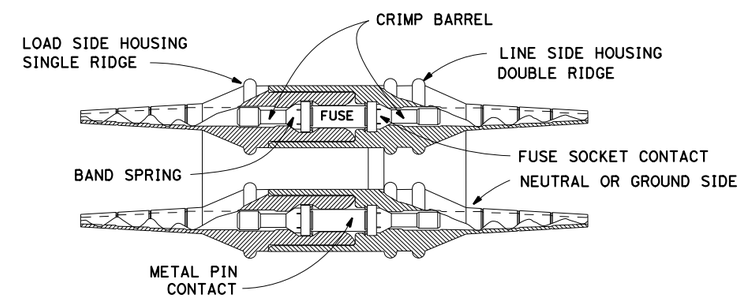


### BREAKAWAY FUSE CONNECTOR

*THIS PLAN IS ACCURATE FOR ELECTRICAL WORK ONLY*

## ELECTRICAL DETAILS

NO SCALE

E-3

REVISED BY | DATE REVISED
BRIAN FINCK | WILLIAM BARTLEY
CALCULATED-DESIGNED BY | CHECKED BY
FUNCTIONAL SUPERVISOR: JOHN CARSON
STATE OF CALIFORNIA - DEPARTMENT OF TRANSPORTATION
Caltrans
ELECTRICAL

P:\PROJ\01\41500\drafting\sheets\0113000127ua003.dgn

LAST REVISION 00-00-00 | DATE PLOTTED => 17-AUG-2016 | TIME PLOTTED => 09:25

| Dist | COUNTY | ROUTE | POST MILES TOTAL PROJECT | SHEET No. | TOTAL SHEETS |
|---|---|---|---|---|---|
| 01 | Hum | 101 | 109.5/R125.8 | 41 | 100 |

Brian T. Finck 05-23-16
REGISTERED ELECT ENGINEER DATE

May 23, 2016
PLANS APPROVAL DATE

REGISTERED PROFESSIONAL ENGINEER BRIAN T. FINCK No. 17756 Exp. 6-30-16 ELECT STATE OF CALIFORNIA

*THE STATE OF CALIFORNIA OR ITS OFFICERS OR AGENTS SHALL NOT BE RESPONSIBLE FOR THE ACCURACY OR COMPLETENESS OF SCANNED COPIES OF THIS PLAN SHEET.*

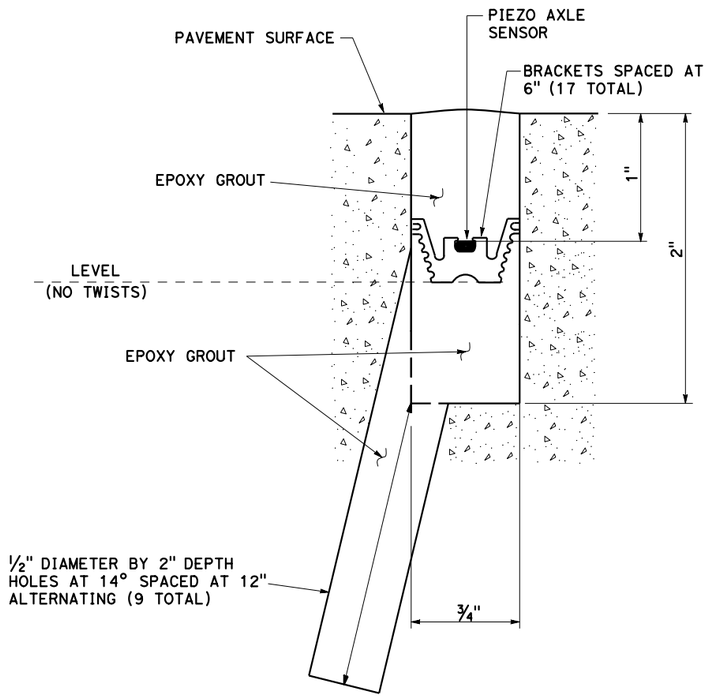


SECTION A-A

DIRECTION OF TRAFFIC
N - NORTHBOUND , S - SOUTHBOUND
E - EASTBOUND , W - WESTBOUND

N-1-2

1 - ENTERING
2 - LEAVING

LANE NUMBER
1 - FIRST LANE FROM LEFT
2 - SECOND LANE

INDUCTIVE LOOP DETECTOR SENSOR DESIGNATION

DIRECTION OF TRAFFIC
N - NORTHBOUND, S - SOUTHBOUND
E - EASTBOUND, W - WESTBOUND

PIEZO AXLE SENSOR

N-P-1-1

1 - FOR ALL PIEZO AXLE SENSORS

LANE NUMBER
1 - FIRST LANE FROM LEFT
2 - SECOND LANE

PIEZO AXLE SENSOR DESIGNATION

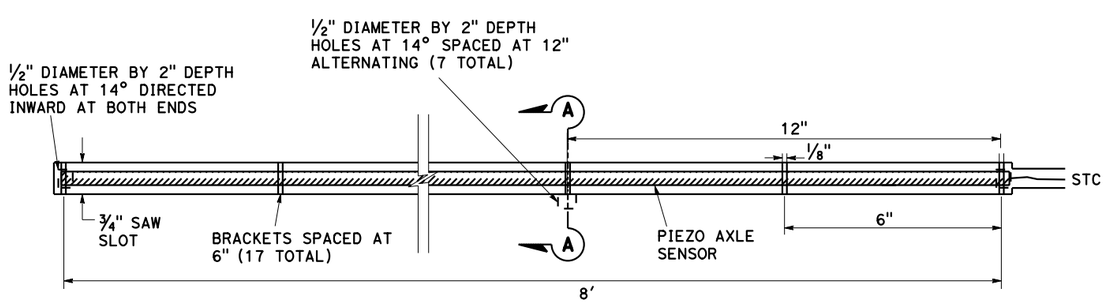


PIEZO AXLE SENSOR INSTALLATION

TOP VIEW
DETAIL A

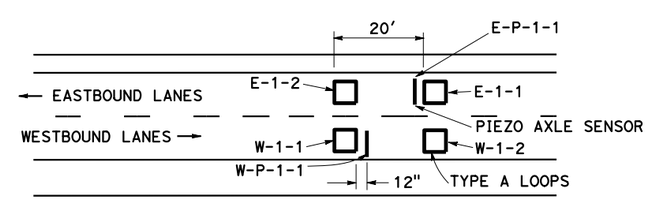


DETAIL B

LOOP DETECTOR AND PIEZO AXLE SENSOR PLACEMENT AND DESIGNATION

ELECTRICAL DETAILS
NO SCALE

E-4

*THIS PLAN IS ACCURATE FOR ELECTRICAL WORK ONLY*

| REVISED BY | DATE REVISED |
|---|---|
| | |

| CALCULATED-DESIGNED BY | CHECKED BY |
|---|---|
| BRIAN FINCK | WILLIAM BARTLEY |

FUNCTIONAL SUPERVISOR: JOHN CARSON

STATE OF CALIFORNIA - DEPARTMENT OF TRANSPORTATION
Caltrans
ELECTRICAL

P:\PROJ\01\41500\drafting\sheets\0113000127ua004.dgn

LAST REVISION 00-00-00 | DATE PLOTTED => 17-AUG-2016 | TIME PLOTTED => 09:25

| Dist | COUNTY | ROUTE | POST MILES TOTAL PROJECT | SHEET No. | TOTAL SHEETS |
|---|---|---|---|---|---|
| 01 | Hum | 101 | 109.5/R125.8 | 42 | 100 |

Brian T. Finck 05-23-16
REGISTERED ELECT ENGINEER DATE

May 23, 2016
PLANS APPROVAL DATE

REGISTERED PROFESSIONAL ENGINEER BRIAN T. FINCK No. 17756 Exp. 6-30-16 ELECT STATE OF CALIFORNIA

*THE STATE OF CALIFORNIA OR ITS OFFICERS OR AGENTS SHALL NOT BE RESPONSIBLE FOR THE ACCURACY OR COMPLETENESS OF SCANNED COPIES OF THIS PLAN SHEET.*

**NOTE:**

THE QUANTITIES ON THIS SHEET ARE NOT A SEPARATE PAY ITEM AND ARE FOR INFORMATION ONLY.

## RADAR SPEED FEEDBACK SIGN SYSTEM

| SHEET NO. | (N) POLE MODIFIED (TYPE 15-FBS) | (N) PULL BOX | | | (N) CONDUIT TYPE 3 | | (N) WIRE #12 | (N) GND #12 | (N) TYPE III,AF SERVICE EQUIPMENT ENCLOSURE | (N) CONCRETE SERVICE PAD | RADAR SPEED DISPLAY SIGN |
|---|---|---|---|---|---|---|---|---|---|---|---|
| | | #5 | (E) | (T) | 3" MT | 2" | | | | | |
| | EA | EA | | | LF | | LF | LF | EA | CY | EA |
| E-1 | 2 | 4 | 2 | | 100′ | | 600′ | 300′ | 2 | 6 | 2 |

## MODIFY TRAFFIC MONITORING STATION

| SHEET NO. | (N) CONDUIT TYPE 3 | (N) DETECTOR HANDHOLE | (N) TYPE A LOOP | (N) PIAZO AXLE SENSOR |
|---|---|---|---|---|
| | 2" | | | |
| | LF | EA | EA | EA |
| E-2 | 100 | 2 | 4 | 2 |

(N) - NOT A SEPARATE PAY ITEM, FOR INFORMATION ONLY.

# ELECTRICAL QUANTITIES

E-5

REVISED BY | DATE REVISED
BRIAN FINCK | WILLIAM BARTLEY
CALCULATED-DESIGNED BY | CHECKED BY
FUNCTIONAL SUPERVISOR: JOHN CARSON

STATE OF CALIFORNIA - DEPARTMENT OF TRANSPORTATION
Caltrans
ELECTRICAL

P:\PROJ\01\41500\drafting\sheets\0113000127ua005.dgn

LAST REVISION 00-00-00 | DATE PLOTTED => 17-AUG-2016 | TIME PLOTTED => 09:25

## M

| | |
|---|---|
| Maint | MAINTENANCE |
| Max | MAXIMUM |
| MB | METAL BEAM |
| MBB | METAL BEAM BARRIER |
| MBGR | METAL BEAM GUARD RAILING |
| Med | MEDIAN |
| MGS | MIDWEST GUARDRAIL SYSTEM |
| MH | MANHOLE |
| Min | MINIMUM |
| Misc | MISCELLANEOUS |
| Misc I & S | MISCELLANEOUS IRON AND STEEL |
| Mkr | MARKER |
| Mod | MODIFIED, |
| | MODIFY |
| Mon | MONUMENT |
| MP | METAL PLATE |
| MPGR | METAL PLATE GUARD RAILING |
| MR | MOVEMENT RATING |
| MSE | MECHANICALLY STABILIZED EMBANKMENT |
| Mt | MOUNTAIN, MOUNT |
| Mtl | MATERIAL |
| MVP | MAINTENANCE VEHICLE PULLOUT |

## N

| | |
|---|---|
| N | NORTH |
| NB | NORTHBOUND |
| No. | NUMBER (MUST HAVE PERIOD) |
| Nos. | NUMBERS (MUST HAVE PERIOD) |
| NPS | NOMINAL PIPE SIZE |
| NS | NEAR SIDE |
| NSP | NEW STANDARD PLAN |
| NTS | NOT TO SCALE |

## O

| | |
|---|---|
| Oblr | OBLITERATE |
| OC | OVERCROSSING |
| OD | OUTSIDE DIAMETER |
| OF | OUTSIDE FACE |
| OG | ORIGINAL GROUND |
| OGAC | OPEN GRADED ASPHALT CONCRETE |
| OGFC | OPEN GRADED FRICTION COURSE |
| OH | OVERHEAD |
| OHWM | ORDINARY HIGH WATER MARK |
| O-O | OUT TO OUT |
| Opp | OPPOSITE |
| OSD | OVERSIDE DRAIN |

## P

| | |
|---|---|
| p | PAGE |
| PAP | PERFORATED ALUMINUM PIPE |
| PB | PULL BOX |
| PC | POINT OF CURVATURE, |
| | PRECAST |
| PCC | POINT OF COMPOUND CURVE, |
| | PORTLAND CEMENT CONCRETE |
| PCMS | PORTABLE CHANGEABLE MESSAGE SIGN |
| PCP | PERFORATED CONCRETE PIPE, |
| | PRESTRESSED CONCRETE PIPE |
| PCVC | POINT OF COMPOUND VERTICAL CURVE |
| PEC | PERMIT TO ENTER AND CONSTRUC- |
| Ped | PEDESTRIAN |
| Ped OC | PEDESTRIAN OVERCROSSING |
| Ped UC | PEDESTRIAN UNDERCROSSING |
| Perm Mtl | PERMEABLE MATERIAL |

## P continued

| | |
|---|---|
| PG | PROFILE GRADE |
| PI | POINT OF INTERSECTION |
| PJP | PARTIAL JOINT PENETRATION |
| Pkwy | PARKWAY |
| ₱,PL | PLATE |
| P/L | PROPERTY LINE |
| PM | POST MILE, |
| | TIME FROM NOON TO MIDNIGHT |
| PN | PAVING NOTCH |
| POC | POINT OF HORIZONTAL CURVE |
| POT | POINT OF TANGENT |
| POVC | POINT OF VERTICAL CURVE |
| PP | PIPE PILE, |
| | PLASTIC PIPE, |
| | POWER POLE |
| PPL | PREFORMED PERMEABLE LINER |
| PPP | PERFORATED PLASTIC PIPE |
| PRC | POINT OF REVERSE CURVE |
| PRF | PAVEMENT REINFORCING FABRIC |
| PRVC | POINT OF REVERSE VERTICAL CURVE |
| PS&E | PLANS, SPECIFICATIONS AND ESTIMATES |
| PS, P/S | PRESTRESSED |
| PSP | PERFORATED STEEL PIPE |
| PT | POINT OF TANGENCY |
| PVC | POLYVINYL CHLORIDE |
| Pvmt | PAVEMENT |

## Q

| | |
|---|---|
| Qty | QUANTITY |

## R

| | |
|---|---|
| R | RADIUS |
| R & D | REMOVE AND DISPOSE |
| R & S | REMOVE AND SALVAGE |
| R/C | RATE OF CHANGE |
| RCA | REINFORCED CONCRETE ARCH |
| RCB | REINFORCED CONCRETE BOX |
| RCP | REINFORCED CONCRETE PIPE |
| RCPA | REINFORCED CONCRETE PIPE ARCH |
| Rd | ROAD |
| Reinf | REINFORCED, |
| | REINFORCEMENT, |
| | REINFORCING |
| Rel | RELOCATE |
| Repl | REPLACEMENT |
| Ret | RETAINING |
| Rev | REVISED, REVISION |
| Rdwy | ROADWAY |
| RHMA | RUBBERIZED HOT MIX ASPHALT |
| Riv | RIVER |
| RM | ROAD-MIXED |
| RP | RADIUS POINT, |
| | REFERENCE POINT |
| RR | RAILROAD |
| RSP | ROCK SLOPE PROTECTION, |
| | REVISED STANDARD PLAN |
| Rt | RIGHT |
| Rte | ROUTE |
| RW | REDWOOD, |
| | RETAINING WALL |
| R/W | RIGHT OF WAY |
| Rwy | RAILWAY |

## S

| | |
|---|---|
| S | SOUTH, |
| | SUPPLEMENT |
| SAE | STRUCTURE APPROACH EMBANKMENT |
| Salv | SALVAGE |
| SAPP | STRUCTURAL ALUMINUM PLATE PIPE |
| SB | SOUTHBOUND |
| SC | SAND CUSHION |
| SCSP | SLOTTED CORRUGATED STEEL PIPE |
| SD | STORM DRAIN |
| Sec | SECOND, |
| | SECTION |
| Sep | SEPARATION |
| SG | SUBGRADE |
| Shld | SHOULDER |
| Sht | SHEET |
| Sim | SIMILAR |
| ₤ | STATION LINE |
| SM | SELECTED MATERIAL |
| Spec | SPECIAL, |
| | SPECIFICATIONS |
| SPP | SLOTTED PLASTIC PIPE |
| SS | SLOPE STAKE |
| SSBM | STRAP AND SADDLE BRACKET METHOD |
| SSD | STRUCTURAL SECTION DRAIN |
| SSPA | STRUCTURAL STEEL PLATE ARCH |
| SSPP | STRUCTURAL STEEL PLATE PIPE |
| SSPPA | STRUCTURAL STEEL PLATE PIPE ARCH |
| SSRP | STEEL SPIRAL RIB PIPE |
| St | STREET |
| Sta | STATION |
| STBB | SINGLE THRIE BEAM BARRIER |
| Std | STANDARD |
| Str | STRUCTURE |
| Surf | SURFACING |
| SW | SIDEWALK, |
| | SOUND WALL |
| Swr | SEWER |
| Sym | SYMMETRICAL |
| S4S | SURFACE 4 SIDES |

## T

| | |
|---|---|
| T | SEMI-TANGENT |
| Tan | TANGENT |
| TBB | THRIE BEAM BARRIER |
| Tbr | TIMBER |
| TC | TOP OF CURB |
| TCB | TRAFFIC CONTROL BOX |
| TCE | TEMPORARY CONSTRUCTION EASEMENT |
| Tel | TELEPHONE |
| Temp | TEMPORARY |
| TG | TOP OF GRADE |
| Tot | TOTAL |
| TP | TELEPHONE POLE |
| TPB | TREATED PERMEABLE BASE |
| TPM | TREATED PERMEABLE MATERIAL |
| Trans | TRANSITION |

## T continued

| | |
|---|---|
| TS | TRANSVERSE, |
| | TRAFFIC SIGNAL, |
| | TUBULAR STEEL |
| Typ | TYPICAL |

## U

| | |
|---|---|
| UC | UNDERCROSSING |
| UD | UNDERDRAIN |
| UG | UNDERGROUND |
| UON | UNLESS OTHERWISE NOTED |
| UP | UNDERPASS |

## V

| | |
|---|---|
| V | VALVE, |
| | DESIGN SPEED |
| Var | VARIABLE, |
| | VARIES |
| VC | VERTICAL CURVE |
| VCP | VITRIFIED CLAY PIPE |
| Vert | VERTICAL |
| Via | VIADUCT |
| Vol | VOLUME |

## W

| | |
|---|---|
| W | WEST, |
| | WIDTH |
| WB | WESTBOUND |
| WH | WEEP HOLE |
| WM | WIRE MESH |
| WS | WATER SURFACE |
| WSP | WELDED STEEL PIPE |
| Wt | WEIGHT |
| WV | WATER VALVE |
| WW | WINGWALL |
| WWLOL | WINGWALL LAYOUT LINE |

## X

| | |
|---|---|
| X Sec | CROSS SECTION |
| Xing | CROSSING |

## Y

| | |
|---|---|
| Yr | YEAR |
| Yrs | YEARS |

| DIST | COUNTY | ROUTE | POST MILES TOTAL PROJECT | SHEET No. | TOTAL SHEETS |
|---|---|---|---|---|---|
| 01 | Hum | 101 | 109.5/R125.8 | 43 | 100 |

Grace M. Tsushima
REGISTERED CIVIL ENGINEER

July 19, 2013
PLANS APPROVAL DATE

REGISTERED PROFESSIONAL ENGINEER Grace M. Tsushima No. C49814 Exp. 9-30-14 CIVIL STATE OF CALIFORNIA

THE STATE OF CALIFORNIA OR ITS OFFICIALS OR AGENTS SHALL NOT BE RESPONSIBLE FOR THE ACCURACY OR COMPLETENESS OF SCANNED COPIES OF THIS PLAN SHEET.

TO ACCOMPANY PLANS DATED May 23, 2016

### UNIT OF MEASUREMENT SYMBOLS:

Some of the symbols used in the project plan quantity tables and in the Bid Item List are:

TABLE A

| SYMBOL USED | DEFINITIONS |
|---|---|
| ACRE | ACRE |
| CF | CUBIC FOOT |
| CY | CUBIC YARD |
| EA | EACH |
| GAL | GALLON |
| LB | POUND |
| LF | LINEAR FOOT |
| SQFT | SQUARE FOOT |
| SQYD | SQUARE YARD |
| STA | 100 FEET |
| TAB | TABLET |
| TON | 2,000 POUNDS |

Some of the symbols used in the plans other than in the project plan quantity tables are:

TABLE B

| SYMBOL USED | DEFINITIONS |
|---|---|
| ksi | KIPS PER SQUARE INCH |
| ksf | KIPS PER SQUARE FOOT |
| psi | POUNDS PER SQUARE INCH |
| psf | POUNDS PER SQUARE FOOT |
| $lb/ft^3$, pcf | POUNDS PER CUBIC FOOT |
| tsf | TONS PER SQUARE FOOT |
| mph, MPH * | MILES PER HOUR |
| ø | NOMINAL DIAMETER |
| oz | OUNCE |
| lb | POUND |
| kip | 1,000 POUNDS |
| cal | CALORIE |
| ft | FOOT OR FEET |
| gal | GALLON |

* For use on a sign panel only

STATE OF CALIFORNIA
DEPARTMENT OF TRANSPORTATION

# ABBREVIATIONS (SHEET 2 OF 2)

NO SCALE

RSP A10B DATED JULY 19, 2013 SUPERSEDES STANDARD PLAN A10B DATED MAY 20, 2011 - PAGE 2 OF THE STANDARD PLANS BOOK DATED 2010.

**REVISED STANDARD PLAN RSP A10B**

**2010 REVISED STANDARD PLAN RSP A10B**

P:\PROJ\01\41500\drafting\sheets\0113000127va001.dgn

6-7-13

| DIST | COUNTY | ROUTE | POST MILES TOTAL PROJECT | SHEET No. | TOTAL SHEETS |
|---|---|---|---|---|---|
| 01 | Hum | 101 | 109.5/R125.8 | 44 | 100 |

REGISTERED C.V. ENGINEER

July 19, 2013
PLANS APPROVAL DATE

REGISTERED PROFESSIONAL ENGINEER Roberta L. McLaughlin No. C40375 Exp. 3-31-15 CIVIL STATE OF CALIFORNIA

*THE STATE OF CALIFORNIA OR ITS OFFICERS OR AGENTS SHALL NOT BE RESPONSIBLE FOR THE ACCURACY OR COMPLETENESS OF SCANNED COPIES OF THIS PLAN SHEET.*

TO ACCOMPANY PLANS DATED May 23, 2016

## EXIT RAMP NEUTRAL AREA (GORE) TREATMENT

DETAIL 36

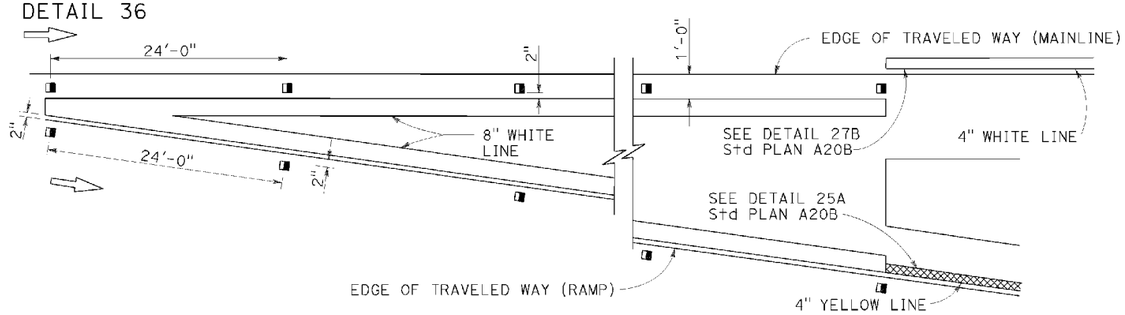


## ENTRANCE RAMP NEUTRAL AREA (MERGE) TREATMENT

DETAIL 36A

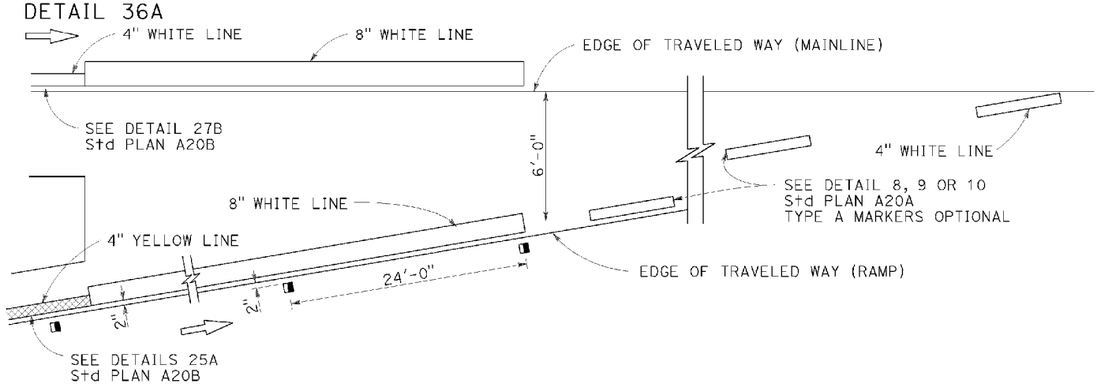


## ENTRANCE RAMP NEUTRAL AREA (ACCELERATION LANE) TREATMENT

DETAIL 36B

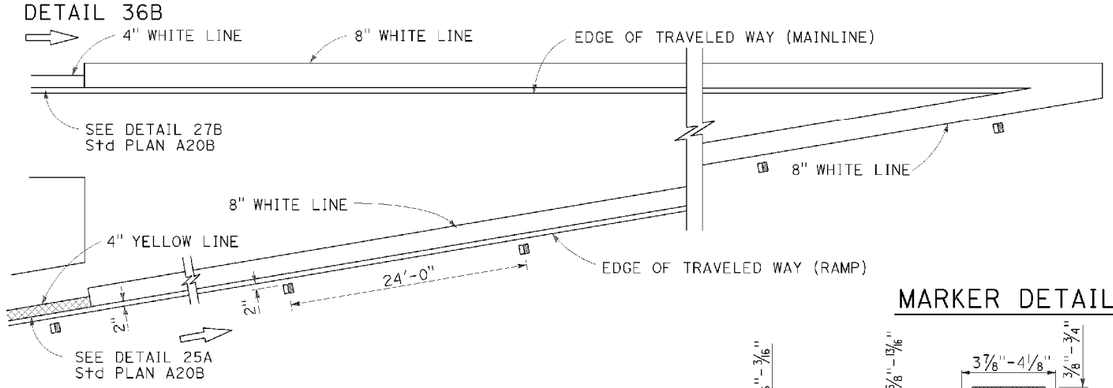


## LANE DROP AT EXIT RAMPS

DETAIL 37

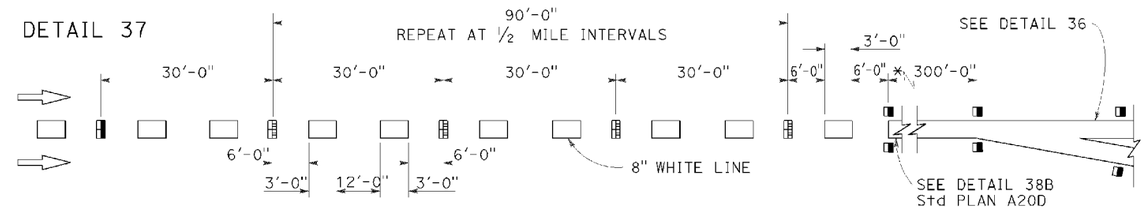


DETAIL 37A

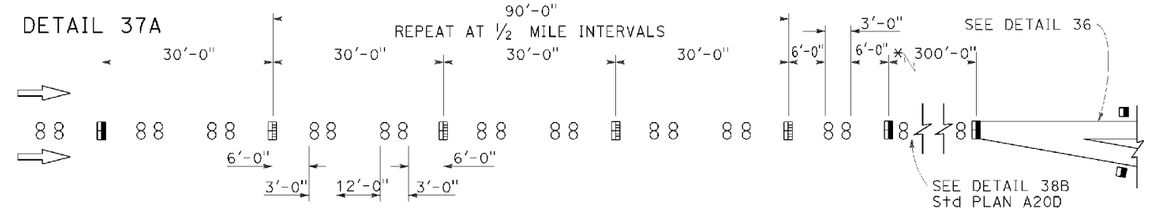


* The solid channelizing line shown may be omitted on short auxiliary lanes where weaving length is critical.

## LANE DROP AT INTERSECTIONS

DETAIL 37B

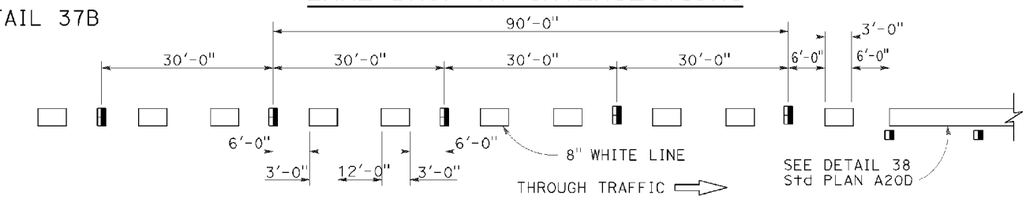


DETAIL 37C

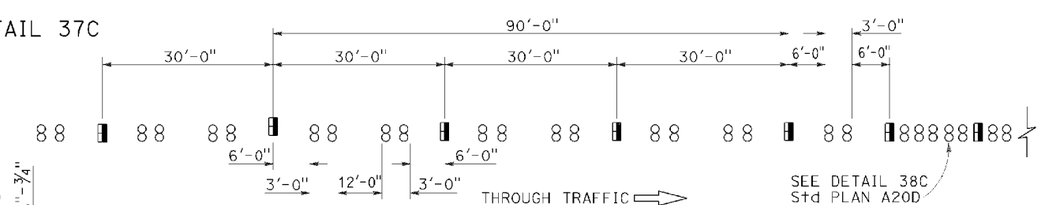


## MARKER DETAILS

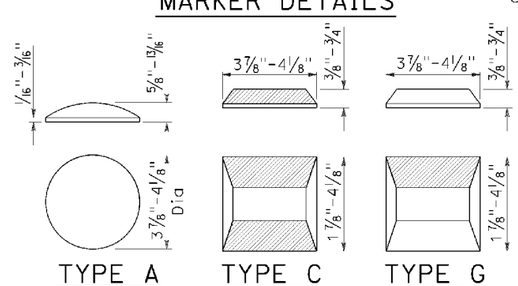


**LEGEND:**

MARKERS

- ○ TYPE A WHITE NON-REFLECTIVE
- TYPE C RED-CLEAR RETROREFLECTIVE
- TYPE G ONE-WAY CLEAR RETROREFLECTIVE

STATE OF CALIFORNIA
DEPARTMENT OF TRANSPORTATION

# PAVEMENT MARKERS AND TRAFFIC LINE TYPICAL DETAILS

NO SCALE

RSP A20C DATED JULY 19, 2013 SUPERSEDES STANDARD PLAN A20C DATED MAY 20, 2011 - PAGE 11 OF THE STANDARD PLANS BOOK DATED 2010.

**REVISED STANDARD PLAN RSP A20C**

**2010 REVISED STANDARD PLAN RSP A20C**

P:\PROJ\01\41500\drafting\sheets\0113000127va002.dgn

4-29-13

| DIST | COUNTY | ROUTE | POST MILES TOTAL PROJECT | SHEET No. | TOTAL SHEETS |
|---|---|---|---|---|---|
| 01 | Hum | 101 | 109.5/R125.8 | 45 | 100 |

REGISTERED C.V. ENGINEER

April 20, 2012
PLANS APPROVAL DATE

REGISTERED PROFESSIONAL ENGINEER
Roberta L. McLaughlin
No. C40375
Exp. 3-31-13
CIVIL
STATE OF CALIFORNIA

*THE STATE OF CALIFORNIA OR ITS OFFICERS OR AGENTS SHALL NOT BE RESPONSIBLE FOR THE ACCURACY OR COMPLETENESS OF SCANNED COPIES OF THIS PLAN SHEET.*

TO ACCOMPANY PLANS DATED May 23, 2016

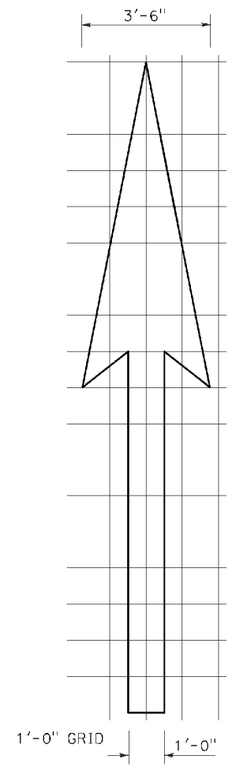


A=25 ft$^2$

TYPE I 18'-0" ARROW

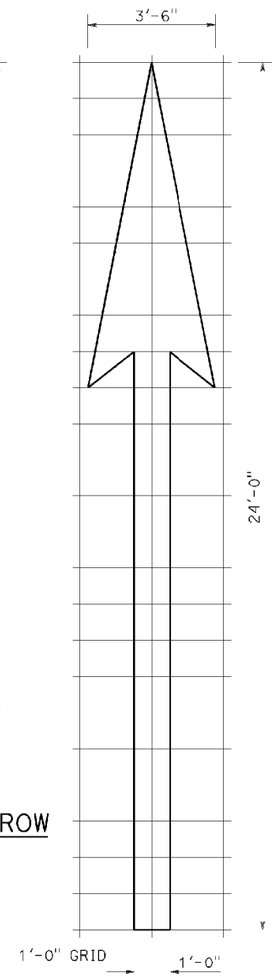


A=31 ft$^2$

TYPE I 24'-0" ARROW

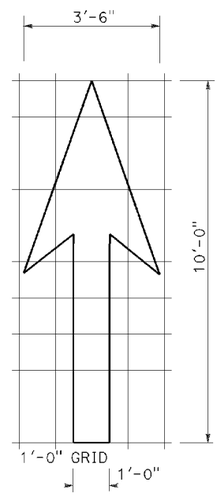


A=14 ft$^2$

TYPE I 10'-0" ARROW

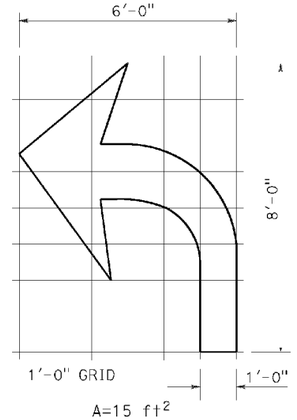


A=15 ft$^2$

TYPE IV (L) ARROW

(For Type IV (R) arrow, use mirror image)

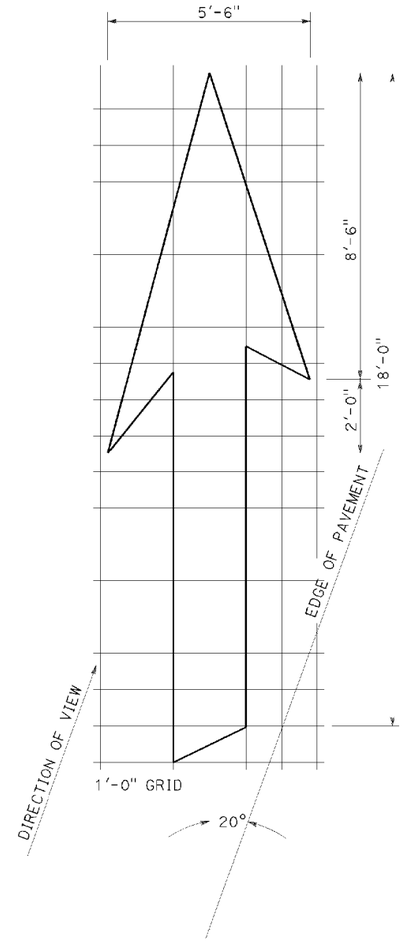


A=42 ft$^2$

TYPE VI ARROW

Right lane drop arrow
(For left lane, use mirror image)

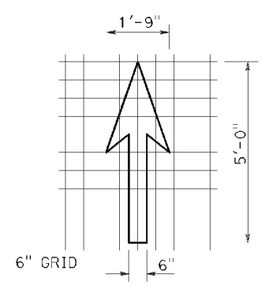


A=3.5 ft$^2$

BIKE LANE ARROW

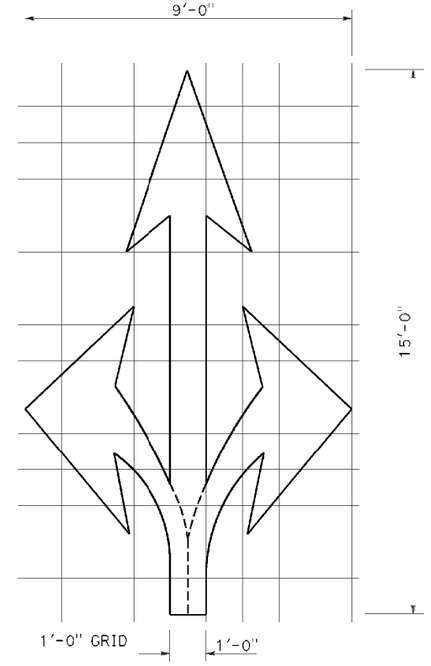


A=36 ft$^2$

TYPE VIII ARROW

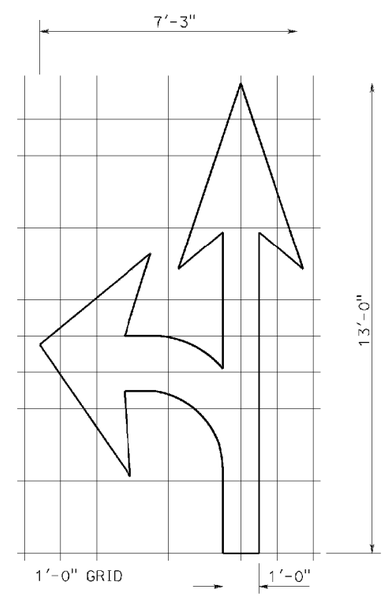


A=27 ft$^2$

TYPE VII (L) ARROW

(For Type VII (R) arrow, use mirror image)

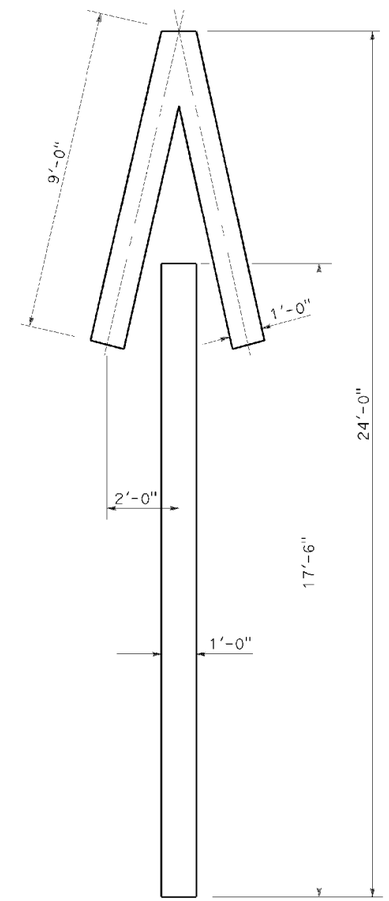


A=33 ft$^2$

TYPE V ARROW

**NOTE:**

Minor variations in dimensions may be accepted by the Engineer.

STATE OF CALIFORNIA
DEPARTMENT OF TRANSPORTATION

# PAVEMENT MARKINGS ARROWS

NO SCALE

RSP A24A DATED APRIL 20, 2012 SUPERSEDES STANDARD PLAN A24A DATED MAY 20, 2011 - PAGE 13 OF THE STANDARD PLANS BOOK DATED 2010.

**REVISED STANDARD PLAN RSP A24A**

**2010 REVISED STANDARD PLAN RSP A24A**

P:\PROJ\01\41500\drafting\sheets\0113000127va003.dgn

3-14-12

| DIST | COUNTY | ROUTE | POST MILES TOTAL PROJECT | SHEET No. | TOTAL SHEETS |
|---|---|---|---|---|---|
| 01 | Hum | 101 | 109.5/R125.8 | 46 | 100 |

REGISTERED CIVIL ENGINEER

October 19, 2012
PLANS APPROVAL DATE

REGISTERED PROFESSIONAL ENGINEER
Roberta L. McLaughlin
No. C40375
Exp. 3-31-13
CIVIL
STATE OF CALIFORNIA

*THE STATE OF CALIFORNIA OR ITS OFFICERS OR AGENTS SHALL NOT BE RESPONSIBLE FOR THE ACCURACY OR COMPLETENESS OF SCANNED COPIES OF THIS PLAN SHEET.*

**NOTE:** TO ACCOMPANY PLANS DATED May 23, 2016

Minor variations in dimensions may be accepted by the Engineer.

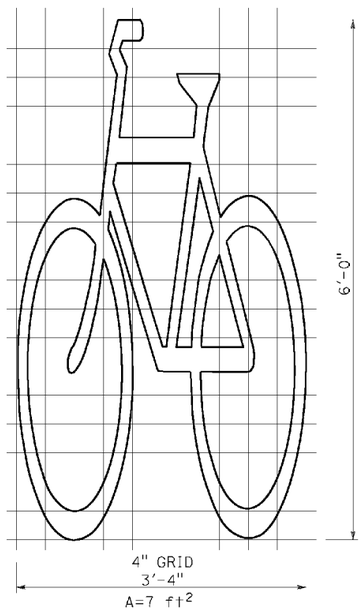


BIKE LANE SYMBOL WITHOUT PERSON

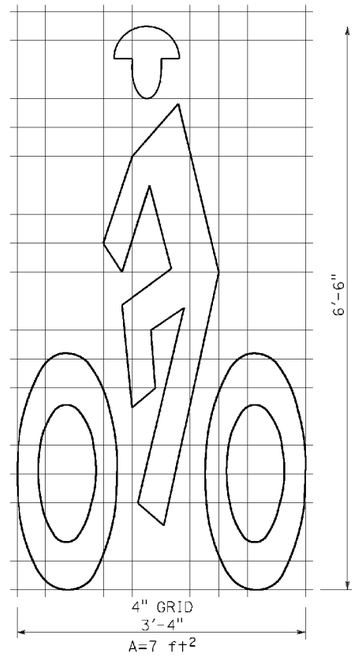


BIKE LANE SYMBOL WITH PERSON

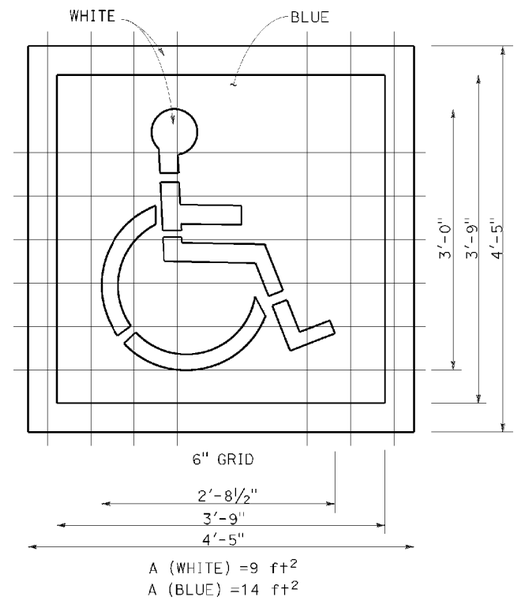


INTERNATIONAL SYMBOL OF ACCESSIBILITY (ISA) MARKING

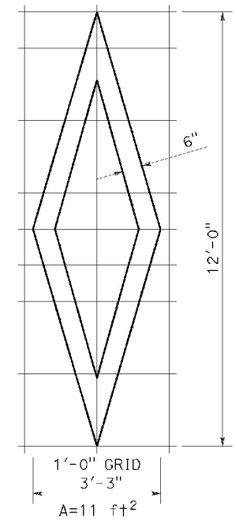


DIAMOND SYMBOL

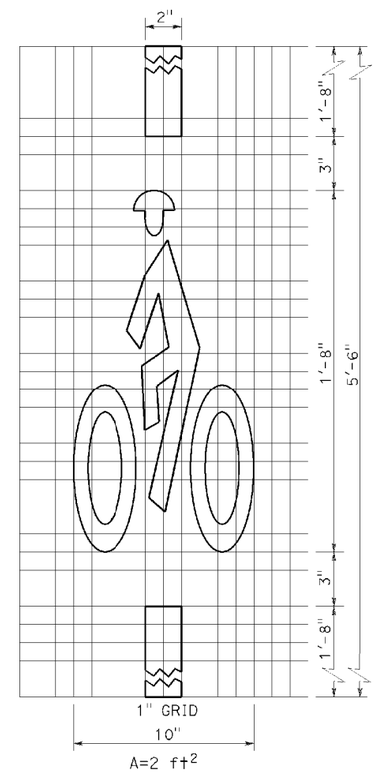


BICYCLE LOOP DETECTOR SYMBOL

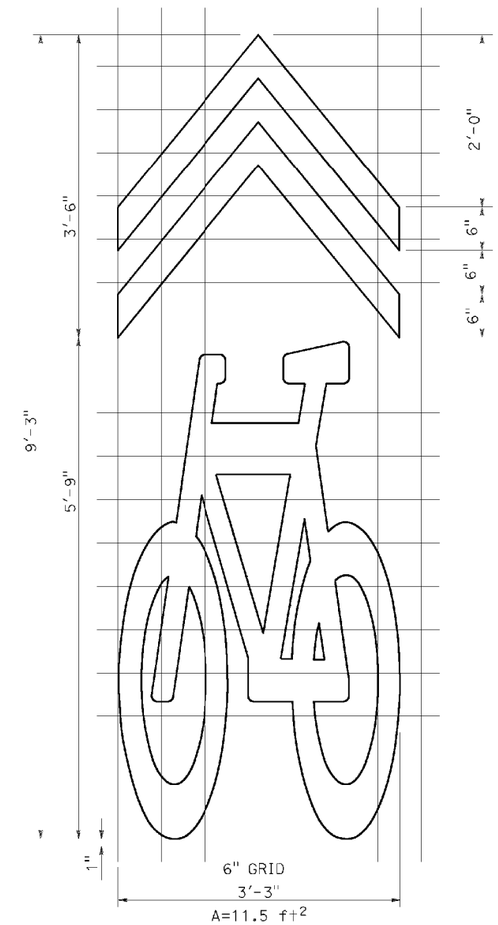


SHARED ROADWAY BICYCLE MARKING

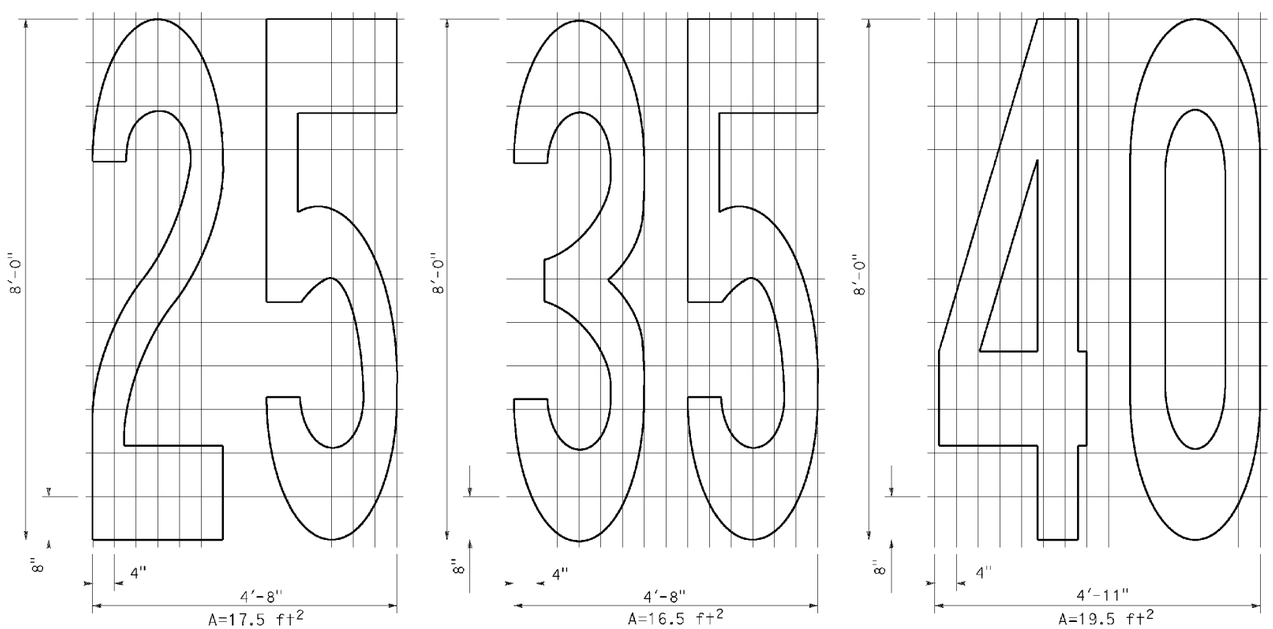


NUMERALS

STATE OF CALIFORNIA
DEPARTMENT OF TRANSPORTATION

# PAVEMENT MARKINGS SYMBOLS AND NUMERALS

NO SCALE

RSP A24C DATED OCTOBER 19, 2012 SUPERSEDES STANDARD PLAN A24C DATED MAY 20, 2011 - PAGE 15 OF THE STANDARD PLANS BOOK DATED 2010.

**REVISED STANDARD PLAN RSP A24C**

**2010 REVISED STANDARD PLAN RSP A24C**

P:\PROJ\01\41500\drafting\sheets\0113000127va004.dgn

6 28 12

| DIST | COUNTY | ROUTE | POST MILES TOTAL PROJECT | SHEET No. | TOTAL SHEETS |
|---|---|---|---|---|---|
| 01 | Hum | 101 | 109.5/R125.8 | 47 | 100 |

REGISTERED C.V. ENGINEER

July 20, 2012
PLANS APPROVAL DATE

REGISTERED PROFESSIONAL ENGINEER Roberta L. McLaughlin No. C40375 Exp. 3-31-13 CIVIL STATE OF CALIFORNIA

THE STATE OF CALIFORNIA OR ITS OFFICERS OR AGENTS SHALL NOT BE RESPONSIBLE FOR THE ACCURACY OR COMPLETENESS OF SCANNED COPIES OF THIS PLAN SHEET.

TO ACCOMPANY PLANS DATED May 23, 2016

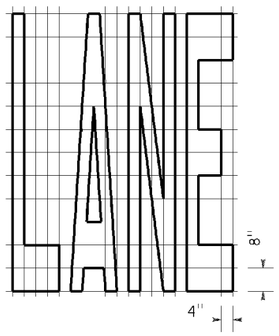


A=24 ft²

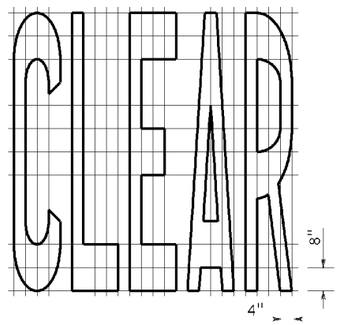


A=27 ft²

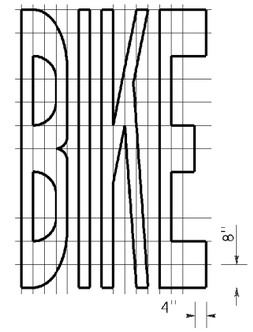


A=21 ft²

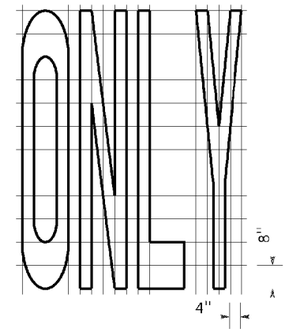


A=22 ft²

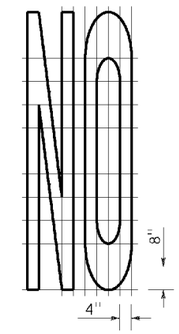


A=14 ft²

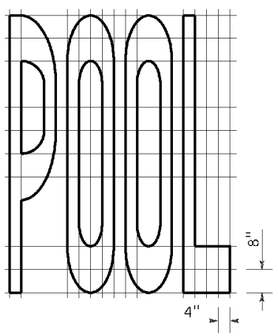


A=23 ft²

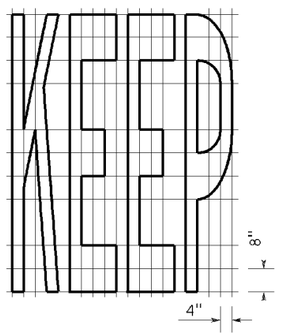


A=24 ft²

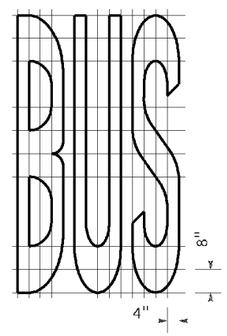


A=20 ft²

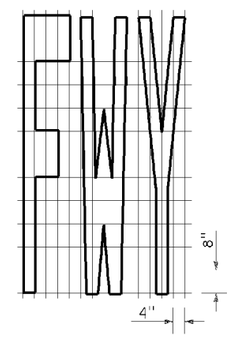


A=16 ft²

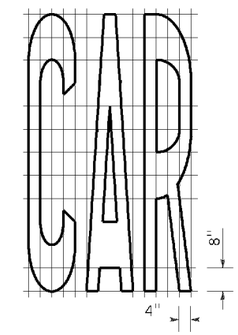


A=17 ft²

| WORD MARKINGS | | | |
|---|---|---|---|
| ITEM | ft² | ITEM | ft² |
| LANE | 24 | NO | 14 |
| POOL | 23 | BIKE | 21 |
| CAR | 17 | BUS | 20 |
| CLEAR | 27 | ONLY | 22 |
| KEEP | 24 | FWY | 16 |

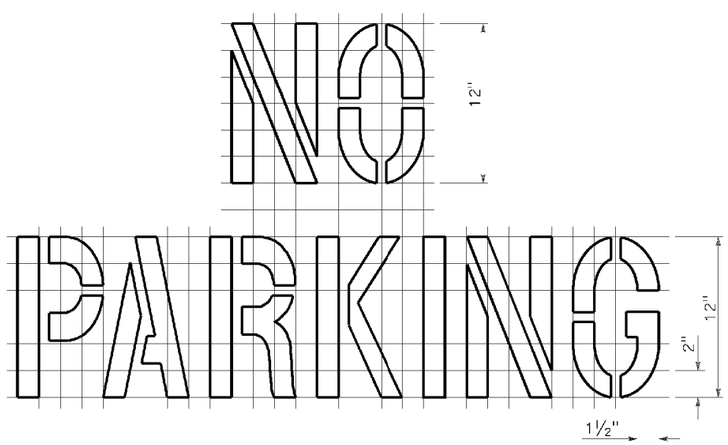


A=2 ft²
See Notes 6 and 7

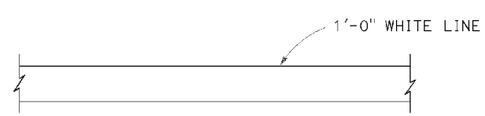


LIMIT LINE (STOP LINE)

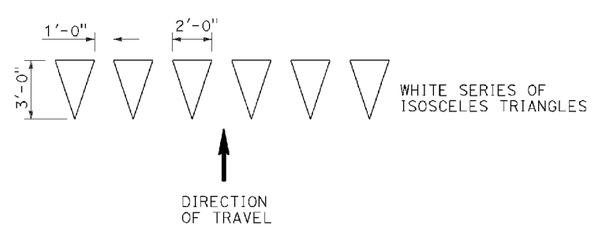


YIELD LINE

NOTES:

1. If a message consists of more than one word, it should read "UP", i.e., the first word should be nearest the driver.
2. The space between words should be at least four times the height of the characters for low speed roads, but not more than ten times the height of the characters. The space may be reduced appropriately where there is limited space because of local conditions.
3. Minor variations in dimensions may be accepted by the Engineer.
4. Portions of a letter, number or symbol may be separated by connecting segments not to exceed 2" in width.
5. The words "NO PARKING" pavement marking is to be used for parking facilities. For typical locations of markings, see Standard Plans A90A and A90B.
6. The words "NO PARKING", shall be painted in white letters no less than 1'-0" high on a contrasting background and located so that it is visible to traffic enforcement officials.

STATE OF CALIFORNIA
DEPARTMENT OF TRANSPORTATION

# PAVEMENT MARKINGS WORDS, LIMIT AND YIELD LINES

NO SCALE

RSP A24E DATED JULY 20, 2012 SUPERSEDES STANDARD PLAN A24E
DATED MAY 20, 2011 - PAGE 17 OF THE STANDARD PLANS BOOK DATED 2010.

**REVISED STANDARD PLAN RSP A24E**

**2010 REVISED STANDARD PLAN RSP A24E**

P:\PROJ\01\41500\drafting\sheets\0113000127va005.dgn

8-12-12

| DIST | COUNTY | ROUTE | POST MILES TOTAL PROJECT | SHEET No. | TOTAL SHEETS |
|---|---|---|---|---|---|
| 01 | Hum | 101 | 109.5/R125.8 | 48 | 100 |

REGISTERED C.V. ENGINEER

July 20, 2012
PLANS APPROVAL DATE

Roberta L. McLaughlin No. C40375 Exp. 3-31-13 CIVIL
REGISTERED PROFESSIONAL ENGINEER
STATE OF CALIFORNIA

*THE STATE OF CALIFORNIA OR ITS OFFICERS OR AGENTS SHALL NOT BE RESPONSIBLE FOR THE ACCURACY OR COMPLETENESS OF SCANNED COPIES OF THIS PLAN SHEET.*

TO ACCOMPANY PLANS DATED May 23, 2016

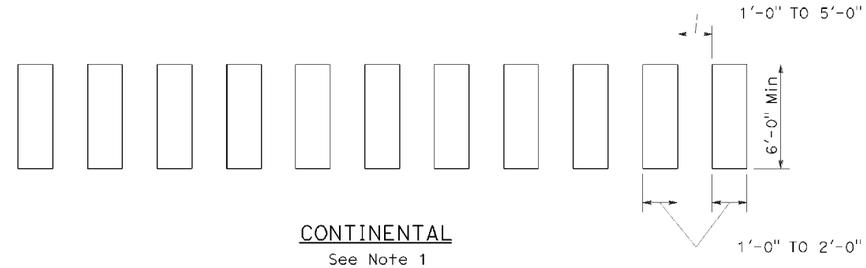


CONTINENTAL
See Note 1

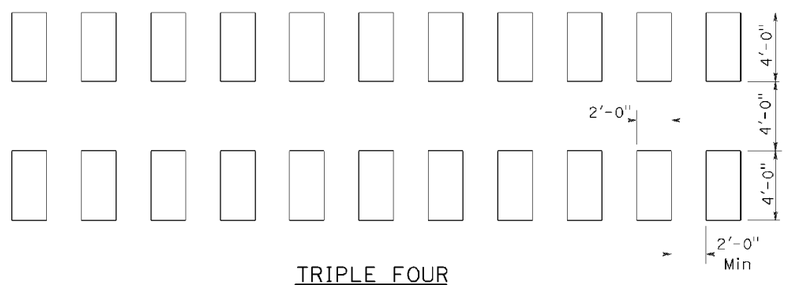


TRIPLE FOUR
See Note 1

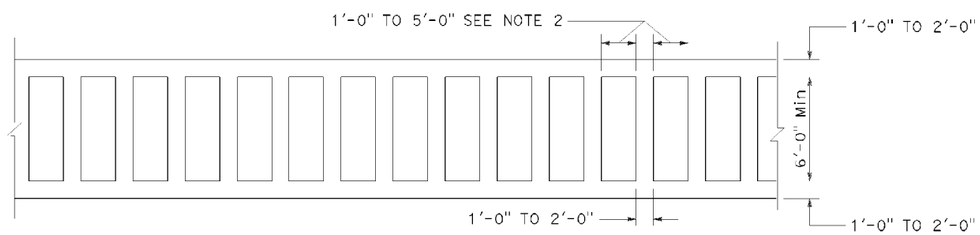


LADDER

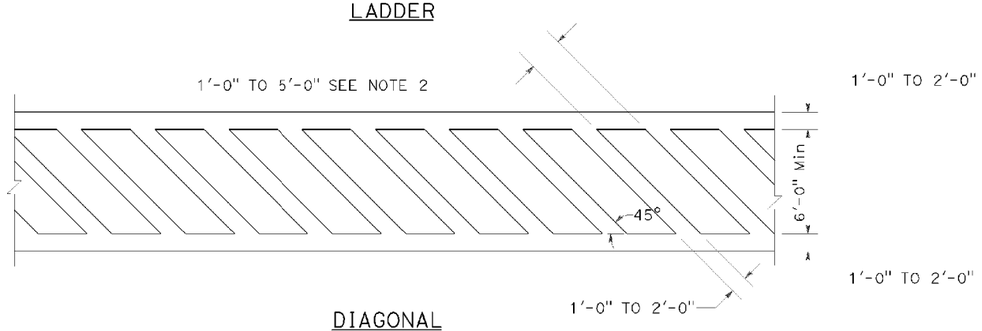


DIAGONAL

HIGHER VISIBILITY CROSSWALKS

NOTES:

1. Spaces between markings should be placed in wheel tracks of each lane.
2. Spacings not to exceed 2.5 times width of longitudinal line.
3. All crosswalk markings must be white except for those near schools must be yellow.

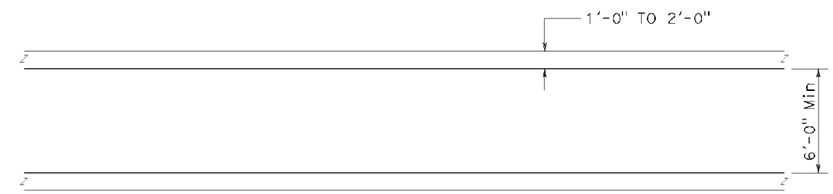


BASIC

STATE OF CALIFORNIA
DEPARTMENT OF TRANSPORTATION

# PAVEMENT MARKINGS CROSSWALKS

NO SCALE

RSP A24F DATED JULY 20, 2012 SUPPLEMENTS THE STANDARD PLANS BOOK DATED 2010.

**REVISED STANDARD PLAN RSP A24F**

**2010 REVISED STANDARD PLAN RSP A24F**

P:\PROJ\01\41500\drafting\sheets\0113000127va006.dgn

6-28-12

| DIST | COUNTY | ROUTE | POST MILES TOTAL PROJECT | SHEET No. | TOTAL SHEETS |
|---|---|---|---|---|---|
| 01 | Hum | 101 | 109.5/R125.8 | 49 | 100 |

Randell D. Hiatt
REGISTERED CIVIL ENGINEER

July 19, 2013
PLANS APPROVAL DATE

REGISTERED PROFESSIONAL ENGINEER Randell D. Hiatt No. C50200 Exp. 6-30-15 CIVIL STATE OF CALIFORNIA

THE STATE OF CALIFORNIA OR ITS OFFICERS OR AGENTS SHALL NOT BE RESPONSIBLE FOR THE ACCURACY OR COMPLETENESS OF SCANNED COPIES OF THIS PLAN SHEET.

TO ACCOMPANY PLANS DATED May 23, 2016

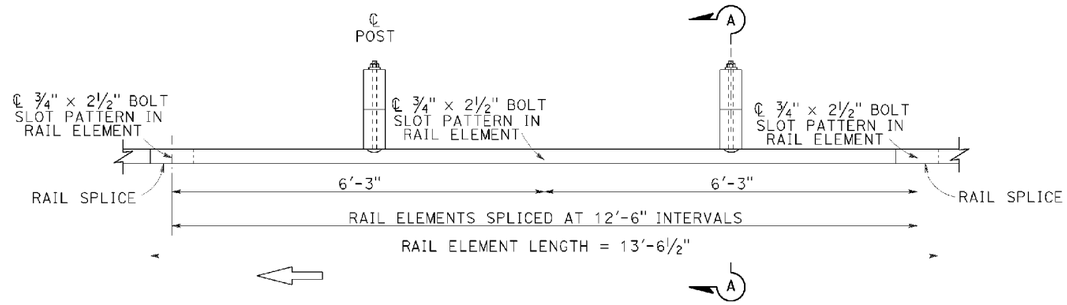


PLAN

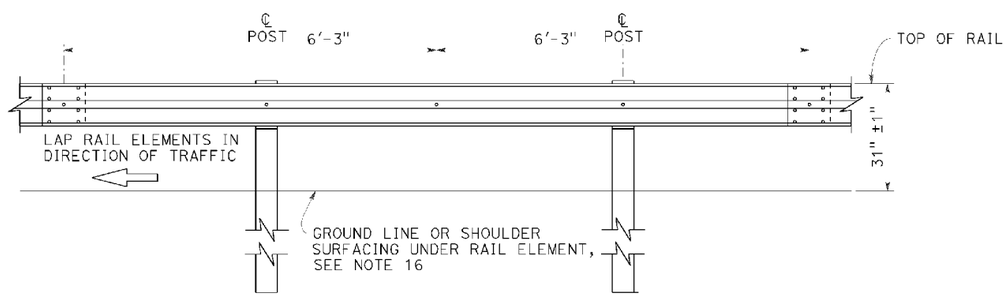


ELEVATION

## MIDWEST GUARDRAIL SYSTEM WITH WOOD POST AND BLOCKS

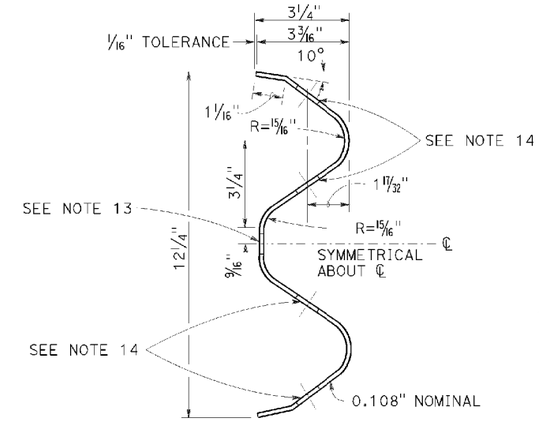


SECTION THRU RAIL ELEMENT

## NOTES:

1. For details of steel post installations, see Revised Standard Plan RSP A77L2.
2. For details of standard hardware used to construct MGS, see Revised Standard Plan RSP A77M1.
3. For details of wood posts and wood blocks used to construct MGS, see Revised Standard Plan RSP A77N1.
4. For additional installation details, see Revised Standard Plan RSP A77N3.
5. MGS post spacing to be 6'-3" center to center, except as otherwise noted.
6. For MGS typical layouts, see the A77P, A77Q and A77R Series of Standard Plans.
7. If railing is connected to terminal system end treatment, use 31" height terminal system end treatment.
8. For MGS end anchor details, see Revised Standard Plans RSP A77S1 and RSP A77T2.
9. For details of MGS transition to bridge railing, see Revised Standard Plan RSP A77U4.
10. For additional details of MSG connection to bridge railing, see Revised Standard Plans RSP A77U1, RSP A77U2 and RSP A77V1.
11. For MGS connection details to abutments and walls, see Revised Standard Plan RSP A77U3.
12. For typical MGS delineation and dike positioning details, see Revised Standard Plan RSP A77N4.
13. Slotted hole for bolted connection of rail element to block and post. See "Section Thru Rail Element".
14. Slotted holes for splice bolts to overlap ends of rail element. See "Section Thru Rail Element".
15. Additional hole in uppermost portion of line post is for potential future adjustments of railing height. See Revised Standard Plan RSP A77N1.
16. Install posts in soil.

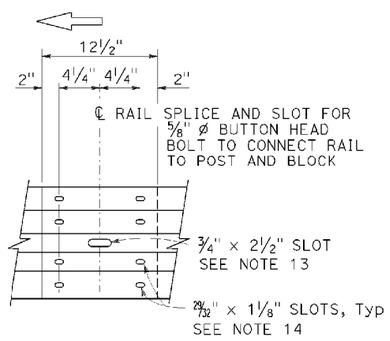


ELEVATION

## RAIL ELEMENT SPLICE DETAIL

a) Connect the over lapped end of the rail elements with ⅝" ø × 1⅜" button head oval shoulder splice bolts inserted into the 29⁄32" × 1⅛" slots and bolted together with ⅝" ø recessed hex nuts. Recess of hex nut points toward rail element. A total of 8 bolts and nuts are to be used at each rail splice connection.

b) The ends of the rail elements are to be overlapped in the direction of traffic (see details).

c) Where end cap is to be attached to the end of a rail element, a total of 4 of the above described splice bolts and nuts are to be used.

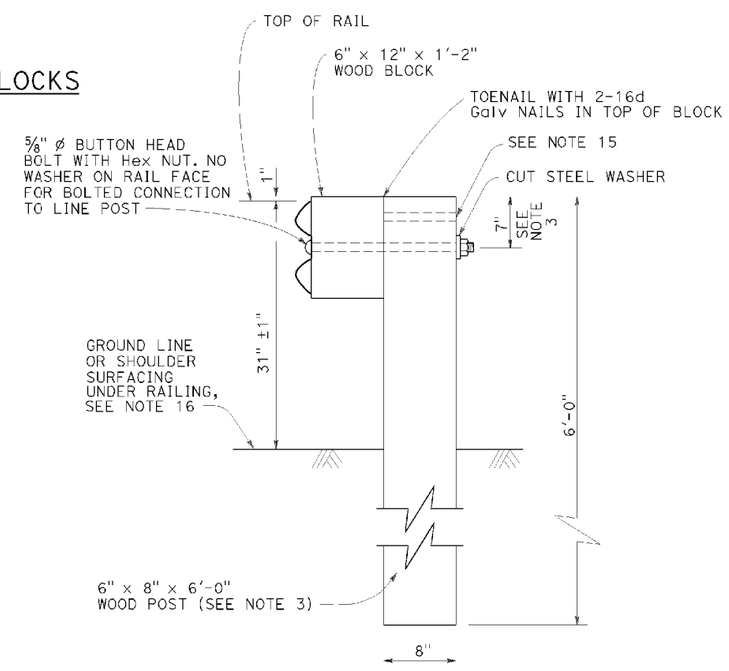


SECTION A-A

## TYPICAL WOOD LINE POST INSTALLATION

See Note 4

STATE OF CALIFORNIA
DEPARTMENT OF TRANSPORTATION

# MIDWEST GUARDRAIL SYSTEM STANDARD RAILING SECTION (WOOD POST WITH WOOD BLOCK)

NO SCALE

RSP A77L1 DATED JULY 19, 2013 SUPPLEMENTS STANDARD PLANS BOOK DATED 2010.

**REVISED STANDARD PLAN RSP A77L1**

**2010 REVISED STANDARD PLAN RSP A77L1**

P:\PROJ\01\41500\drafting\sheets\0113000127va007.dgn

7-3-13

| DIST | COUNTY | ROUTE | POST MILES TOTAL PROJECT | SHEET No. | TOTAL SHEETS |
|---|---|---|---|---|---|
| 01 | Hum | 101 | 109.5/R125.8 | 50 | 100 |

Randell D. Hiatt
REGISTERED CIVIL ENGINEER

July 19, 2013
PLANS APPROVAL DATE

REGISTERED PROFESSIONAL ENGINEER
Randell D. Hiatt
No. C50200
Exp. 6-30-15
CIVIL
STATE OF CALIFORNIA

THE STATE OF CALIFORNIA OR ITS OFFICERS OR AGENTS SHALL NOT BE RESPONSIBLE FOR THE ACCURACY OR COMPLETENESS OF SCANNED COPIES OF THIS PLAN SHEET.

TO ACCOMPANY PLANS DATED May 23, 2016

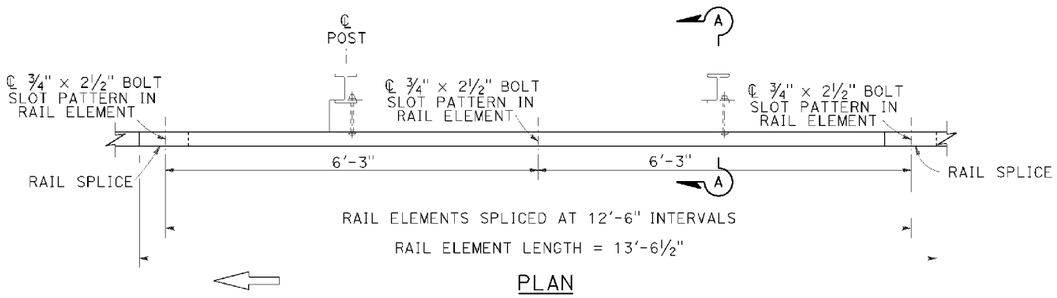


PLAN

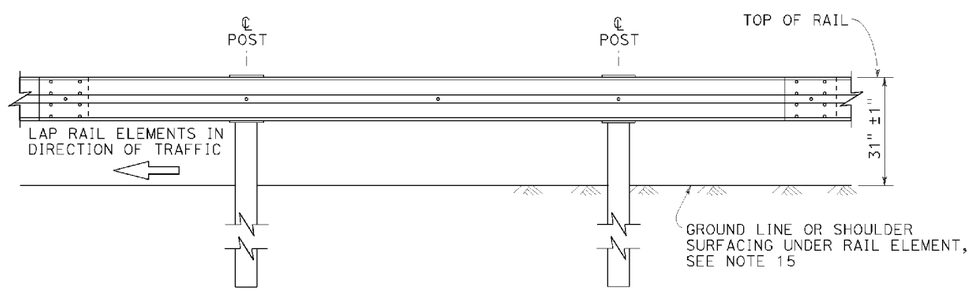


ELEVATION

## MIDWEST GUARDRAIL SYSTEM WITH STEEL POSTS AND NOTCHED WOOD OR NOTCHED RECYCLED PLASTIC BLOCKS

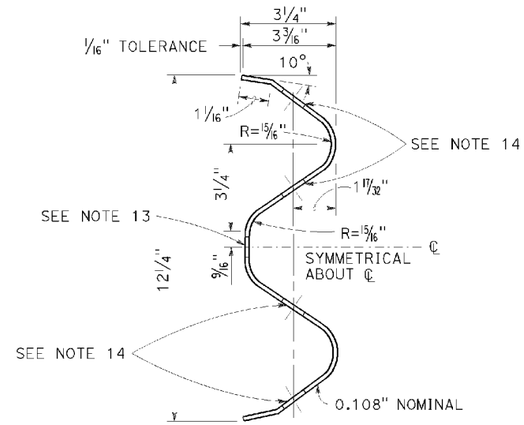


SECTION THRU RAIL ELEMENT

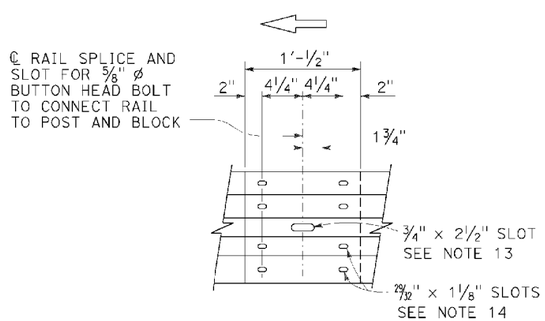


ELEVATION

## RAIL ELEMENT SPLICE DETAIL

a) Connect the over lapped end of the rail elements with ⅝" ø x 1⅜" button head oval shoulder splice bolts inserted into the 29/32" x 1⅛" slots and bolted together with ⅝" ø recessed hex nuts. Recess of hex nut points toward rail element. A total of 8 bolts and nuts are to be used at each rail splice connection.

b) The ends of the rail elements are to be overlapped in the direction of traffic (see details).

c) Where end cap is to be attached to the end of a rail element, a total of 4 of the above described splice bolts and nuts are to be used.

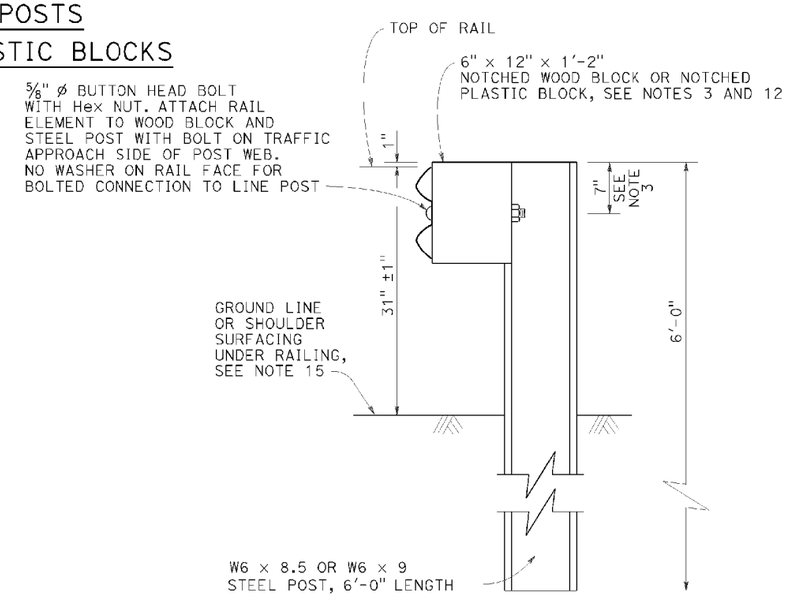


SECTION A-A

## TYPICAL STEEL LINE POST INSTALLATION

See Note 4

NOTES:

1. For details of wood post installations, see Revised Standard Plan RSP A77L1.
2. For details of standard hardware used to construct MGS, see Revised Standard Plan RSP A77M1.
3. For details of steel posts and notched wood blocks used to construct MGS, see Revised Standard Plan RSP A77N2.
4. For additional installation details, see Revised Standard Plan RSP A77N3.
5. MGS post spacing to be 6'-3" center to center, except as otherwise noted.
6. For MGS typical layouts, see the A77P, A77Q and A77R Series of Standard Plans.
7. If railing is connected to terminal system end treatment, use 31" height terminal system end treatment.
8. For MGS end anchor details, see Revised Standard Plans RSP A77S1 and RSP A77T2.
9. For details of MGS transition to bridge railing, see Revised Standard Plan RSP A77U4.
10. For additional details of MGS connection to bridge railings, see Revised Standard Plans RSP A77U1, RSP A77U2 and RSP A77V1.
11. For dike positioning and MGS delineation details, see Revised Standard Plan RSP A77N4.
12. Notched face of block faces steel post.
13. Slotted hole for bolted connection of rail element to block and post. See "Section Thru Rail Element".
14. Slotted holes for splice bolts to overlap ends of rail element. See "Section Thru Rail Element".
15. Install posts in soil.

STATE OF CALIFORNIA
DEPARTMENT OF TRANSPORTATION

# MIDWEST GUARDRAIL SYSTEM STANDARD RAILING SECTION (STEEL POST WITH NOTCHED WOOD OR NOTCHED RECYCLED PLASTIC BLOCK)

NO SCALE

RSP A77L2 DATED JULY 19, 2013 SUPPLEMENTS THE STANDARD PLANS BOOK DATED 2010.

**REVISED STANDARD PLAN RSP A77L2**

**2010 REVISED STANDARD PLAN RSP A77L2**

P:\PROJ\01\41500\drafting\sheets\0113000127va008.dgn

7-3-13

| DIST | COUNTY | ROUTE | POST MILES TOTAL PROJECT | SHEET No. | TOTAL SHEETS |
|---|---|---|---|---|---|
| 01 | Hum | 101 | 109.5/R125.8 | 51 | 100 |

Randell D. Hiatt
REGISTERED CIVIL ENGINEER

July 19, 2013
PLANS APPROVAL DATE

REGISTERED PROFESSIONAL ENGINEER
Randell D. Hiatt
No. C50200
Exp. 6-30-15
CIVIL
STATE OF CALIFORNIA

THE STATE OF CALIFORNIA OR ITS OFFICERS OR AGENTS SHALL NOT BE RESPONSIBLE FOR THE ACCURACY OR COMPLETENESS OF SCANNED COPIES OF THIS PLAN SHEET.

TO ACCOMPANY PLANS DATED May 23, 2016

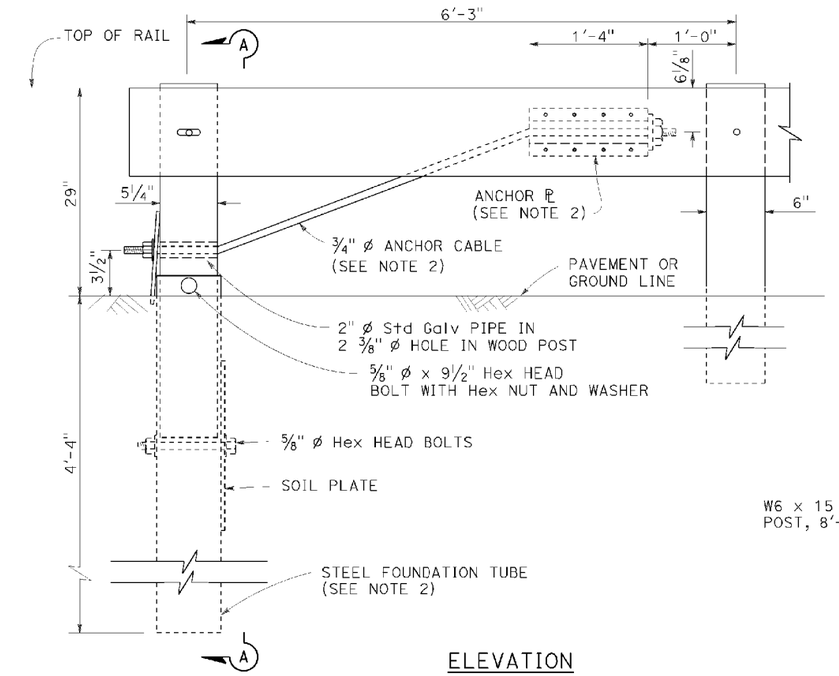


ELEVATION
END ANCHOR
ASSEMBLY (TYPE SFT)

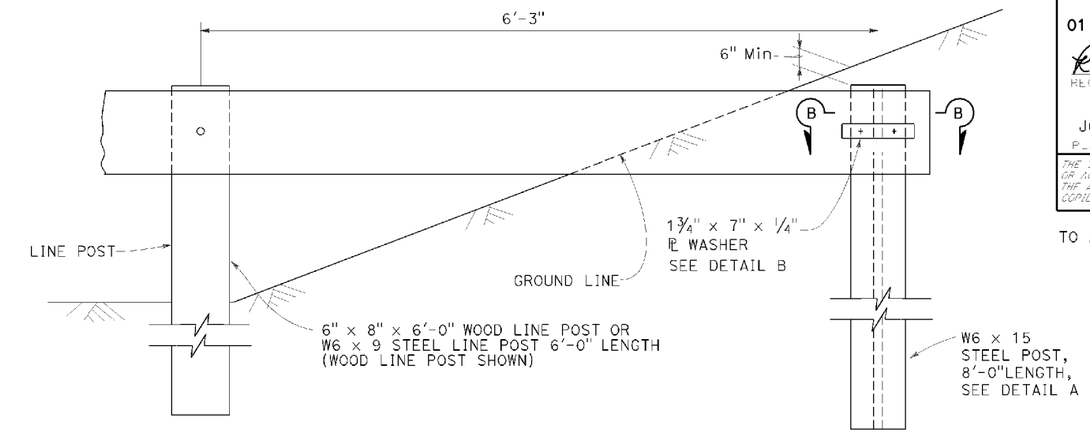


BURIED POST END ANCHOR

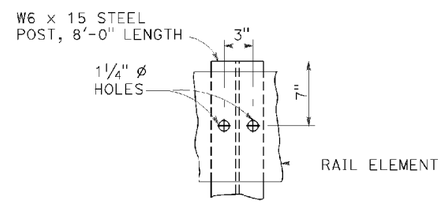


DETAIL A

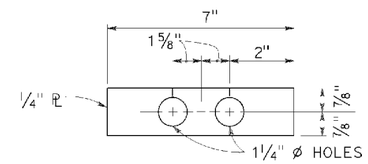


DETAIL B

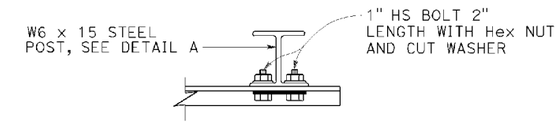


SECTION B-B

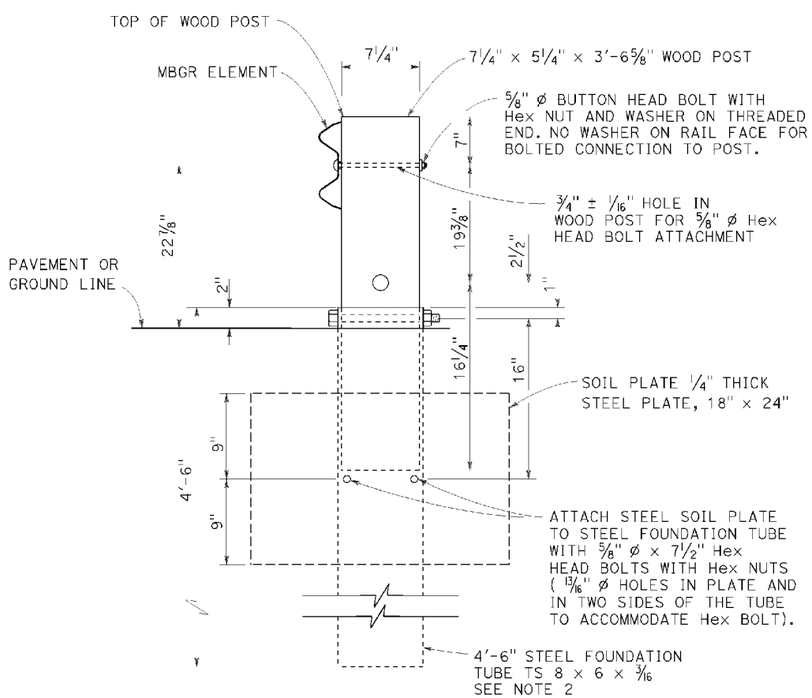


SECTION A-A

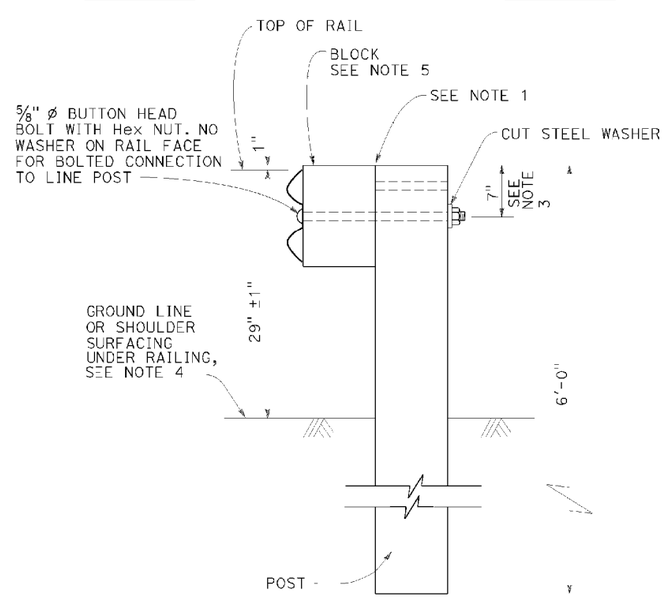


TYPICAL LINE
POST INSTALLATION

NOTES:

1. For wood post and wood block, toenail with 2-16d Galv nails in top of block. For steel post and notched wood or plastic block, notched face of block faces steel post.
2. A 6'-0" Length steel foundation tube, TS 8 x 6 x 3/16, without a soil plate, may be furnished and installed in place of the 4'-6" length steel foundation tube and soil plate shown, Minimum embadment of the 6'-0" length tube shall be 5'-9". A 5/8" ø Hex head bolt and nut shall be installed in the hole in the 6'-0" length tube to keep the wood post from dropping into the tube.
3. To connect railing to 27" terminal system end treatment, transition the top of railing height at a ratio of 120:1 to terminal system end treatment height plus one 12'-6" standard railing section at the transitioned height for a horizontal connection to the end treatment.
4. Install posts in soil.
5. See Revised Standard Plans RSP A77N1 and RSP A77N2 for details.
6. Holes excavation in the slope to construct the buried post end anchor shall be backfilled with selected earth, placed in layers approximately 1'-0" thick. Each layer shall be moistened and thoroughly compacted.

STATE OF CALIFORNIA
DEPARTMENT OF TRANSPORTATION

# METAL BEAM GUARD RAILING RECONSTRUCT INSTALLATION

NO SCALE

RSP A77L3 DATED JULY 19, 2013 SUPPLEMENTS THE STANDARD PLANS BOOK DATED 2010.

**REVISED STANDARD PLAN RSP A77L3**

2010 REVISED STANDARD PLAN RSP A77L3

P:\PROJ\01\41500\drafting\sheets\0113000127va009.dgn

7-'6-13

| DIST | COUNTY | ROUTE | POST MILES TOTAL PROJECT | SHEET No. | TOTAL SHEETS |
|---|---|---|---|---|---|
| 01 | Hum | 101 | 109.5/R125.8 | 52 | 100 |

Randell D. Hiatt
REGISTERED CIVIL ENGINEER

July 19, 2013
PLANS APPROVAL DATE

REGISTERED PROFESSIONAL ENGINEER
Randell D. Hiatt
No. C50200
Exp. 6-30-15
CIVIL
STATE OF CALIFORNIA

THE STATE OF CALIFORNIA OR ITS OFFICERS OR AGENTS SHALL NOT BE RESPONSIBLE FOR THE ACCURACY OR COMPLETENESS OF SCANNED COPIES OF THIS PLAN SHEET.

TO ACCOMPANY PLANS DATED May 23, 2016

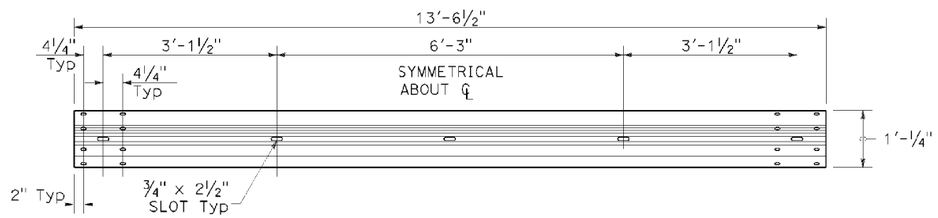


TYPICAL RAIL ELEMENT

NOTE:

1. Slotted holes for splice bolts to overlap ends of rail element.

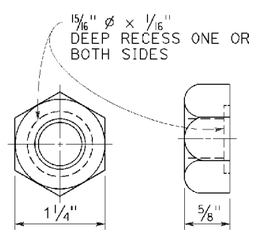


⅝" ø RECESS NUT

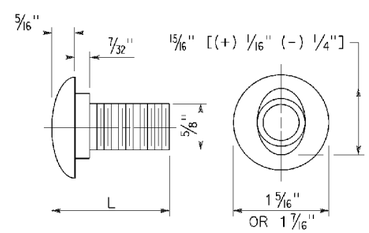


⅝" ø BUTTON HEAD BOLT

BUTTON HEAD BOLT

| L | THREAD LENGTH |
|---|---|
| 1⅜" | FULL THREAD LENGTH |
| 2" | FULL THREAD LENGTH |
| 10" | 4" Min THREAD LENGTH |
| 18" | 4" Min THREAD LENGTH |
| 20" | 4" Min THREAD LENGTH |
| 22" | 4" Min THREAD LENGTH |
| 26" | 4" Min THREAD LENGTH |
| 36" | 4" Min THREAD LENGTH |
| ** 2¾" | 2" Min THREAD LENGTH |
| ** 19" | 4" Min THREAD LENGTH |

** For nested rail applications.

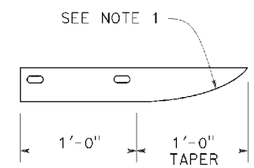


PLAN

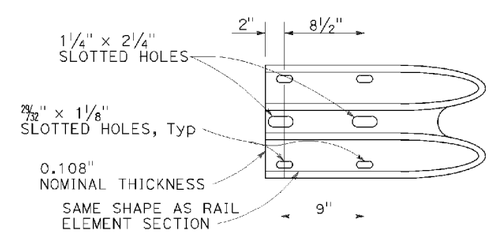


ELEVATION

END CAP

(TYPE A)

STATE OF CALIFORNIA
DEPARTMENT OF TRANSPORTATION

# MIDWEST GUARDRAIL SYSTEM STANDARD HARDWARE

NO SCALE

RSP A77M1 DATED JULY 19, 2013 SUPPLEMENTS THE STANDARD PLANS BOOK DATED 2010.

**REVISED STANDARD PLAN RSP A77M1**

2010 REVISED STANDARD PLAN RSP A77M1

P:\PROJ\01\41500\drafting\sheets\0113000127va010.dgn

7-3-13

| DIST | COUNTY | ROUTE | POST MILES TOTAL PROJECT | SHEET No. | TOTAL SHEETS |
|---|---|---|---|---|---|
| 01 | Hum | 101 | 109.5/R125.8 | 53 | 100 |

Randell D. Hiatt
REGISTERED CIVIL ENGINEER

July 19, 2013
PLANS APPROVAL DATE

REGISTERED PROFESSIONAL ENGINEER
Randell D. Hiatt
No. C50200
Exp. 6-30-15
CIVIL
STATE OF CALIFORNIA

THE STATE OF CALIFORNIA OR ITS OFFICERS OR AGENTS SHALL NOT BE RESPONSIBLE FOR THE ACCURACY OR COMPLETENESS OF SCANNED COPIES OF THIS PLAN SHEET.

TO ACCOMPANY PLANS DATED May 23, 2016

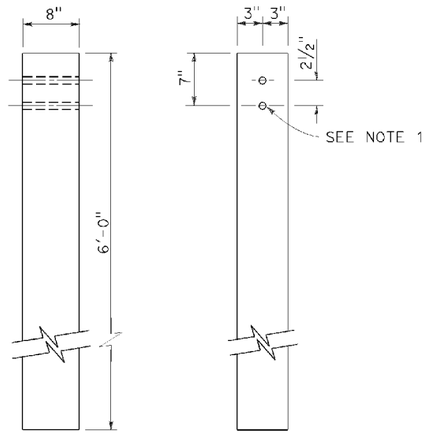


SIDE FRONT

6" x 8" WOOD POST
See Note 3

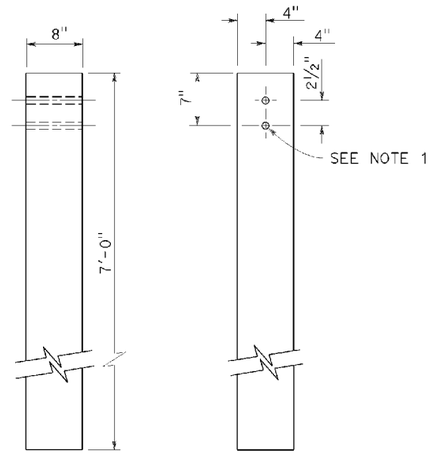


SIDE FRONT

8" x 8" WOOD POST
See Note 4

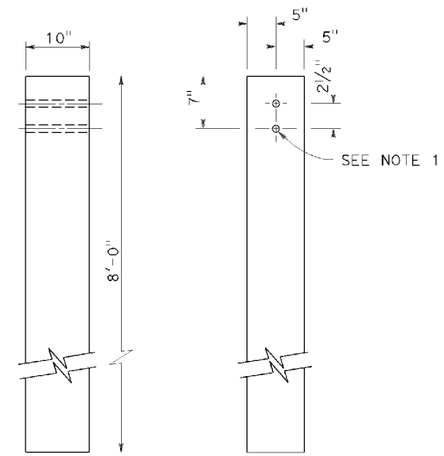


SIDE FRONT

10" x 10" WOOD POST
See Note 5

## NOTES:

1. All holes in wood posts and blocks shall be ¾" Dia ± 1/16".
2. Dimensions shown for wood post are nominal.
3. This post and block combination used for standard line post sections of MGS.
4. This post and 8" x 12" block combination used for line post sections of MGS on narrow roadways.
5. This post and 8" x 12" block combination is typically used where strengthened line post sections of MGS are warranted to shield fixed objects.
6. See Revised Standard Plan RSP A77L3 for use of 6" x 8" and 8" x 8" wood blocks.

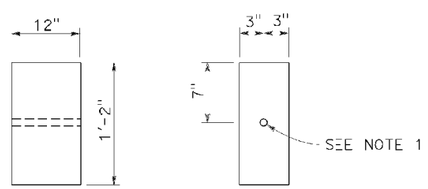


SIDE FRONT

6" x 12" WOOD BLOCK
See Note 3

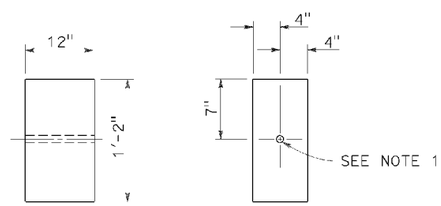


SIDE FRONT

8" x 12" WOOD BLOCK

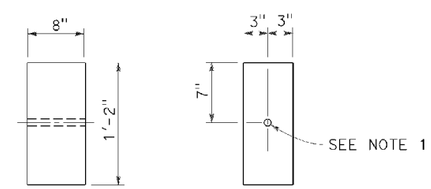


SIDE FRONT

6" x 8" WOOD BLOCK
Only for use with metal beam guard rail see Note 6

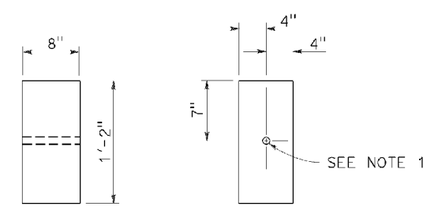


SIDE FRONT

8" x 8" WOOD BLOCK
Only for use with metal beam guard rail see Note 6

STATE OF CALIFORNIA
DEPARTMENT OF TRANSPORTATION

# MIDWEST GUARDRAIL SYSTEM WOOD POST AND WOOD BLOCK DETAILS

NO SCALE

RSP A77N1 DATED JULY 19, 2013 SUPPLEMENTS THE STANDARD PLANS BOOK DATED 2010.

**REVISED STANDARD PLAN RSP A77N1**

**2010 REVISED STANDARD PLAN RSP A77N1**

P:\PROJ\01\41500\drafting\sheets\0113000127va011.dgn

7-3-13

| DIST | COUNTY | ROUTE | POST MILES TOTAL PROJECT | SHEET No. | TOTAL SHEETS |
|---|---|---|---|---|---|
| 01 | Hum | 101 | 109.5/R125.8 | 54 | 100 |

Randell D. Hiatt
REGISTERED CIVIL ENGINEER

November 15, 2013
PLANS APPROVAL DATE

REGISTERED PROFESSIONAL ENGINEER
Randell D. Hiatt
No. C50200
Exp. 6-30-15
CIVIL
STATE OF CALIFORNIA

THE STATE OF CALIFORNIA OR ITS OFFICERS OR AGENTS SHALL NOT BE RESPONSIBLE FOR THE ACCURACY OR COMPLETENESS OF SCANNED COPIES OF THIS PLAN SHEET.

TO ACCOMPANY PLANS DATED May 23, 2016

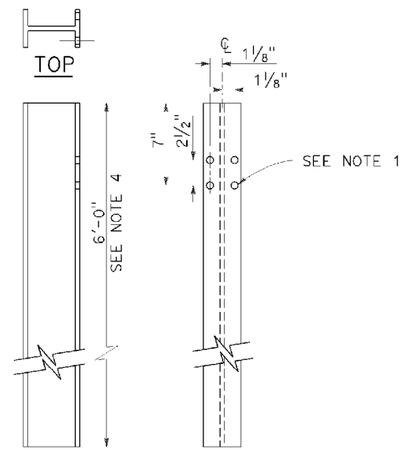


W6 x 9 OR W6 x 8.5
STEEL POST
See Note 4

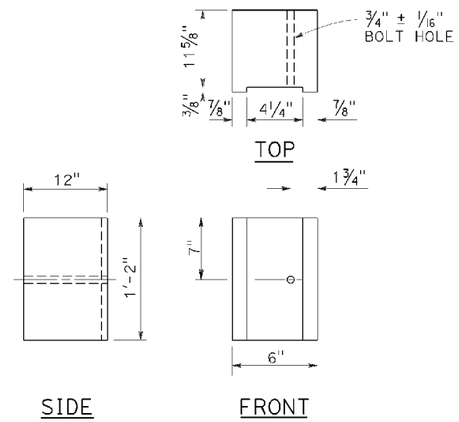


6" x 12"
NOTCHED WOOD BLOCK
See Notes 2 and 3

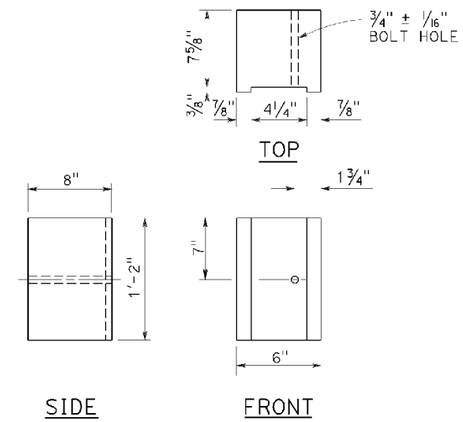


6" x 8"
NOTCHED WOOD BLOCK
Only for use with metal beam guard railing. See Note 5

NOTES:

1. All holes in steel post shall be 13/16" Dia maximum.
2. Dimensions shown for wood block are nominal.
3. Notched face of block faces steel post.
4. 6'-0" length posts to be used for typical roadway installation. See Revised Standard Plan RSP A77N3.
5. See Revised Standard Plan RSP A77L3 for use of 6" x 8" and 8" x 8" notched wood blocks.
6. This post and 8" x 12" block combination to be used for line post sections of MGS on narrow roadways and where strengthened line post sections of MGS are warranted to shield fixed objects.

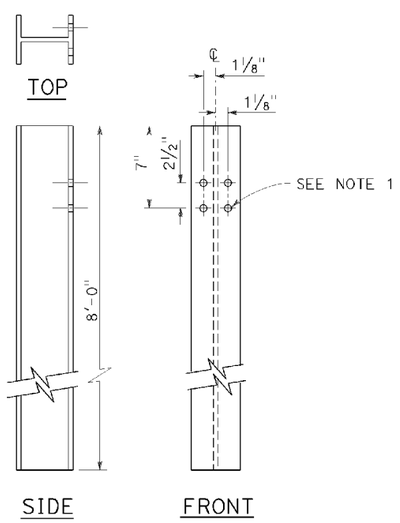


W6 x 15
STEEL POST
See Note 6

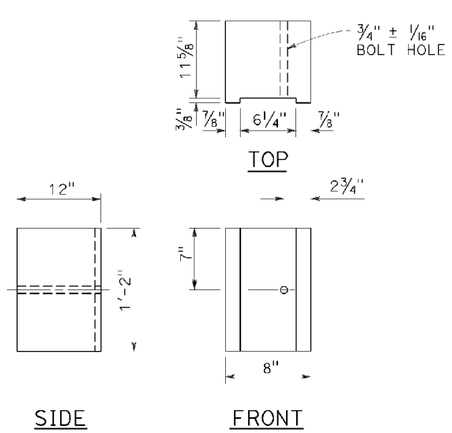


8" x 12"
NOTCHED WOOD BLOCK
See Notes 2 and 3

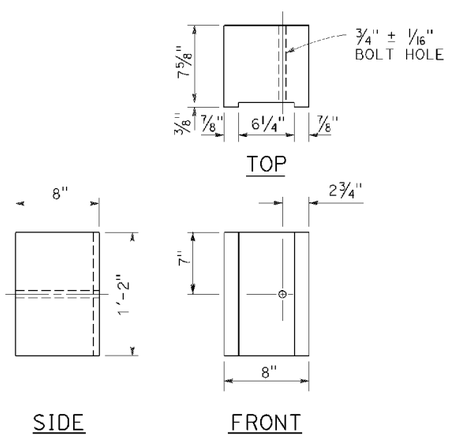


8" x 8"
NOTCHED WOOD BLOCK
Only for use with metal beam guard railing. See Note 5

STATE OF CALIFORNIA
DEPARTMENT OF TRANSPORTATION

# MIDWEST GUARDRAIL SYSTEM STEEL POST AND NOTCHED WOOD BLOCK DETAILS

NO SCALE

RSP A77N2 DATED NOVEMBER 15, 2013 SUPERSEDES RSP A77N2
DATED JULY 19, 2013 THAT SUPPLEMENTS THE STANDARD PLANS BOOK DATED 2010.

**REVISED STANDARD PLAN RSP A77N2**

**2010 REVISED STANDARD PLAN RSP A77N2**

P:\PROJ\01\41500\drafting\sheets\01130001270a012.dgn

| DIST | COUNTY | ROUTE | POST MILES TOTAL PROJECT | SHEET No. | TOTAL SHEETS |
|---|---|---|---|---|---|
| 01 | Hum | 101 | 109.5/R125.8 | 55 | 100 |

Randell D. Hiatt
REGISTERED CIVIL ENGINEER

November 15, 2013
PLANS APPROVAL DATE

REGISTERED PROFESSIONAL ENGINEER Randell D. Hiatt No. C50200 Exp. 6-30-15 CIVIL STATE OF CALIFORNIA

THE STATE OF CALIFORNIA OR ITS OFFICERS OR AGENTS SHALL NOT BE RESPONSIBLE FOR THE ACCURACY OR COMPLETENESS OF SCANNED COPIES OF THIS PLAN SHEET.

TO ACCOMPANY PLANS DATED May 23, 2016

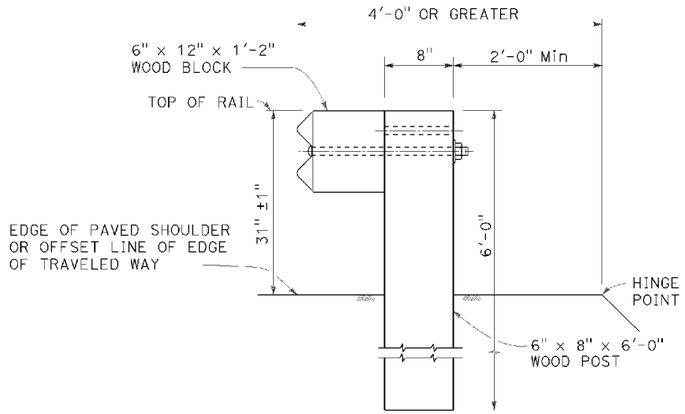


DETAIL A

TYPICAL ROADWAY INSTALLATION

See Note 1

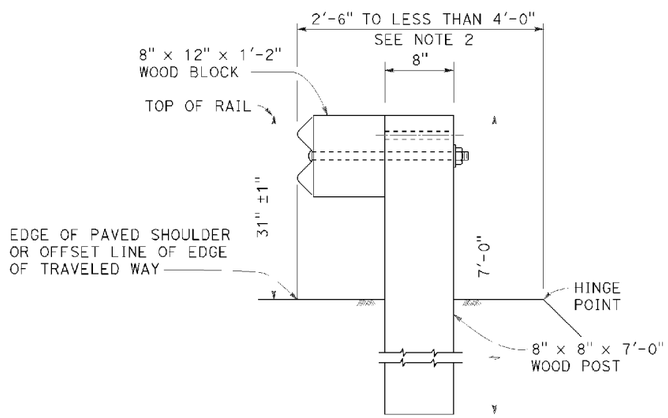


DETAIL B

NARROW ROADWAY INSTALLATION

See Note 1

POST EMBEDMENT

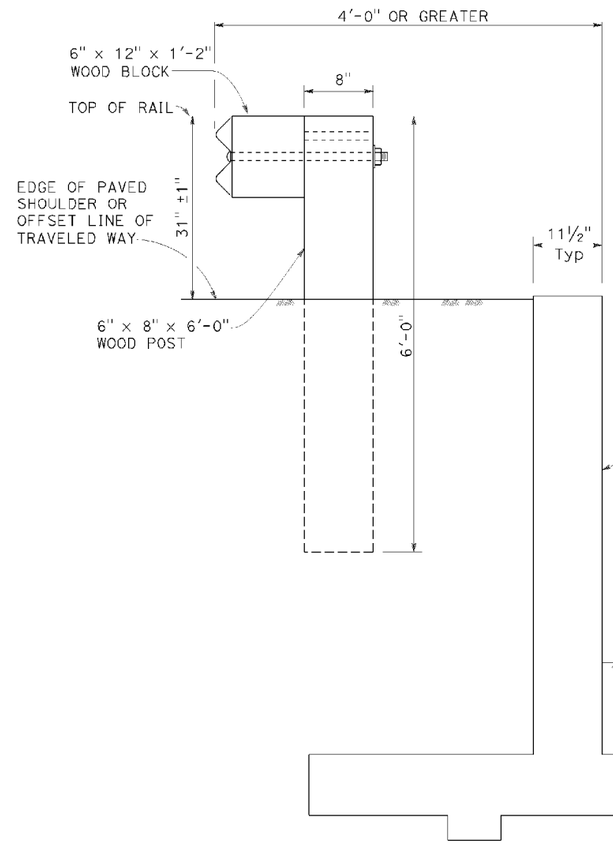


DETAIL C

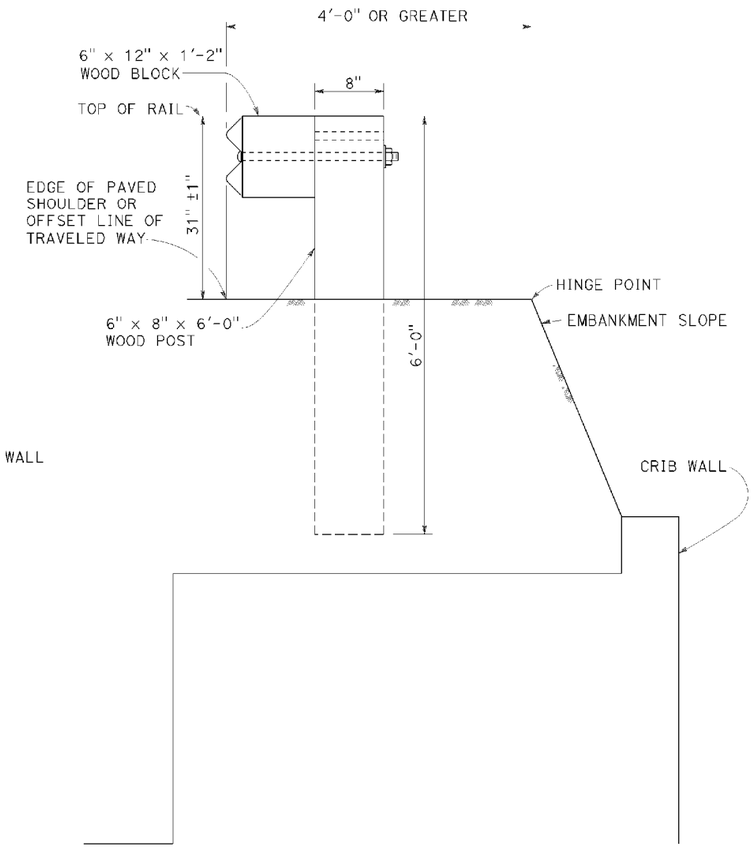


DETAIL D

INSTALLATION AT EARTH RETAINING WALLS

NOTES:

1. These installation details also applicable to steel line post installations. For Detail A, C, and D, where steel line post installations are constructed, W6 x 8.5 or W6 x 9 steel post, 6'-0" in length, with 6" x 12" x 1'-2" notched wood blocks or notched recycled plastic blocks are to be used in place of the size of wood post and wood block shown. For Detail B, where steel line post installations are constructed, W6 x 15 steel post, 8'-0" in length, with 8" x 12" x 1'-2" notched wood blocks or notched recycled plastic blocks are to be used in place of the size of wood post and wood block shown. For additional installation details, see Revised Standard Plan RSP A77L1 and RSP A77L2.
2. Where the distance between the face of the rail and the hinge point is less than 2'-6", see the Project Plans for special details.
3. For dike positioning with MGS installations, see Revised Standard Plan RSP A77N4.

STATE OF CALIFORNIA
DEPARTMENT OF TRANSPORTATION

# MIDWEST GUARDRAIL SYSTEM TYPICAL LINE POST EMBEDMENT AND HINGE POINT OFFSET DETAILS

NO SCALE

RSP A77N3 DATED NOVEMBER 15, 2013 SUPERSEDES RSP A77N3 DATED JULY 19, 2013 THAT SUPPLEMENTS THE STANDARD PLANS BOOK DATED 2010.

**REVISED STANDARD PLAN RSP A77N3**

**2010 REVISED STANDARD PLAN RSP A77N3**

P:\PROJ\01\41500\drafting\sheets\0113000127va013.dgn

| DIST | COUNTY | ROUTE | POST MILES TOTAL PROJECT | SHEET No. | TOTAL SHEETS |
|---|---|---|---|---|---|
| 01 | Hum | 101 | 109.5/R125.8 | 56 | 100 |

Randell D. Hiatt
REGISTERED CIVIL ENGINEER

July 19, 2013
PLANS APPROVAL DATE

REGISTERED PROFESSIONAL ENGINEER
Randell D. Hiatt
No. C50200
Exp. 6-30-15
CIVIL
STATE OF CALIFORNIA

THE STATE OF CALIFORNIA OR ITS OFFICERS OR AGENTS SHALL NOT BE RESPONSIBLE FOR THE ACCURACY OR COMPLETENESS OF SCANNED COPIES OF THIS PLAN SHEET.

TO ACCOMPANY PLANS DATED May 23, 2016

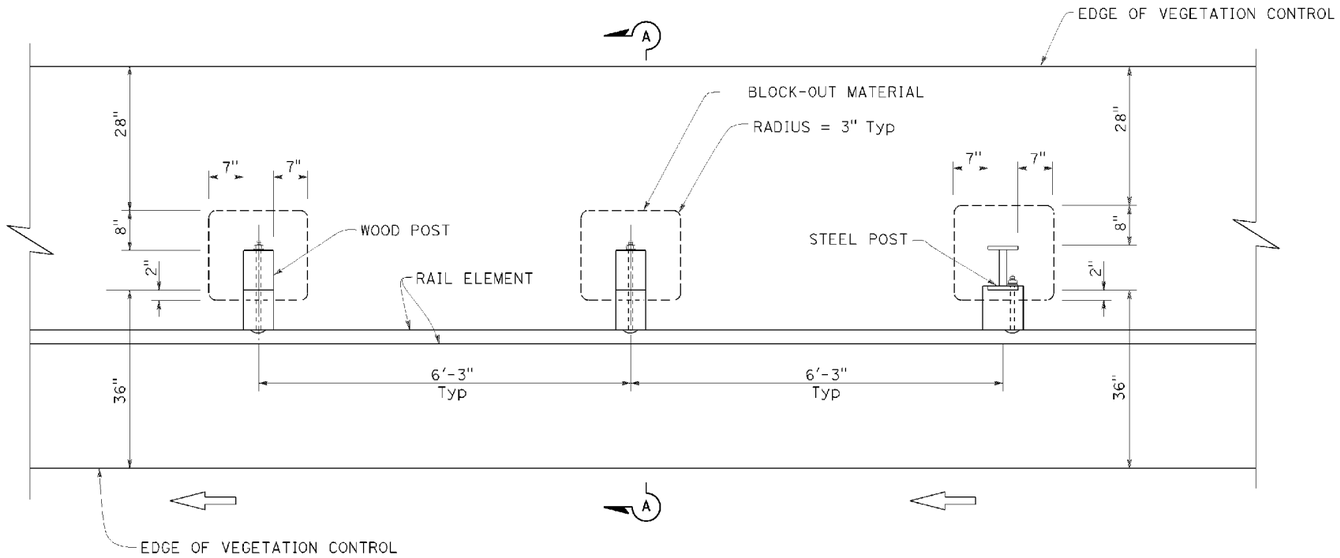


PLAN

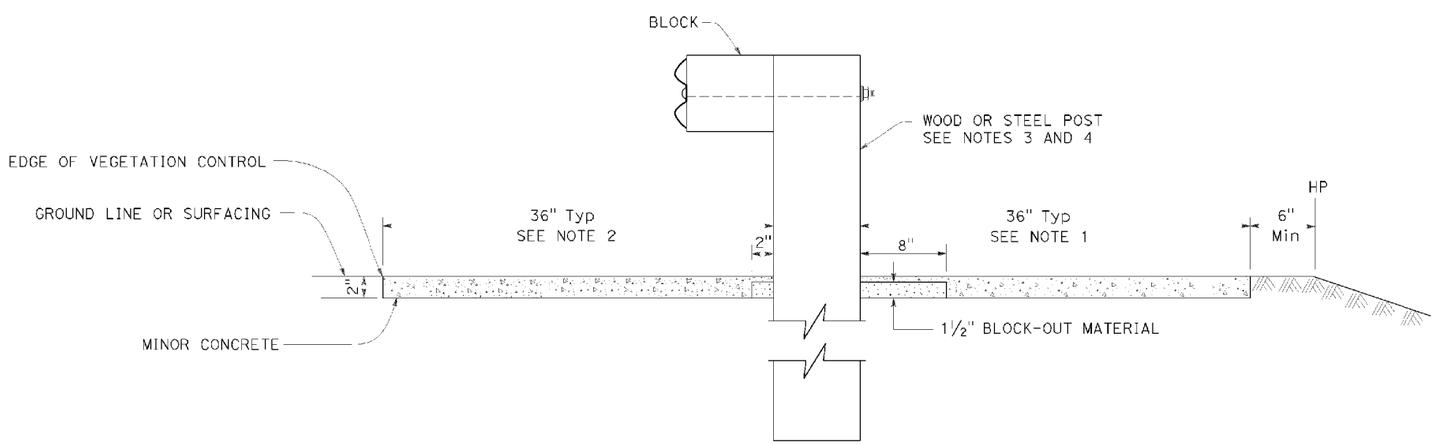


SECTION A-A

NOTES:

1. Where the distance between back of post and hinge point is less than 42", construct vegetation control to 6" from hinge point while maintaining the 8" block-out at back of post. If the 8" block-out at back of post can not be maintained, construct vegetation control flush with the back edge of post.
2. Where dike is constructed under railing, construct vegetation control to back edge of dike. Where paved shoulder is constructed within 36" in front of the post, construct vegetation control to the edge of paved shoulder.
3. For wood post sizes, see Revised Standard Plan RSP A77N1.
4. For steel post sizes, see Revised Standard Plan RSP A77N2.
5. For details not shown, see Revised Standard Plans RSP A77L1 and RSP A77L2.

STATE OF CALIFORNIA
DEPARTMENT OF TRANSPORTATION

# MIDWEST GUARDRAIL SYSTEM TYPICAL VEGETATION CONTROL STANDARD RAILING SECTION

NO SCALE

RSP A77N5 DATED JULY 19, 2013 SUPPLEMENTS THE STANDARD PLANS BOOK DATED 2010.

**REVISED STANDARD PLAN RSP A77N5**

2010 REVISED STANDARD PLAN RSP A77N5

P:\PROJ\01\41500\drafting\sheets\0113000127va014.dgn

7-3-13

| DIST | COUNTY | ROUTE | POST MILES TOTAL PROJECT | SHEET No. | TOTAL SHEETS |
|---|---|---|---|---|---|
| 01 | Hum | 101 | 109.5/R125.8 | 57 | 100 |

Randell D. Hiatt
REGISTERED CIVIL ENGINEER

July 19, 2013
PLANS APPROVAL DATE

REGISTERED PROFESSIONAL ENGINEER
Randell D. Hiatt
No. C50200
Exp. 6-30-15
CIVIL
STATE OF CALIFORNIA

THE STATE OF CALIFORNIA OR ITS OFFICERS OR AGENTS SHALL NOT BE RESPONSIBLE FOR THE ACCURACY OR COMPLETENESS OF SCANNED COPIES OF THIS PLAN SHEET.

TO ACCOMPANY PLANS DATED May 23, 2016

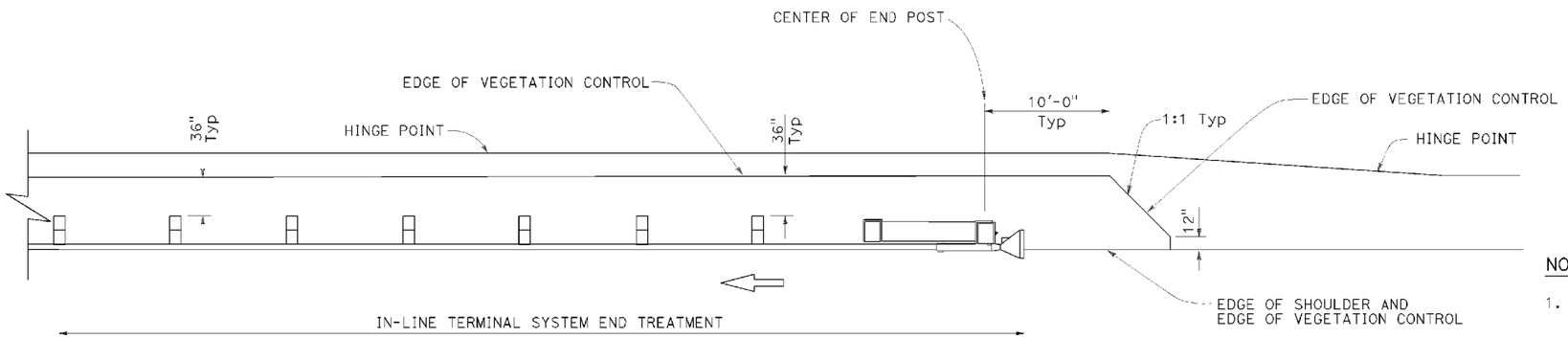


PLAN

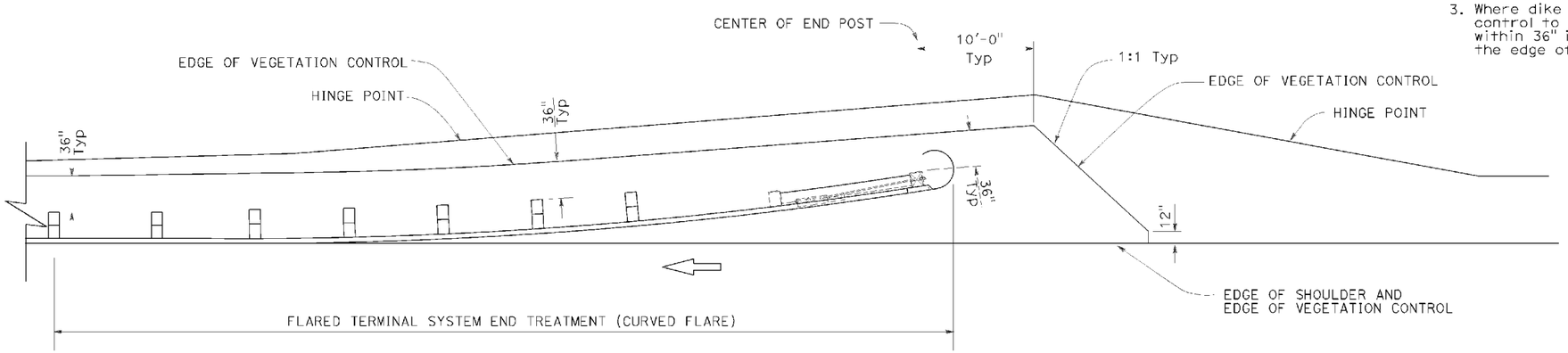


PLAN

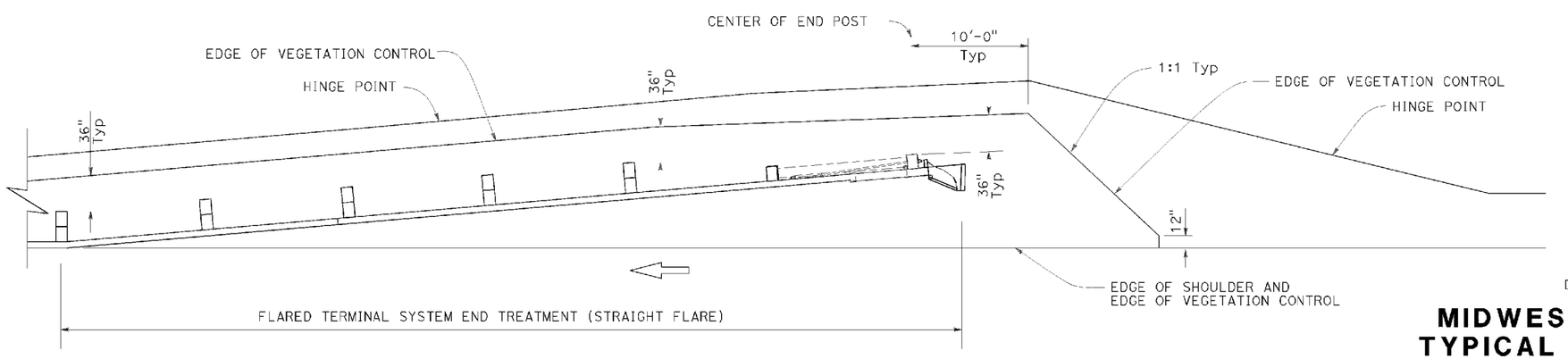


PLAN

NOTES:

1. See Revised Standard Plan RSP A77N5 for additional vegetation control details.
2. Where the distance between back of post and hinge point is less than 42", construct vegetation control to 6" from hinge point while maintaining the 8" block-out at back of post. If the 8" block-out at back of post can not be maintained, construct vegetation control flush with the back edge of post.
3. Where dike is constructed under railing, construct vegetation control to back edge of dike. Where paved shoulder is constructed within 36" in front of the post, construct vegetation control to the edge of paved shoulder.

STATE OF CALIFORNIA
DEPARTMENT OF TRANSPORTATION

# MIDWEST GUARDRAIL SYSTEM TYPICAL VEGETATION CONTROL FOR TERMINAL SYSTEM END TREATMENTS

NO SCALE

RSP A77N6 DATED JULY 19, 2013 SUPPLEMENTS THE STANDARD PLANS BOOK DATED 2010.

**REVISED STANDARD PLAN RSP A77N6**

**2010 REVISED STANDARD PLAN RSP A77N6**

P:\PROJ\01\41500\drafting\sheets\0113000127va015.dgn

8-12-13

| DIST | COUNTY | ROUTE | POST MILES TOTAL PROJECT | SHEET No. | TOTAL SHEETS |
|---|---|---|---|---|---|
| 01 | Hum | 101 | 109.5/R125.8 | 58 | 100 |

Randell D. Hiatt
REGISTERED CIVIL ENGINEER

July 19, 2013
PLANS APPROVAL DATE

REGISTERED PROFESSIONAL ENGINEER Randell D. Hiatt No. C50200 Exp. 6-30-15 CIVIL STATE OF CALIFORNIA

THE STATE OF CALIFORNIA OR ITS OFFICERS OR AGENTS SHALL NOT BE RESPONSIBLE FOR THE ACCURACY OR COMPLETENESS OF SCANNED COPIES OF THIS PLAN SHEET.

TO ACCOMPANY PLANS DATED May 23, 2016

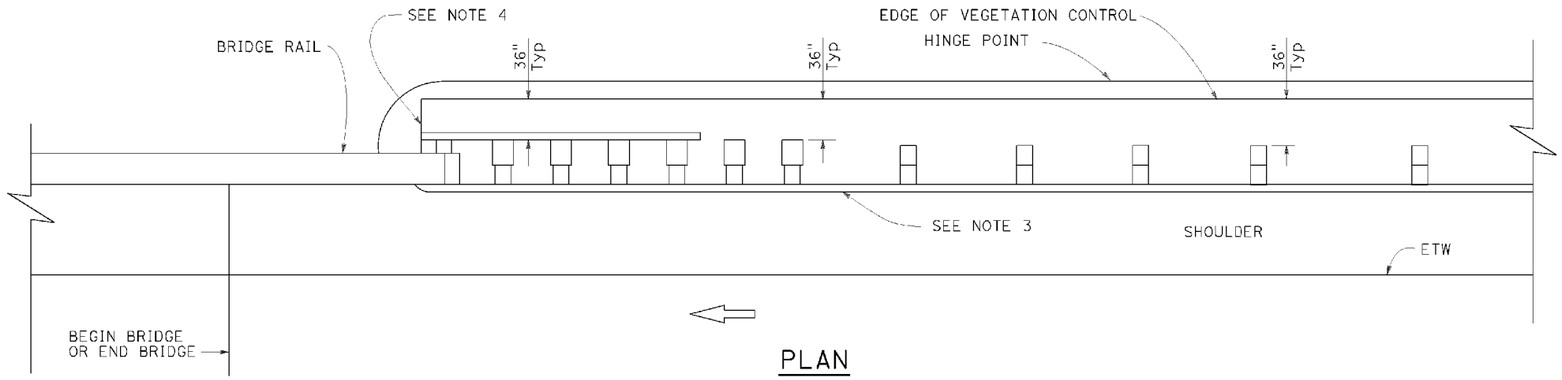


PLAN

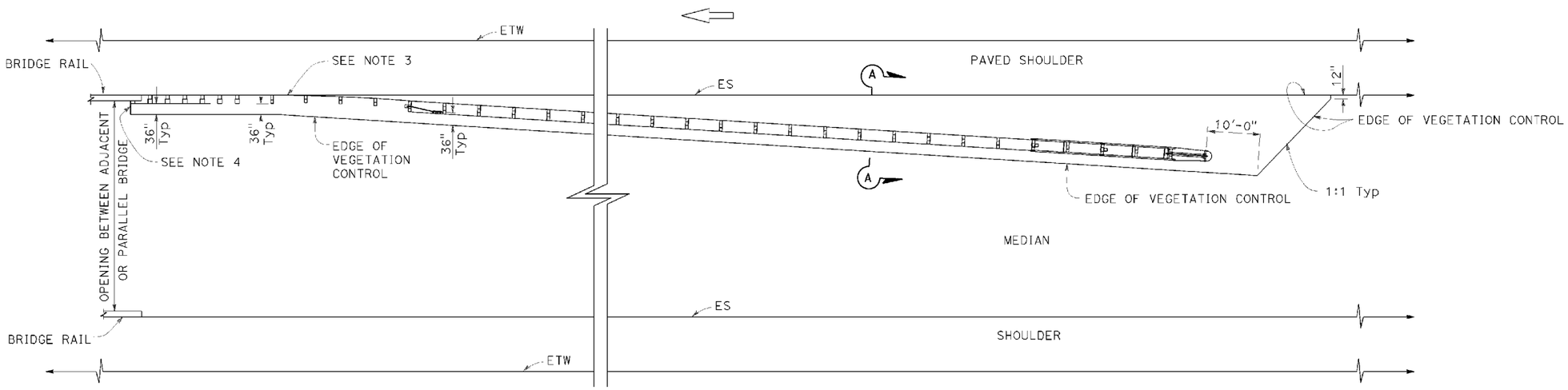


PLAN

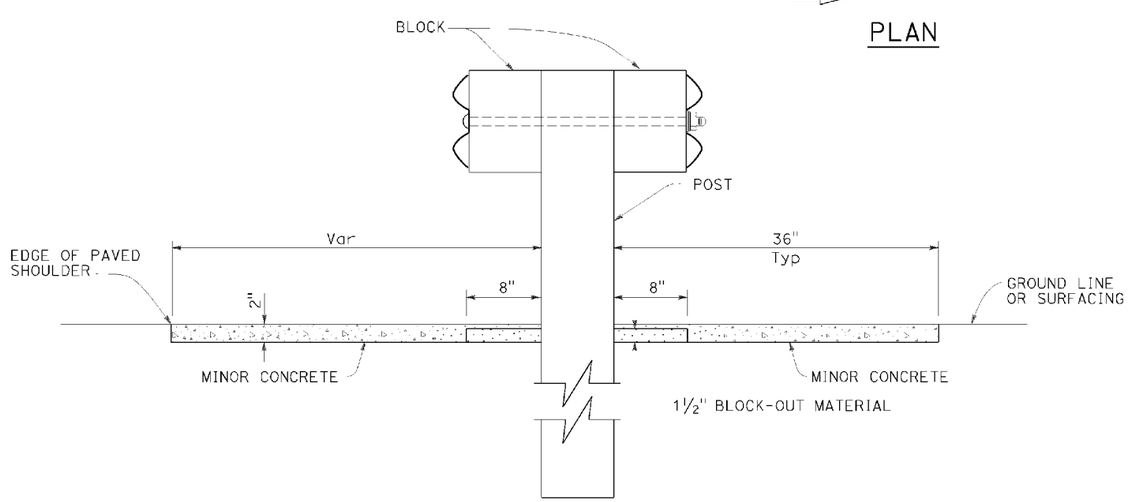


SECTION A-A

NOTES:

1. See Revised Standard Plan RSP A77N5 for additional vegetation control details.
2. Where the distance between back of post and hinge point is less than 42", construct vegetation control to 6" from hinge point while maintaining the 8" block-out at back of post. If the 8" block-out at back of post can not be maintained, construct vegetation control flush with the back edge of post.
3. Where dike is constructed under railing, construct vegetation control to back edge of dike. Where paved shoulder is constructed within 36" in front of the post, construct vegetation control to the edge of paved shoulder.
4. End vegetation control at end of backside rail element.

STATE OF CALIFORNIA
DEPARTMENT OF TRANSPORTATION

# MIDWEST GUARDRAIL SYSTEM TYPICAL VEGETATION CONTROL AT STRUCTURE APPROACH

NO SCALE

RSP A77N7 DATED JULY 19, 2013 SUPPLEMENTS THE STANDARD PLANS BOOK DATED 2010.

**REVISED STANDARD PLAN RSP A77N7**

**2010 REVISED STANDARD PLAN RSP A77N7**

P:\PROJ\01\41500\drafting\sheets\01130000127va016.dgn

8-12-13

| DIST | COUNTY | ROUTE | POST MILES TOTAL PROJECT | SHEET No. | TOTAL SHEETS |
|---|---|---|---|---|---|
| 01 | Hum | 101 | 109.5/R125.8 | 59 | 100 |

Randell D. Hiatt
REGISTERED CIVIL ENGINEER

July 19, 2013
PLANS APPROVAL DATE

REGISTERED PROFESSIONAL ENGINEER
Randell D. Hiatt
No. C50200
Exp. 6-30-15
CIVIL
STATE OF CALIFORNIA

THE STATE OF CALIFORNIA OR ITS OFFICERS OR AGENTS SHALL NOT BE RESPONSIBLE FOR THE ACCURACY OR COMPLETENESS OF SCANNED COPIES OF THIS PLAN SHEET.

TO ACCOMPANY PLANS DATED May 23, 2016

NOTES:

1. See Revised Standard Plan RSP A77N5 for additional vegetation control details.
2. Where the distance between back of post and hinge point is less than 42", construct vegetation control to 6" from hinge point while maintaining the 8" block-out at back of post. If the 8" block-out at back of post can not be maintained, construct vegetation control flush with the back edge of post.
3. Where dike is constructed under railing, construct vegetation control to back edge of dike. Where paved shoulder is constructed within 36" in front of the post, construct vegetation control to the edge of paved shoulder.

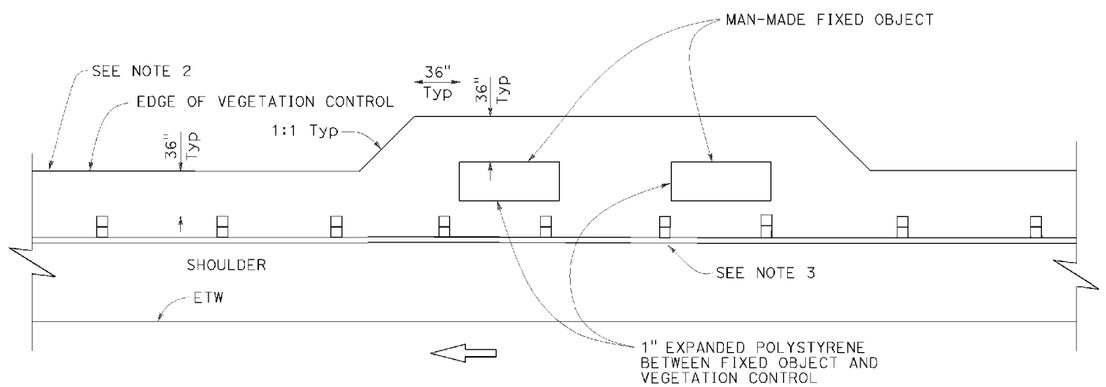


PLAN

Fixed object(s) on shoulder

STATE OF CALIFORNIA
DEPARTMENT OF TRANSPORTATION

# MIDWEST GUARDRAIL SYSTEM TYPICAL VEGETATION CONTROL AT FIXED OBJECT

NO SCALE

RSP A77N8 DATED JULY 19, 2013 SUPPLEMENTS THE STANDARD PLANS BOOK DATED 2010.

**REVISED STANDARD PLAN RSP A77N8**

2010 REVISED STANDARD PLAN RSP A77N8

P:\PROJ\01\41500\drafting\sheets\0113000127va017.dgn

6-12-13

| DIST | COUNTY | ROUTE | POST MILES TOTAL PROJECT | SHEET No. | TOTAL SHEETS |
|---|---|---|---|---|---|
| 01 | Hum | 101 | 109.5/R125.8 | 60 | 100 |

Randell D. Hiatt
REGISTERED CIVIL ENGINEER

November 15, 2013
PLANS APPROVAL DATE

REGISTERED PROFESSIONAL ENGINEER
Randell D. Hiatt
No. C50200
Exp. 6-30-15
CIVIL
STATE OF CALIFORNIA

THE STATE OF CALIFORNIA OR ITS OFFICERS OR AGENTS SHALL NOT BE RESPONSIBLE FOR THE ACCURACY OR COMPLETENESS OF SCANNED COPIES OF THIS PLAN SHEET.

TO ACCOMPANY PLANS DATED May 23, 2016

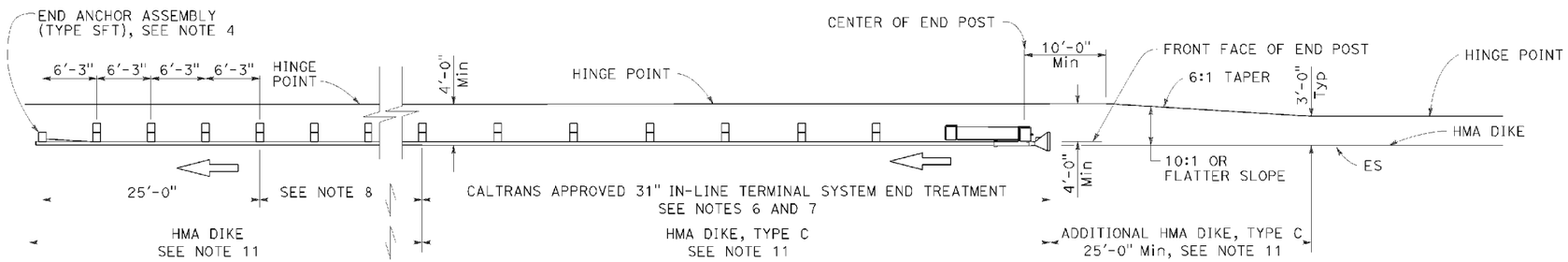


## TYPE 11A LAYOUT

(Embankment MGS installation with 31" in-line end treatment at traffic approach end of railing) see Note 5

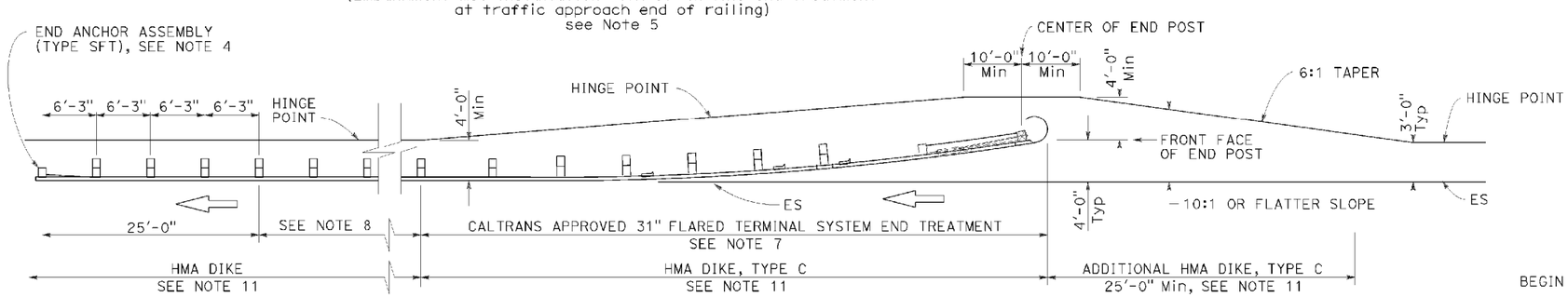


## TYPE 11B LAYOUT

(Embankment MGS installation with 31" flared end treatment at traffic approach end of railing) see Note 5

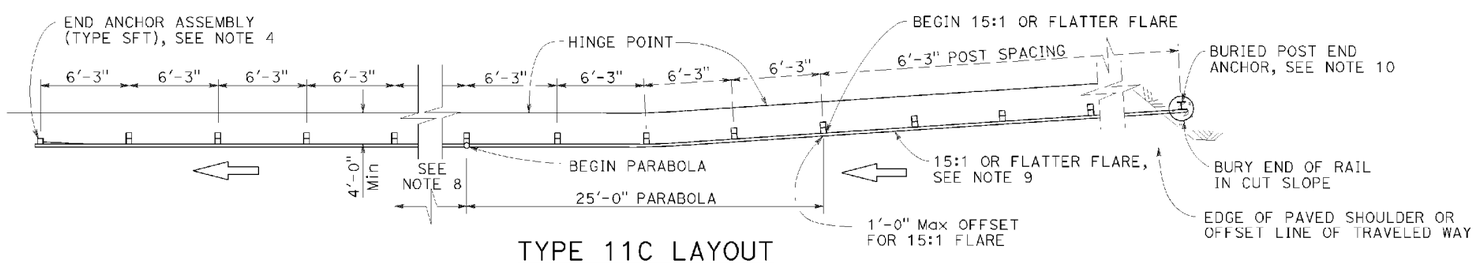


## TYPE 11C LAYOUT

(Embankment MGS installation with buried end anchor treatment at traffic approach end of railing) see Notes 5 and 11

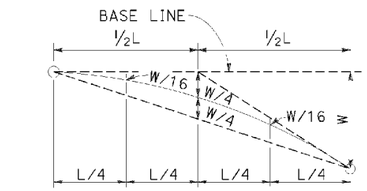


## TYPICAL PARABOLIC LAYOUT

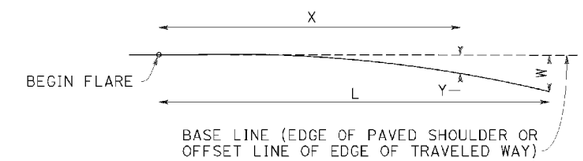


$$Y = \frac{WX^2}{L^2}$$

Y = OFFSET FROM BASE LINE
W = MAXIMUM OFFSET
X = DISTANCE ALONG BASE LINE
L = LENGTH OF FLARE

## PARABOLIC FLARE OFFSETS

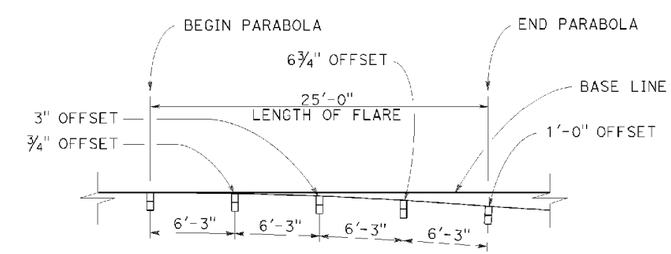


## TYPICAL FLARE OFFSETS FOR 1 FOOT Max END OFFSET

STATE OF CALIFORNIA
DEPARTMENT OF TRANSPORTATION

# MIDWEST GUARDRAIL SYSTEM TYPICAL LAYOUTS FOR EMBANKMENTS

NO SCALE

RSP A77P1 DATED NOVEMBER 15, 2013 SUPERSEDES RSP A77P1 DATED JULY 19, 2013 THAT SUPPLEMENTS THE STANDARD PLANS BOOK DATED 2010.

**REVISED STANDARD PLAN RSP A77P1**

**2010 REVISED STANDARD PLAN RSP A77P1**

NOTES:

1. Line post, blocks and hardware to be used are shown on Revised Standard Plans RSP A77L1, RSP A77L2, RSP A77M1, RSP A77N1 and RSP A77N2.
2. MGS post spacing to be 6'-3" center to center, except as otherwise noted.
3. Except as noted, line posts are 6" x 8" x 6'-0" wood with 6" x 12" x 1'-2" wood blocks. W6 x 8.5 or W6 x 9 steel posts, 6'-0" in length, with 6" x 12" x 1'-2" notched wood blocks or recycled plastic blocks may be used for 6" x 8" x 6'-0" wood post with 6" x 12" x 1'-2" wood blocks where applicable and when specified.
4. For End Anchor Assembly (Type SFT) details, see Revised Standard Plan RSP A77S1.
5. Layout Types 11A, 11B or 11C are typically used where MGS is recommended to shield embankment slopes and a crashworthy end treatment is required for only one direction of traffic.
6. 31" in-line terminal system end treatments are used where site conditions will not accommodate a flared end treatment.
7. The type of 31" terminal system end treatment to be used will be shown on the Project Plans.
8. Dependent on site conditions (embankment height and side slope), construction of additional MGS (length equal to multiples of 12'-6" with 6'-3" post spacing) may be advisable.
9. The 15:1 or flatter flare used with buried end anchors is based on the edge of the paved shoulder or offset line of edge of the traveled way. The length of MGS within the 15:1 or flatter flare is based on site conditions and should be a length equal to multiples of 12'-6".
10. For details of the buried post end anchor used with Type 11C Layout, see Revised Standard Plan RSP A77T2.
11. Where placement of dike is required with MGS installations, see Revised Standard Plan RSP A77N4 for dike positioning details.

P:\PROJ\01\41500\drafting\sheets\0113000127va018.dgn

10-4-13

| DIST | COUNTY | ROUTE | POST MILES TOTAL PROJECT | SHEET No. | TOTAL SHEETS |
|---|---|---|---|---|---|
| 01 | Hum | 101 | 109.5/R125.8 | 61 | 100 |

Randell D. Hiatt
REGISTERED CIVIL ENGINEER

July 19, 2013
PLANS APPROVAL DATE

REGISTERED PROFESSIONAL ENGINEER
Randell D. Hiatt
No. C50200
Exp. 6-30-15
CIVIL
STATE OF CALIFORNIA

*THE STATE OF CALIFORNIA OR ITS OFFICERS OR AGENTS SHALL NOT BE RESPONSIBLE FOR THE ACCURACY OR COMPLETENESS OF SCANNED COPIES OF THIS PLAN SHEET.*

TO ACCOMPANY PLANS DATED May 23, 2016

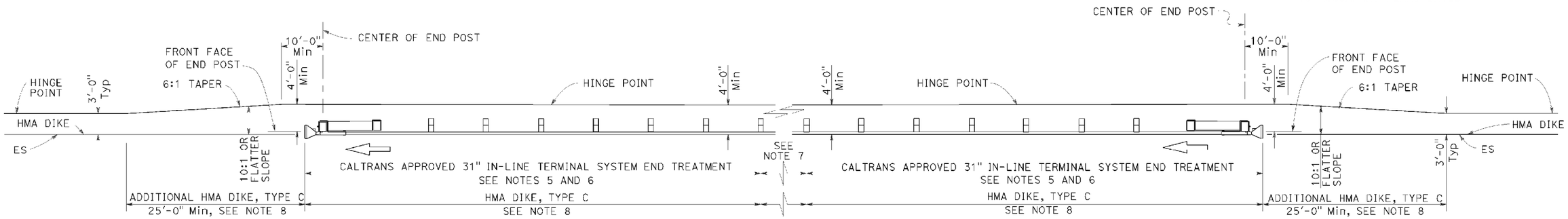


## TYPE 11D LAYOUT

(Embankment MGS installation with
31" in-line end treatment at each end of railing)
See Note 4

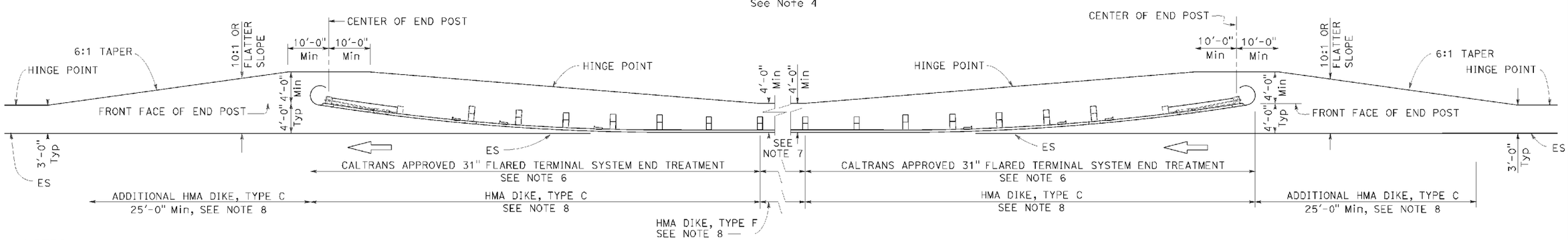


## TYPE 11E LAYOUT

(Embankment MGS installation with
31" flared end treatment at each end of railing)
See Note 4

### NOTES:

1. Line post, blocks and hardware to be used are shown on Revised Standard Plans RSP A77L1, RSP A77L2, RSP A77M1, RSP A77N1 and RSP A77N2.
2. MGS post spacing to be 6'-3" center to center, except as otherwise noted.
3. Except as noted, line posts are 6" x 8" x 6'-0" wood with 6" x 12" x 1'-2" wood blocks, W6 x 8.5 or W6 x 9 steel posts, 6'-0" in length, with 6" x 12" x 1'-2" notched wood blocks or plastic blocks may be used for 6" x 8" x 6'-0" wood post with 6" x 12" x 1'-2" wood blocks where applicable and when specified.
4. Layout Types 11D through 11L, shown on the A77P Series of Standard Plans, are typically used where MGS is recommended to shield embankment slopes and a crashworthy 31" end treatment is required for both directions of traffic.
5. 31" in-line terminal system end treatments are used where site conditions will not accommodate a flared end treatment.
6. The type of 31" terminal system end treatment to be used will be shown on the Project Plans.
7. Dependent on site conditions (embankment height and side slope), construction of additional MGS (length equal to multiples of 12'-6" with 6'-3" post spacing) may be advisable.
8. Where placement of dike is required with MGS installations, see Revised Standard Plan RSP A77N4 for dike positioning details.

STATE OF CALIFORNIA
DEPARTMENT OF TRANSPORTATION

# MIDWEST GUARDRAIL SYSTEM TYPICAL LAYOUTS FOR EMBANKMENTS

NO SCALE

RSP A77P2 DATED JULY 19, 2013 SUPPLEMENTS THE STANDARD PLANS BOOK DATED 2010.

**REVISED STANDARD PLAN RSP A77P2**

**2010 REVISED STANDARD PLAN RSP A77P2**

P:\PROJ\01\41500\drafting\sheets\0113000127va019.dgn

8-19-13

| DIST | COUNTY | ROUTE | POST MILES TOTAL PROJECT | SHEET No. | TOTAL SHEETS |
|---|---|---|---|---|---|
| 01 | Hum | 101 | 109.5/R125.8 | 62 | 100 |

Randell D. Hiatt
REGISTERED CIVIL ENGINEER

July 19, 2013
PLANS APPROVAL DATE

REGISTERED PROFESSIONAL ENGINEER Randell D. Hiatt No. C50200 Exp. 6-30-15 CIVIL STATE OF CALIFORNIA

THE STATE OF CALIFORNIA OR ITS OFFICERS OR AGENTS SHALL NOT BE RESPONSIBLE FOR THE ACCURACY OR COMPLETENESS OF SCANNED COPIES OF THIS PLAN SHEET.

TO ACCOMPANY PLANS DATED May 23, 2016

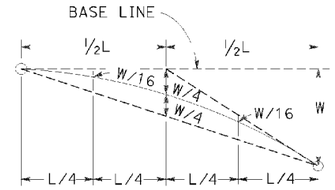


TYPICAL PARABOLIC LAYOUT

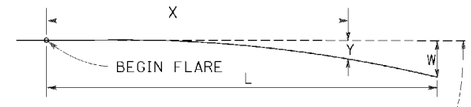


BASE LINE (EDGE OF PAVED SHOULDER OR OFFSET LINE OF EDGE OF TRAVELED WAY)

$$Y = \frac{WX^2}{L^2}$$

Y = OFFSET FROM BASE LINE
W = MAXIMUM OFFSET
X = DISTANCE ALONG BASE LINE
L = LENGTH OF FLARE

PARABOLIC FLARE OFFSETS

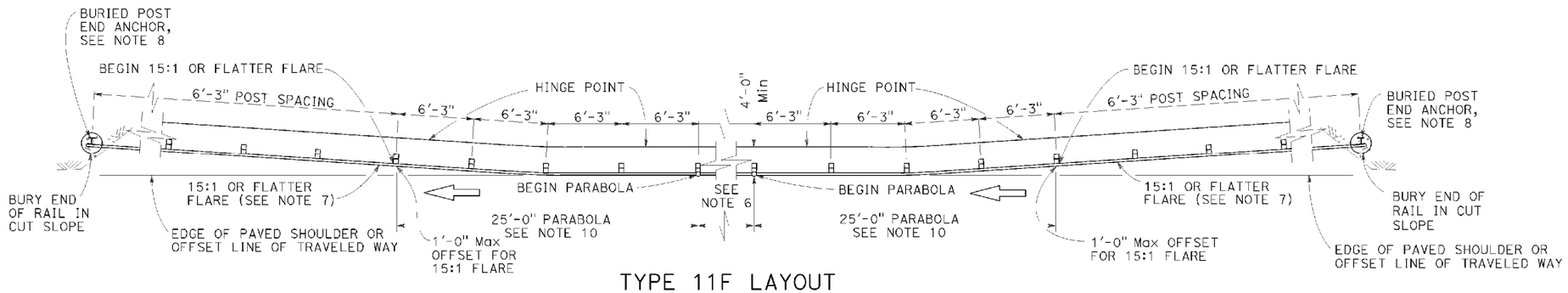


TYPE 11F LAYOUT

(Embankment MGS installation with a buried end anchor treatment at each end of railing)
See Notes 4 and 9

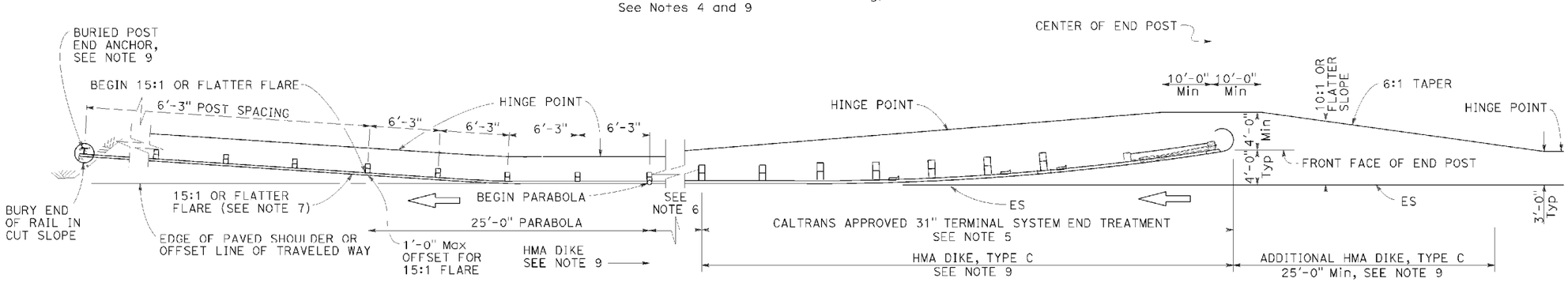


TYPE 11G LAYOUT

(Embankment MGS installation with 31" flared end treatment and a buried end anchor treatment at the ends of railing)
See Notes 4 and 9

## NOTES:

1. Line post, blocks and hardware to be used are shown on Revised Standard Plans RSP A77L1, RSP A77L2, RSP A77M1, RSP A77N1 and RSP A77N2.
2. MGS post spacing to be 6'-3" center to center, except as otherwise noted.
3. Except as noted, line posts are 6" x 8" x 6'-0" wood with 6" x 12" x 1'-2" wood blocks. W6 x 8.5 or W6 x 9 steel posts, 6'-0" in length, with 6" x 12" x 1'-2" notched wood blocks or plastic blocks may be used for 6" x 8" x 6'-0" wood post with 6" x 12" x 1'-2" wood blocks where applicable and when specified.
4. Layout Types 11D through 11L, shown on the A77P Series of Standard Plans, are typically used where MGS is recommended to shield embankment slopes and a crashworthy 31" end treatment is required for both directions of traffic.
5. The type of 31" terminal system end treatment to be used will be shown on the Project Plans.
6. Dependent on site conditions (embankment height and side slope), construction of additional MGS (length equal to multiples of 12'-6" with 6'-3" post spacing) may be advisable.
7. The 15:1 or flatter flare used with buried end anchors is based on the edge of the paved shoulder or offset line of edge of the traveled way. The length of MGS within the 15:1 or flatter flare is based on site conditions and should be a length equal to multiples of 12'-6".
8. For details of the buried post end anchor used with Type 11F and 11G Layouts, see Revised Standard Plan RSP A77T2.
9. Where placement of dike is required with MGS installations, see Revised Standard Plan RSP A77N4 for dike positioning details.
10. For typical flare offsets for 25'-0" length parabola with maximum offset of 1'-0", see Revised Standard Plan RSP A77P1.

STATE OF CALIFORNIA
DEPARTMENT OF TRANSPORTATION

# MIDWEST GUARDRAIL SYSTEM TYPICAL LAYOUTS FOR EMBANKMENTS

NO SCALE

RSP A77P3 DATED JULY 19, 2013 SUPPLEMENTS THE STANDARD PLANS BOOK DATED 2010.

**REVISED STANDARD PLAN RSP A77P3**

2010 REVISED STANDARD PLAN RSP A77P3

P:\PROJ\01\41500\drafting\sheets\01130001 27va020.dgn

6-19-13

| DIST | COUNTY | ROUTE | POST MILES TOTAL PROJECT | SHEET No. | TOTAL SHEETS |
|---|---|---|---|---|---|
| 01 | Hum | 101 | 109.5/R125.8 | 63 | 100 |

Randell D. Hiatt
REGISTERED CIVIL ENGINEER

July 19, 2013
PLANS APPROVAL DATE

REGISTERED PROFESSIONAL ENGINEER
Randell D. Hiatt
No. C50200
Exp. 6-30-15
CIVIL
STATE OF CALIFORNIA

THE STATE OF CALIFORNIA OR ITS OFFICERS OR AGENTS SHALL NOT BE RESPONSIBLE FOR THE ACCURACY OR COMPLETENESS OF SCANNED COPIES OF THIS PLAN SHEET.

TO ACCOMPANY PLANS DATED May 23, 2016

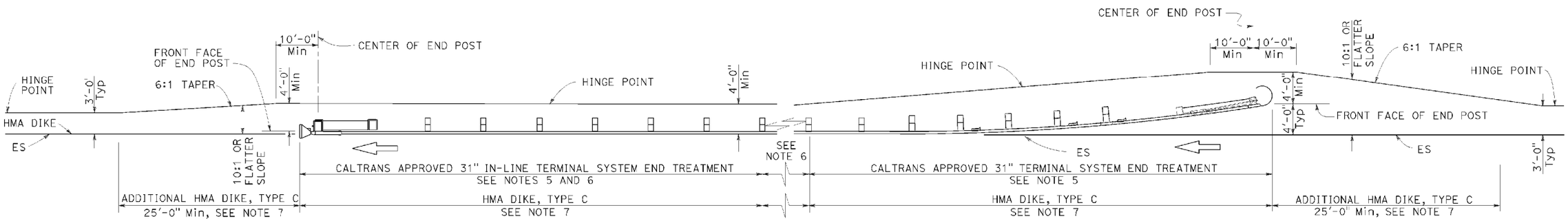


## TYPE 11H LAYOUT

(Embankment MGS installation with 31" flared end treatment
and 31" in-line treatment at the ends of railing)
See Notes 4 and 7

NOTES:

1. Line post, blocks and hardware to be used are shown on Revised Standard Plans RSP A77L1, RSP A77L2, RSP A77M1, RSP A77N1 and RSP A77N2.
2. MGS post spacing to be 6'-3" center to center, except as otherwise noted.
3. Except as noted, line posts are 6" x 8" x 6'-0" wood with 6" x 12" x 1'-2" wood blocks. W6 x 8.5 or W6 x 9 steel posts, 6'-0" in length, with 6" x 12" x 1'-2" notched wood blocks or plastic blocks may be used for 6" x 8" x 6'-0" wood post with 6" x 12" x 1'-2" wood blocks where applicable and when specified.
4. Layout Types 11D through 11L, shown on the A77P Series of Standard Plans, are typically used where MGS is recommended to shield embankment slopes and a crashworthy 31" end treatment is required for both directions of traffic.
5. The type of 31" terminal system end treatment to be used will be shown on the Project Plans.
6. Dependent on site conditions (embankment height and side slope), construction of additional MGS (length equal to multiples of 12'-6" with 6'-3" post spacing) may be advisable.
7. Where placement of dike is required with MGS installations, see Revised Standard Plan RSP A77N4 for dike positioning details.

STATE OF CALIFORNIA
DEPARTMENT OF TRANSPORTATION

# MIDWEST GUARDRAIL SYSTEM TYPICAL LAYOUTS FOR EMBANKMENTS

NO SCALE

RSP A77P4 DATED JULY 19, 2013 SUPPLEMENTS THE STANDARD PLANS BOOK DATED 2010.

**REVISED STANDARD PLAN RSP A77P4**

**2010 REVISED STANDARD PLAN RSP A77P4**

P:\PROJ\01\41500\drafting\sheets\0113000127va021.dgn

8-19-13

| DIST | COUNTY | ROUTE | POST MILES TOTAL PROJECT | SHEET No. | TOTAL SHEETS |
|---|---|---|---|---|---|
| 01 | Hum | 101 | 109.5/R125.8 | 64 | 100 |

Randell D. Hiatt
REGISTERED CIVIL ENGINEER

July 19, 2013
PLANS APPROVAL DATE

Randell D. Hiatt
No. C50200
Exp. 6-30-15
CIVIL
STATE OF CALIFORNIA
REGISTERED PROFESSIONAL ENGINEER

THE STATE OF CALIFORNIA OR ITS OFFICERS OR AGENTS SHALL NOT BE RESPONSIBLE FOR THE ACCURACY OR COMPLETENESS OF SCANNED COPIES OF THIS PLAN SHEET.

TO ACCOMPANY PLANS DATED May 23, 2016

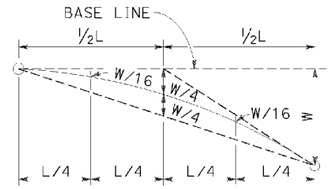


TYPICAL PARABOLIC LAYOUT

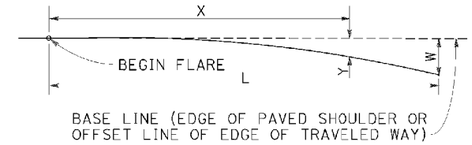


BASE LINE (EDGE OF PAVED SHOULDER OR OFFSET LINE OF EDGE OF TRAVELED WAY)

$$Y = \frac{WX^2}{L^2}$$

Y = OFFSET FROM BASE LINE
W = MAXIMUM OFFSET
X = DISTANCE ALONG BASE LINE
L = LENGTH OF FLARE

PARABOLIC FLARE OFFSETS

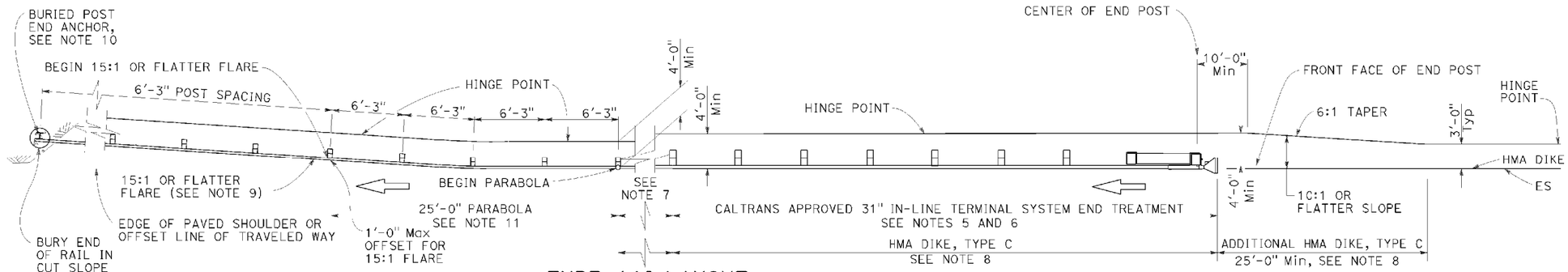


TYPE 11I LAYOUT

(Embankment MGS installation with 31" in-line end treatment and a buried end anchor treatment at the ends of railing)
See Note 4

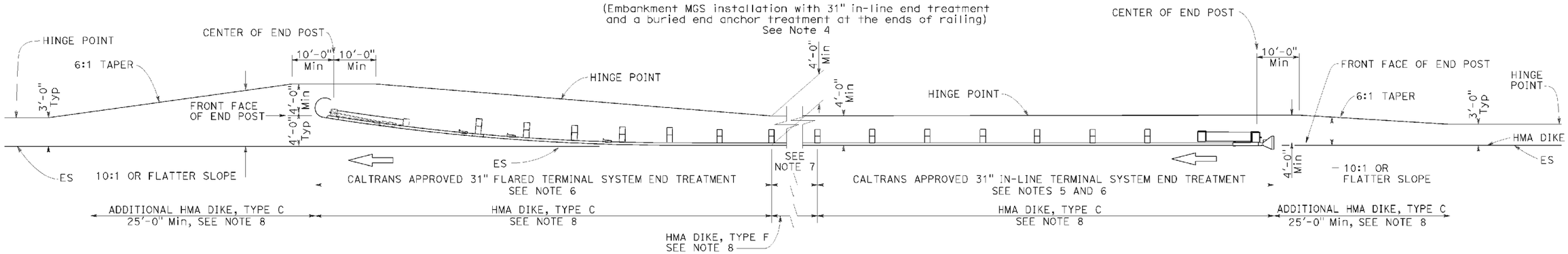


TYPE 11J LAYOUT

(Embankment MGS installation with 31" in-line end treatment and 31" flared end treatment at the ends of railing)
See Note 4

## NOTES:

1. Line post, blocks and hardware to be used are shown on Revised Standard Plans RSP A77L1, RSP A77L2, RSP A77M1, RSP A77N1 and RSP A77N2.
2. MGS post spacing to be 6'-3" center to center, except as otherwise noted.
3. Except as noted, line posts are 6" x 8" x 6'-0" wood with 6" x 12" x 1'-2" wood blocks. W6 x 8.5 or W6 x 9 steel posts, 6'-0" in length, with 6" x 12" x 1'-2" notched wood blocks or plastic blocks may be used for 6" x 8" x 6'-0" wood post with 6" x 12" x 1'-2" wood blocks where applicable and when specified.
4. Layout Types 11D through 11L, shown on the A77P Series of Standard Plans, are typically used where MGS is recommended to shield embamkment slopes and a crashworthy 31" end treatment is required for both directions of traffic.
5. 31" in-line terminal system end treatments are used where site conditions will not accommodate a 31" flared end treatment.
6. The type of 31" terminal system end treatment to be used will be shown on the Project Plans.
7. Dependent on site conditions (embankment height and side slope), construction of additional MGS (length equal to multiples of 12'-6" with 6'-3" post spacing) may be advisable.
8. Where placement of dike is required with MGS installations, see Revised Standard Plan RSP A77N4 for dike positioning details.
9. The 15:1 or flatter flare used with buried end anchors is based on the edge of the paved shoulder or offset line of edge of the traveled way. The length of MGS within the 15:1 or flatter flare is based on site conditions and should be a length equal to multiples of 12'-6".
10. For details of the buried post end anchor used with Type 11I Layout, see Revised Standard Plan RSP A77T2.
11. For typical flare offsets for 25'-0" length parabola with maximum offset of 1'-0", see Revised Standard Plan RSP A77P1.

STATE OF CALIFORNIA
DEPARTMENT OF TRANSPORTATION

# MIDWEST GUARDRAIL SYSTEM TYPICAL LAYOUTS FOR EMBANKMENTS

NO SCALE

RSP A77P5 DATED JULY 19, 2013 SUPPLEMENTS THE STANDARD PLANS BOOK DATED 2010.

**REVISED STANDARD PLAN RSP A77P5**

2010 REVISED STANDARD PLAN RSP A77P5

P:\PROJ\01\41500\drafting\sheets\0113000127va022.dgn

6-19-13

| DIST | COUNTY | ROUTE | POST MILES TOTAL PROJECT | SHEET No. | TOTAL SHEETS |
|---|---|---|---|---|---|
| 01 | Hum | 101 | 109.5/R125.8 | 65 | 100 |

Randell D. Hiatt
REGISTERED CIVIL ENGINEER

July 19, 2013
PLANS APPROVAL DATE

Randell D. Hiatt
No. C50200
Exp. 6-30-15
CIVIL
STATE OF CALIFORNIA
REGISTERED PROFESSIONAL ENGINEER

THE STATE OF CALIFORNIA OR ITS OFFICERS OR AGENTS SHALL NOT BE RESPONSIBLE FOR THE ACCURACY OR COMPLETENESS OF SCANNED COPIES OF THIS PLAN SHEET.

TO ACCOMPANY PLANS DATED May 23, 2016

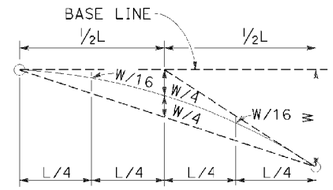


TYPICAL PARABOLIC LAYOUT

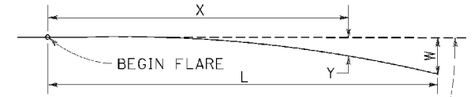


BASE LINE (EDGE OF PAVED SHOULDER OR OFFSET LINE OF EDGE OF TRAVELED WAY)

$$Y = \frac{WX^2}{L^2}$$

Y = OFFSET FROM BASE LINE
W = MAXIMUM OFFSET
X = DISTANCE ALONG BASE LINE
L = LENGTH OF FLARE

PARABOLIC FLARE OFFSETS

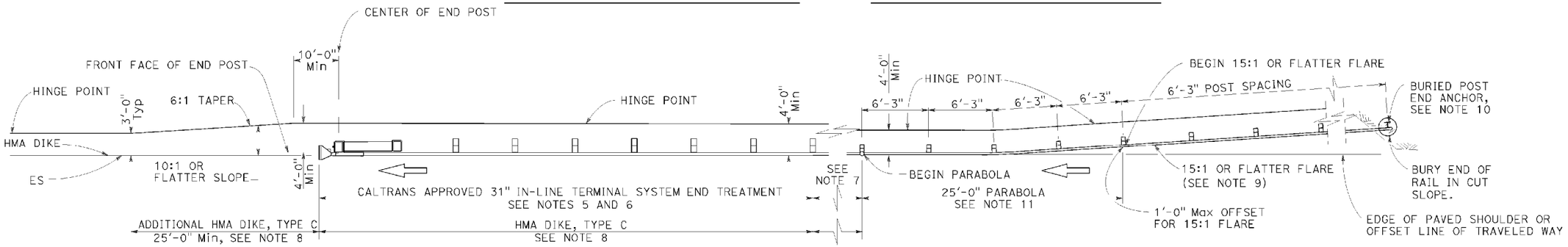


TYPE 11K LAYOUT

(Embankment MGS installation with a buried end anchor treatment and a 31" in-line end treatment at the ends of railing)
See Note 4

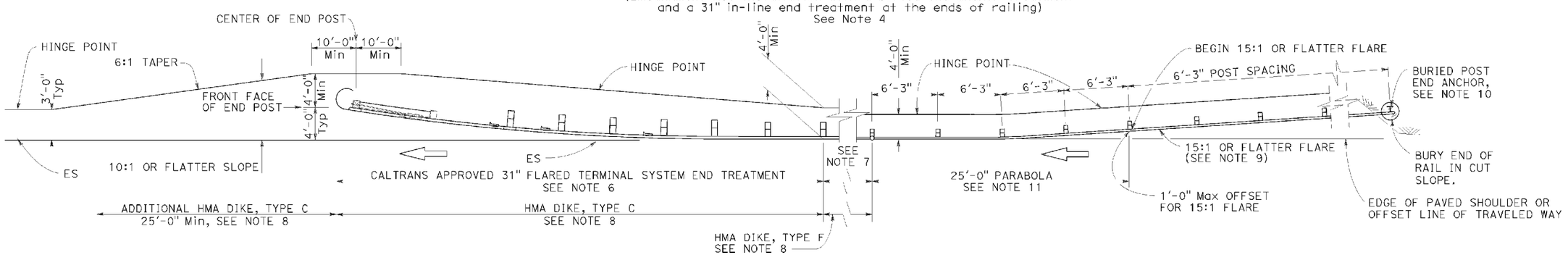


TYPE 11L LAYOUT

(Embankment MGS installation with a buried end anchor treatment and a 31" flared end treatment at the ends of railing)
See Note 4

## NOTES:

1. Line post, blocks and hardware to be used are shown on Revised Standard Plans RSP A77L1, RSP A77L2, RSP A77M1, RSP A77N1 and RSP A77N2.
2. MGS post spacing to be 6'-3" center to center, except as otherwise noted.
3. Except as noted, line posts are 6" x 8" x 6'-0" wood with 6" x 12" x 1'-2" wood blocks. W6 x 8.5 or W6 x 9 steel posts, 6'-0" in length, with 6" x 12" x 1'-2" notched wood blocks or plastic blocks may be used for 6" x 8" x 6'-0" wood post with 6" x 12" x 1'-2" wood blocks where applicable and when specified.
4. Layout Types 11D through 11L, shown on the A77P Series of Standard Plans, are typically used where MGS is recommended to shield embamkment slopes and a crashworthy 31" end treatment is required for both directions of traffic.
5. 31" in-line terminal system end treatments are used where site conditions will not accommodate a 31" flared end treatment.
6. The type of 31" terminal system end treatment to be used will be shown on the Project Plans.
7. Dependent on site conditions (embankment height and side slope), construction of additional MGS (length equal to multiples of 12'-6" with 6'-3" post spacing) may be advisable.
8. Where placement of dike is required with MGS installations, see Revised Standard Plan RSP A77N4 for dike positioning details.
9. The 15:1 or flatter flare used with buried end anchors is based on the edge of the paved shoulder or offset line of edge of the traveled way. The length of MGS within the 15:1 or flatter flare is based on site conditions and should be a length equal to multiples of 12'-6".
10. For details of the buried post end anchor used with Type 11K and 11L Layouts, see Revised Standard Plan RSP A77T2.
11. For typical flare offsets for 25'-0" length parabola with maximum offset of 1'-0", see Revised Standard Plan RSP A77P1.

STATE OF CALIFORNIA
DEPARTMENT OF TRANSPORTATION

# MIDWEST GUARDRAIL SYSTEM TYPICAL LAYOUTS FOR EMBANKMENTS

NO SCALE

RSP A77P6 DATED JULY 19, 2013 SUPPLEMENTS THE STANDARD PLANS BOOK DATED 2010.

**REVISED STANDARD PLAN RSP A77P6**

**2010 REVISED STANDARD PLAN RSP A77P6**

P:\PROJ\01\41500\drafting\sheets\0113000127va023.dgn

6-19-13

| DIST | COUNTY | ROUTE | POST MILES TOTAL PROJECT | SHEET No. | TOTAL SHEETS |
|---|---|---|---|---|---|
| 01 | Hum | 101 | 109.5/R125.8 | 66 | 100 |

Randell D. Hiatt
REGISTERED CIVIL ENGINEER

August 14, 2015
PLANS APPROVAL DATE

REGISTERED PROFESSIONAL ENGINEER Randell D. Hiatt No. C50200 Exp. 6-30-17 CIVIL STATE OF CALIFORNIA

THE STATE OF CALIFORNIA OR ITS OFFICERS OR AGENTS SHALL NOT BE RESPONSIBLE FOR THE ACCURACY OR COMPLETENESS OF SCANNED COPIES OF THIS PLAN SHEET.

TO ACCOMPANY PLANS DATED May 23, 2016

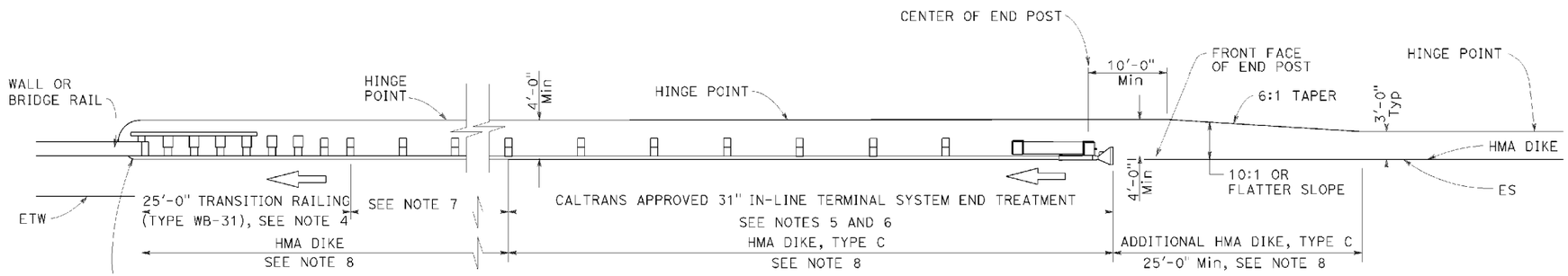


## TYPE 12A LAYOUT

(MGS installation at structure approach with
31" In-line end treatment at traffic approach end of railing)
See Note 9

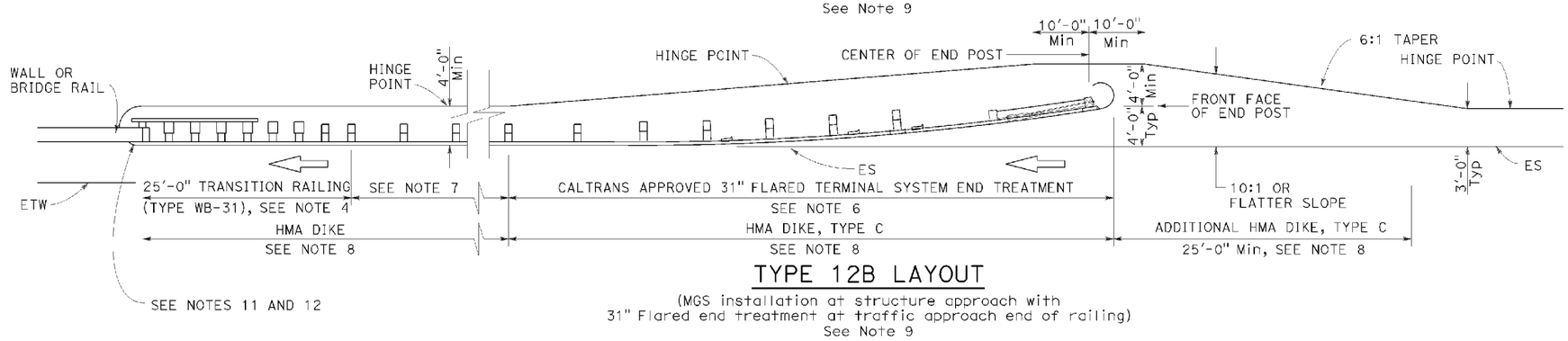


## TYPE 12B LAYOUT

(MGS installation at structure approach with
31" Flared end treatment at traffic approach end of railing)
See Note 9

## NOTES:

1. Line post, blocks and hardware to be used are shown on Revised Standard Plans RSP A77L1, RSP A77L2, RSP A77M1, RSP A77N1 and RSP A77N2.
2. MGS post spacing to be 6'-3" center to center, except as otherwise noted.
3. Except as noted, line posts are 6" x 8" x 6'-0" wood with 6" x 12" x 1'-2" wood blocks. W6 x 8.5 or W6 x 9 steel posts, 6'-0" in length, with 6" x 12" x 1'-2" notched wood blocks or plastic blocks may be used for 6" x 8" x 6'-0" wood posts with 6" x 12" x 1'-2" wood blocks where applicable and when specified.
4. For Transition Railing (Type WB-31) details for Types 12A and 12B Layouts, see Revised Standard Plan RSP A77U4.
5. 31" in-line terminal system end treatments are used where site conditions will not accommodate a 31" flared end treatment.
6. The type of 31" terminal system end treatment to be used will be shown on the Project Plans.
7. Dependent on site conditions (embankment height, side slopes, or other fixed objects), it may be advisable to construct additional guard railing (a length equal to multiples of 12'-6" with 6'-3" post spacing) between the transition railing and end treatment. A 12.5 degree angle of departure can be drawn on the Project Plans from the edge of traveled way through the outer most point of the fixed object to determine the additional length of railing needed.
8. Where placement of dike is required with guard railing installations, see Revised Standard Plan RSP A77N4 for dike positioning details.
9. Type 12A or Type 12B Layouts are typically used:
   a. To the right of approaching traffic, at the end of a structure, on two-lane conventional highway where the roadbed width across the structure is less than 40 feet.
   b. To the left of approaching traffic, at the end of a structure, on two-lane conventional highway where the roadbed width across the structure is less than 40 feet.
   c. To the right of approaching traffic at the end of each structure on multilane freeways or expressways with separate adjacent or parallel bridges.
   d. To the right of approaching traffic at the end of the structure on multilane freeways or expressways with decked median on the bridge.
10. See Revised Standard Plan RSP A77Q3 for typical layout used left of approaching traffic at the ends of each structure on multilane freeways or expressways with separate adjacent or parallel bridges.
11. For additional details of typical connections to bridge rail, see Connection Detail AA on Revised Standard Plans RSP A77U1 and RSP A77U2 and Connection Detail FF on Revised Standard Plans RSP A77V1 and RSP A77V2.
12. For additional details of a typical connection to walls or abutments, see Revised Standard Plan RSP A77L3.

STATE OF CALIFORNIA
DEPARTMENT OF TRANSPORTATION

# MIDWEST GUARDRAIL SYSTEM TYPICAL LAYOUTS FOR STRUCTURE APPROACH

NO SCALE

RSP A77Q1 DATED AUGUST 14, 2015 SUPERSEDES RSP A77Q1 DATED JULY 19, 2013 THAT SUPPLEMENTS THE STANDARD PLANS BOOK DATED 2010.

**REVISED STANDARD PLAN RSP A77Q1**

**2010 REVISED STANDARD PLAN RSP A77Q1**

P:\PROJ\01\41500\drafting\sheets\0113000127va024.dgn

8-12-15

| DIST | COUNTY | ROUTE | POST MILES TOTAL PROJECT | SHEET NO. | TOTAL SHEETS |
|---|---|---|---|---|---|
| 01 | Hum | 101 | 109.5/R125.8 | 67 | 100 |

Randell D. Hiatt
REGISTERED CIVIL ENGINEER

August 14, 2015
PLANS APPROVAL DATE

REGISTERED PROFESSIONAL ENGINEER
Randell D. Hiatt
No. C50200
Exp. 6-30-17
CIVIL
STATE OF CALIFORNIA

*THE STATE OF CALIFORNIA OR ITS OFFICERS OR AGENTS SHALL NOT BE RESPONSIBLE FOR THE ACCURACY OR COMPLETENESS OF SCANNED COPIES OF THIS PLAN SHEET.*

TO ACCOMPANY PLANS DATED May 23, 2016

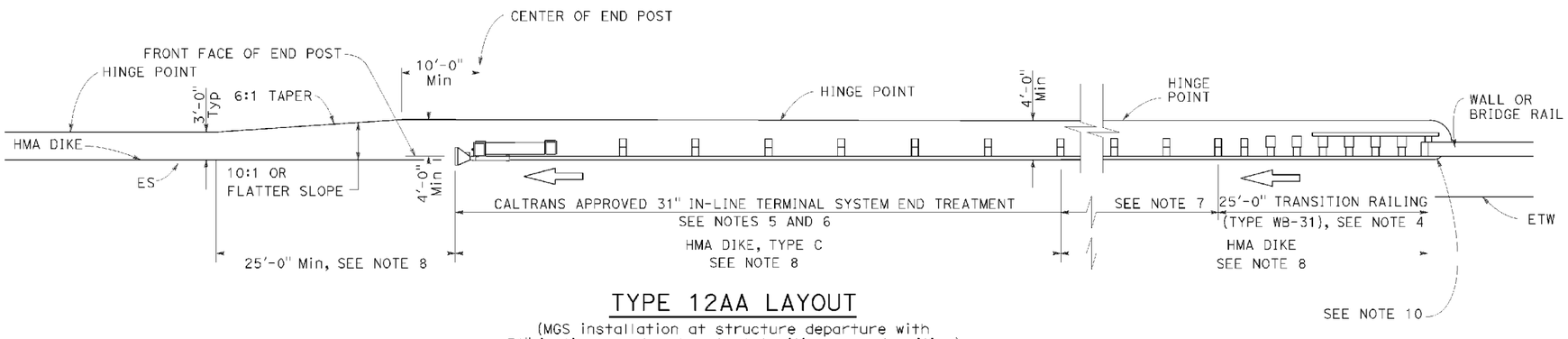


## TYPE 12AA LAYOUT

(MGS installation at structure departure with
31" in-line end treatment at trailing end of railing)
See Notes 8 and 9

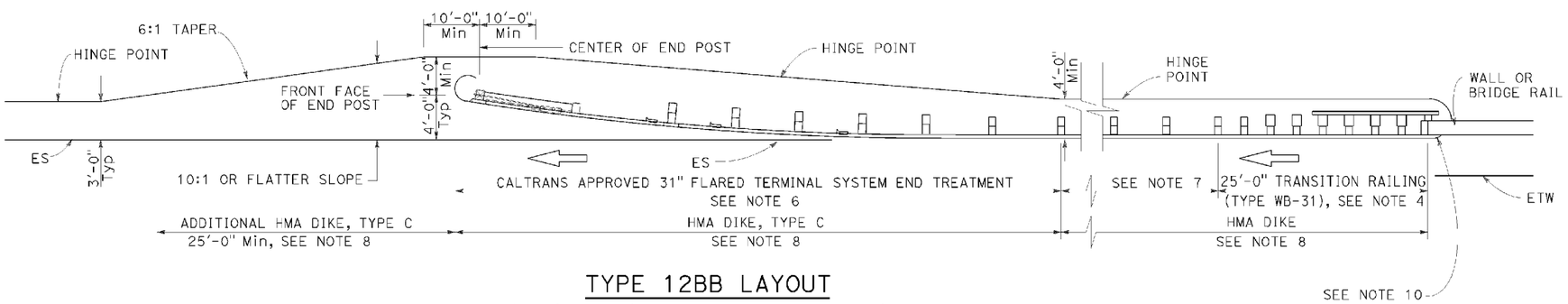


## TYPE 12BB LAYOUT

(MGS installation at structure departure with
31" flared end treatment at trailing end of railing)
See Notes 8 and 9

### NOTES:

1. Line post, blocks and hardware to be used are shown on Revised Standard Plans RSP A77L1, RSP A77L2, RSP A77M1, RSP A77N1 and RSP A77N2.
2. MGS post spacing to be 6'-3" center to center, except as otherwise noted.
3. Except as noted, line posts are 6" x 8" x 6'-0" wood with 6" x 12" x 1'-2" wood blocks. W6 x 8.5 or W6 x 9 steel posts, 6'-0" in length, with 6" x 12" x 1-2" notched wood blocks or notched recycled plastic blocks may be used for 6" x 8" x 6'-0" wood posts with 6" x 12" x 1'-2" wood blocks where applicable and when specified.
4. For Transition Railing (Type WB-31) details for Types 12AA and 12BB Layouts, see Revised Standard Plan RSP A77U4.
5. 31" in-line terminal system treatments are used where site conditions will not accommodate a 31" flared end treatment.
6. The type of 31" terminal system to be used will be shown on the Project Plans.
7. Dependent on site conditions (embankment height, side slopes, other fixed objects), it may be advisable to construct additional MGS (a length equal to multiples of 12'-6" with 6'-3" post spacing) between the transition railing and 31" end treatments.
8. Where placement of dike is required with MGS installations, see Revised Standard Plan RSP A77N4 for dike positioning details.
9. Type 12AA or Type 12BB Layouts are typically used to the right of traffic departing a structure on two-way conventional highways where the roadbed width across the structure is less than 40 feet.
10. For additional details of typical connections to bridge rail, see Connection Detail CC on Revised Standard Plan RSP A77U2 and Connection Detail HH on Revised Standard Plan RSP A77V2.

STATE OF CALIFORNIA
DEPARTMENT OF TRANSPORTATION

# MIDWEST GUARDRAIL SYSTEM TYPICAL LAYOUTS FOR STRUCTURE DEPARTURE

NO SCALE

RSP A77Q4 DATED AUGUST 14, 2015 SUPERSEDES RSP A77Q4 DATED JULY 19, 2013 THAT SUPPLEMENTS THE STANDARD PLANS BOOK DATED 2010.

**REVISED STANDARD PLAN RSP A77Q4**

**2010 REVISED STANDARD PLAN RSP A77Q4**

P:\PROJ\01\41500\drafting\sheets\0113000127va025.dgn

8-12-15

| DIST | COUNTY | ROUTE | POST MILES TOTAL PROJECT | SHEET No. | TOTAL SHEETS |
|---|---|---|---|---|---|
| 01 | Hum | 101 | 109.5/R125.8 | 68 | 100 |

Randell D. Hiatt
REGISTERED CIVIL ENGINEER

November 15, 2013
PLANS APPROVAL DATE

Randell D. Hiatt No. C50200 Exp. 6-30-15 CIVIL STATE OF CALIFORNIA REGISTERED PROFESSIONAL ENGINEER

THE STATE OF CALIFORNIA OR ITS OFFICERS OR AGENTS SHALL NOT BE RESPONSIBLE FOR THE ACCURACY OR COMPLETENESS OF SCANNED COPIES OF THIS PLAN SHEET.

TO ACCOMPANY PLANS DATED May 23, 2016

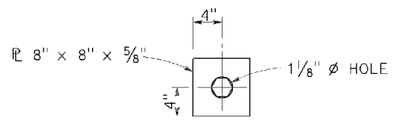


DETAIL "A"
CABLE CONNECTION
END PLATE

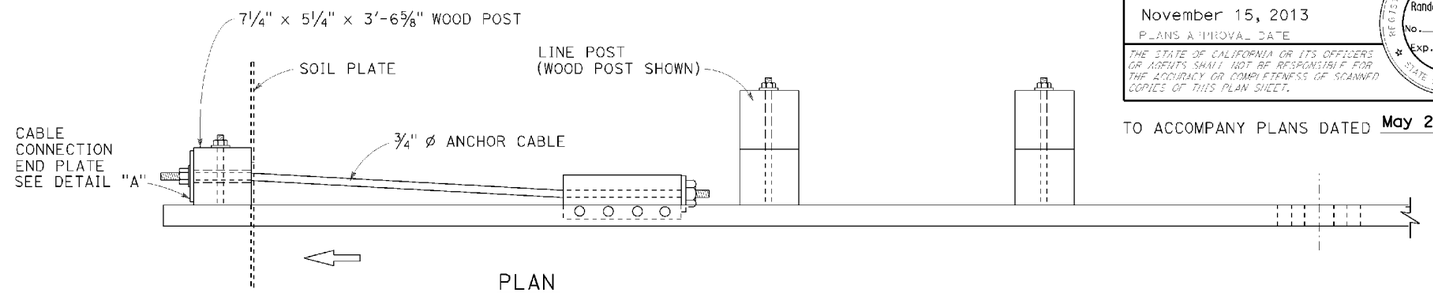


PLAN

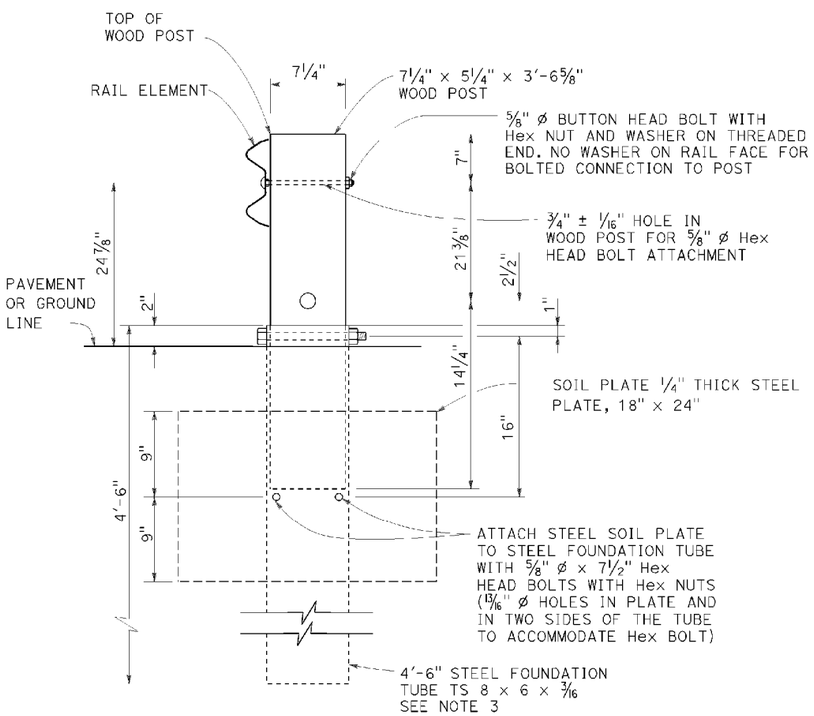


SECTION A-A

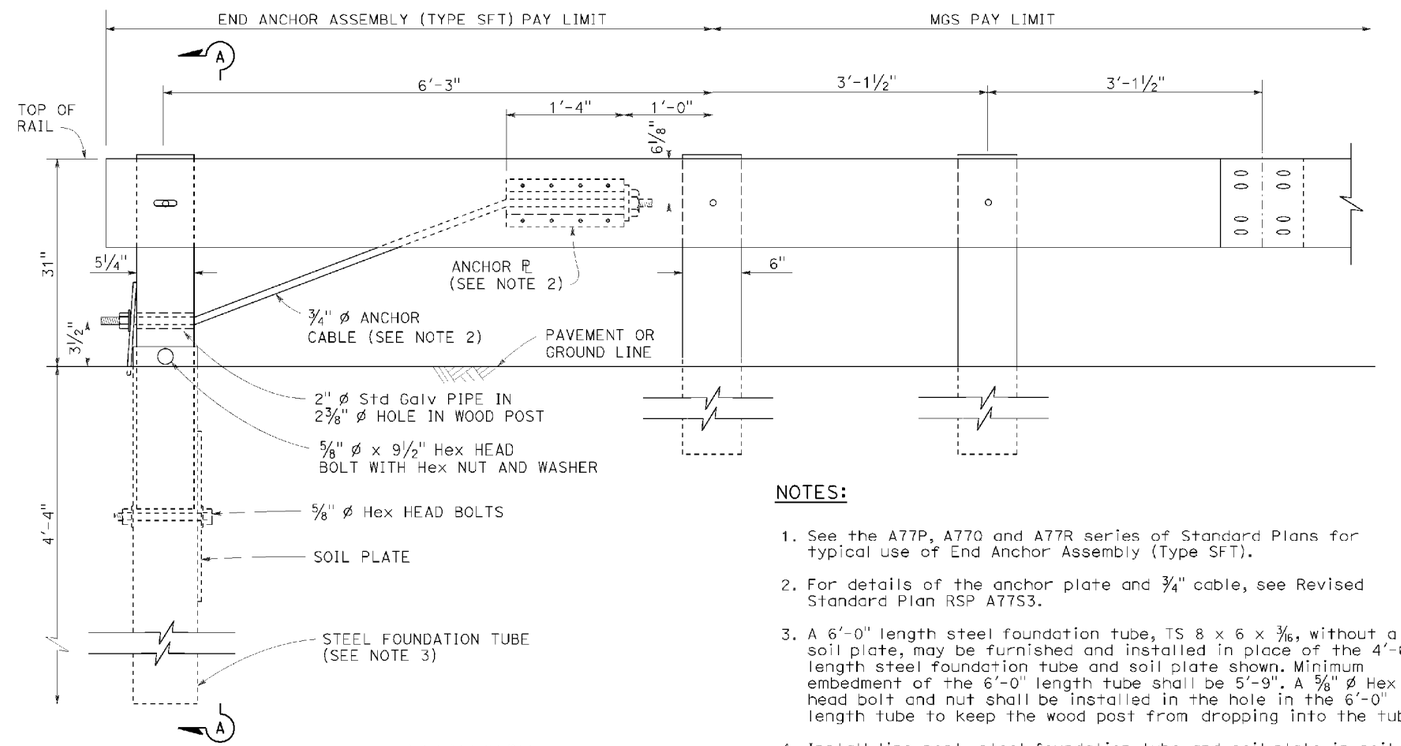


ELEVATION

END ANCHOR
ASSEMBLY (TYPE SFT)
See Note 1

NOTES:

1. See the A77P, A77Q and A77R series of Standard Plans for typical use of End Anchor Assembly (Type SFT).
2. For details of the anchor plate and 3/4" cable, see Revised Standard Plan RSP A77S3.
3. A 6'-0" length steel foundation tube, TS 8 × 6 × 3/16, without a soil plate, may be furnished and installed in place of the 4'-6" length steel foundation tube and soil plate shown. Minimum embedment of the 6'-0" length tube shall be 5'-9". A 5/8" ø Hex head bolt and nut shall be installed in the hole in the 6'-0" length tube to keep the wood post from dropping into the tube.
4. Install line post, steel foundation tube and soil plate in soil.

STATE OF CALIFORNIA
DEPARTMENT OF TRANSPORTATION

# MIDWEST GUARDRAIL SYSTEM END ANCHOR ASSEMBLY (TYPE SFT)

NO SCALE

RSP A77S1 DATED NOVEMBER 15, 2013 SUPERSEDES RSP A77S1
DATED JULY 19, 2013 THAT SUPPLEMENTS THE STANDARD PLANS BOOK DATED 2010.

**REVISED STANDARD PLAN RSP A77S1**

**2010 REVISED STANDARD PLAN RSP A77S1**

P:\PROJ\01\41500\drafting\sheets\0113000127va026.dgn

10-4-13

| DIST | COUNTY | ROUTE | POST MILES TOTAL PROJECT | SHEET No. | TOTAL SHEETS |
|---|---|---|---|---|---|
| 01 | Hum | 101 | 109.5/R125.8 | 69 | 100 |

Randell D. Hiatt
REGISTERED CIVIL ENGINEER

November 15, 2013
PLANS APPROVAL DATE

REGISTERED PROFESSIONAL ENGINEER
Randell D. Hiatt
No. C50200
Exp. 6-30-15
CIVIL
STATE OF CALIFORNIA

THE STATE OF CALIFORNIA OR ITS OFFICERS OR AGENTS SHALL NOT BE RESPONSIBLE FOR THE ACCURACY OR COMPLETENESS OF SCANNED COPIES OF THIS PLAN SHEET.

TO ACCOMPANY PLANS DATED May 23, 2016

NOTE:

See Revised Standard Plans RSP A77S1, RSP A77S2 and RSP A77T1 for typical use of anchor cable and anchor plate.

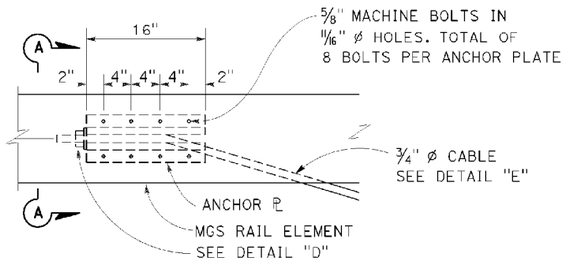


ANCHOR PLATE DETAIL
(MGS shown, TBB similar)

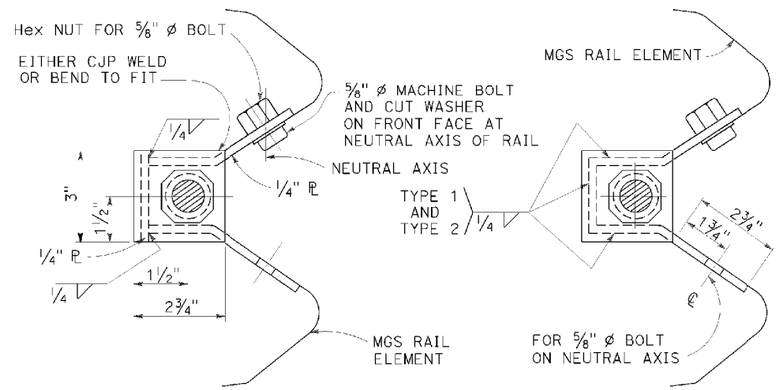


NOTE:
Dimensioning applies to both types.

SECTION A-A
(ALTERNATIVE TYPE 1)

SECTION A-A
(ALTERNATIVE TYPE 2)

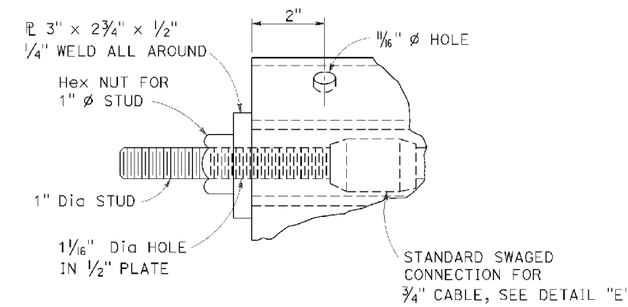


DETAIL "D"

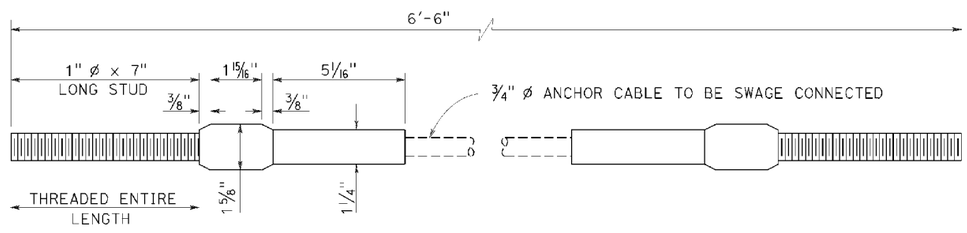


ANCHOR CABLE WITH
SWAGED FITTING AND STUD
DETAIL "E"

STATE OF CALIFORNIA
DEPARTMENT OF TRANSPORTATION

# METAL RAILING ANCHOR CABLE AND ANCHOR PLATE DETAILS

NO SCALE

RSP A77S3 DATED NOVEMBER 15, 2013 SUPERSEDES RSP A77S3 DATED JULY 19, 2013 THAT SUPPLEMENTS THE STANDARD PLANS BOOK DATED 2010.

**REVISED STANDARD PLAN RSP A77S3**

**2010 REVISED STANDARD PLAN RSP A77S3**

P:\PROJ\01\41500\drafting\sheets\0113000127va027.dgn

10-4-13

| DIST | COUNTY | ROUTE | POST MILES TOTAL PROJECT | SHEET No. | TOTAL SHEETS |
|---|---|---|---|---|---|
| 01 | Hum | 101 | 109.5/R125.8 | 70 | 100 |

Randell D. Hiatt
REGISTERED CIVIL ENGINEER

November 15, 2013
PLANS APPROVAL DATE

REGISTERED PROFESSIONAL ENGINEER
Randell D. Hiatt
No. C50200
Exp. 6-30-15
CIVIL
STATE OF CALIFORNIA

THE STATE OF CALIFORNIA OR ITS OFFICERS OR AGENTS SHALL NOT BE RESPONSIBLE FOR THE ACCURACY OR COMPLETENESS OF SCANNED COPIES OF THIS PLAN SHEET.

TO ACCOMPANY PLANS DATED May 23, 2016

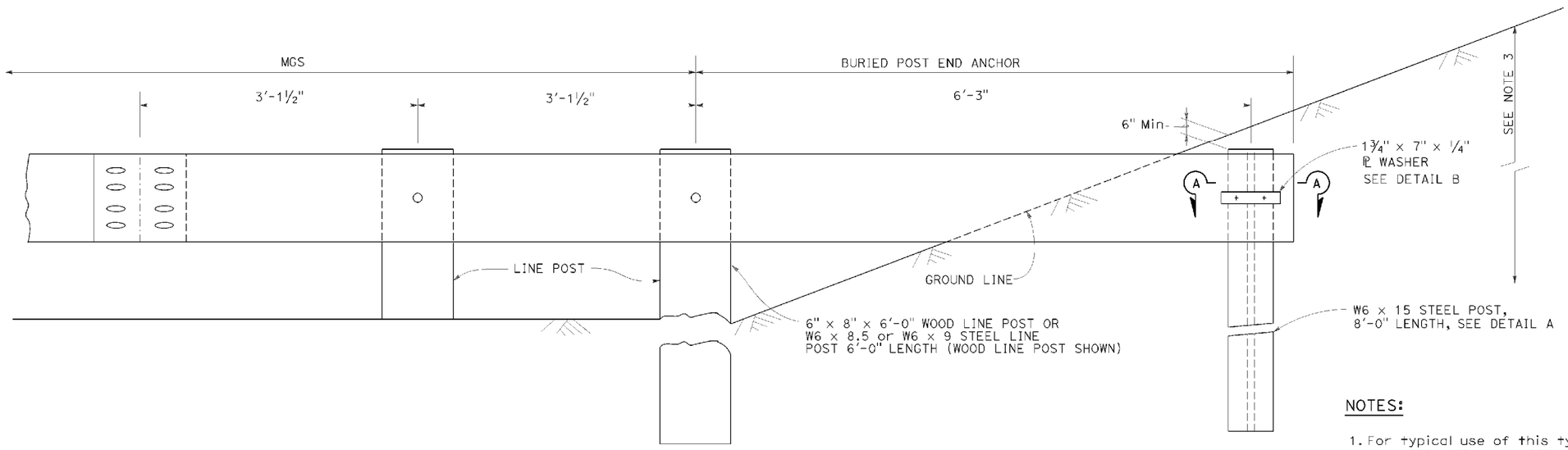


## BURIED POST END ANCHOR

See Note 3

NOTES:

1. For typical use of this type of end anchor with MGS see the A77P, A77Q and A77R Series of the Standard Plans.
2. Holes excavation in the slope to construct the buried post end anchor shall be backfilled with selected earth, placed in layers approximately 1'-0" thick. Each layer shall be moistened and thoroughly compacted.
3. The buried post end anchor shall only be constructed at those locations where the slope perpendicular to the roadway is non-traversable.

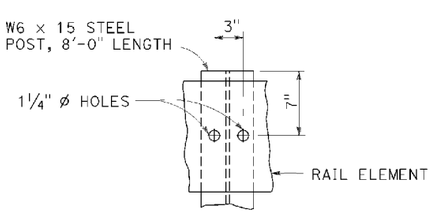


DETAIL A

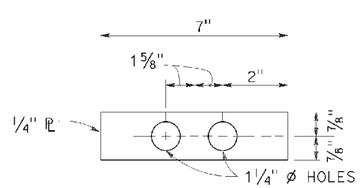


DETAIL B

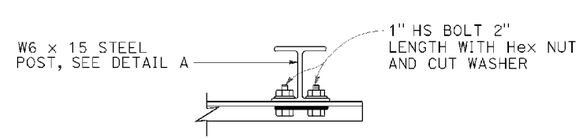


SECTION A-A

STATE OF CALIFORNIA
DEPARTMENT OF TRANSPORTATION

# MIDWEST GUARDRAIL SYSTEM BURIED POST END ANCHOR

NO SCALE

RSP A77T2 DATED NOVEMBER 15, 2013 SUPERSEDES RSP A77T2 DATED JULY 19, 2013 THAT SUPPLEMENTS THE STANDARD PLANS BOOK DATED 2010.

**REVISED STANDARD PLAN RSP A77T2**

**2010 REVISED STANDARD PLAN RSP A77T2**

P:\PROJ\01\41500\drafting\sheets\0113000127va028.dgn

10-4-13

| DIST | COUNTY | ROUTE | POST MILES TOTAL PROJECT | SHEET No. | TOTAL SHEETS |
|---|---|---|---|---|---|
| 01 | Hum | 101 | 109.5/R125.8 | 71 | 100 |

Randell D. Hiatt
REGISTERED CIVIL ENGINEER

July 19, 2013
PLANS APPROVAL DATE

Randell D. Hiatt No. C50200 Exp. 6-30-15 CIVIL STATE OF CALIFORNIA REGISTERED PROFESSIONAL ENGINEER

THE STATE OF CALIFORNIA OR ITS OFFICERS OR AGENTS SHALL NOT BE RESPONSIBLE FOR THE ACCURACY OR COMPLETENESS OF SCANNED COPIES OF THIS PLAN SHEET.

TO ACCOMPANY PLANS DATED May 23, 2016

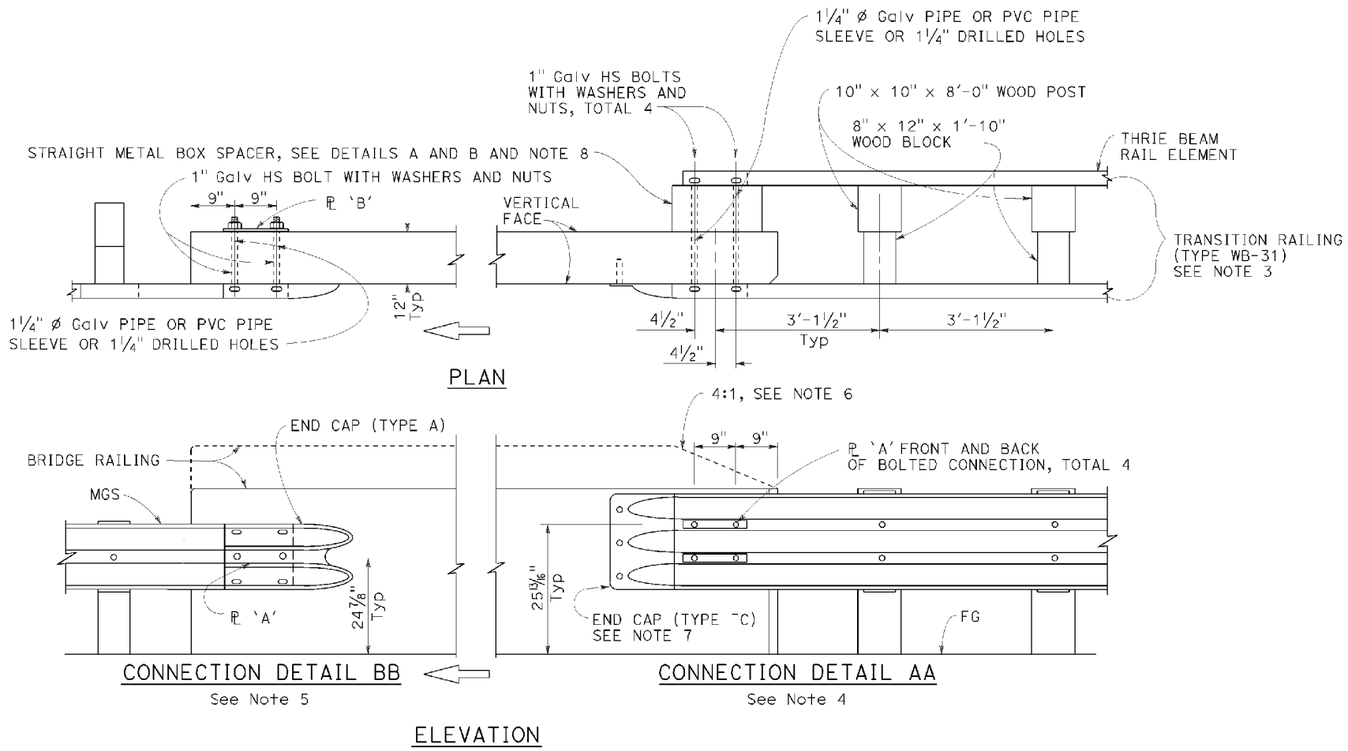


MIDWEST GUARDRAIL SYSTEM CONNECTION TO BRIDGE RAILING WITHOUT SIDEWALK

## NOTES:

1. See Revised Standard Plan RSP A77J2 for additional connection details to bridges without sidewalks.
2. Additional details of posts, blocks and hardware are shown on Revised Standard Plans RSP A77M1, RSP A77N1 and RSP A77N2.
3. For additional details of Transition Railing (Type WB-31), see Revised Standard Plan RSP A77J4. Transition Railing (Type WB-31) transitions the 12 gauge MGS railing section to a heavier gage nested thrie beam railing section which is connected to the concrete bridge railing.
4. For typical use of Connection Detail AA, see Layout Types 12A and 12B on Revised Standard Plan RSP A77Q1, Layout Types 12C and 12D on Revised Standard Plan RSP A77Q2, and Layout Type 12E on Revised Standard Plan RSP A77Q3.
5. For typical use of Connection Detail BB, see Layout Type 12D (structure departure railing connection) on Revised Standard Plan RSP A77Q2 and Layout Type 12DD on Revised Standard Plan RSP A77Q5.
6. Where the height of the bridge railing exceeds the height of the thrie beam railing by more than 1" at Connection Detail AA, taper the top of the end of the bridge railing at 4:1 to match the top elevation of the thrie beam rail.
7. For details of End Cap (Type TC), see Revised Standard Plan RSP A77U4.
8. See Revised Standard Plan RSP A77J4 for additional details regarding depth dimension for straight metal box spacer.

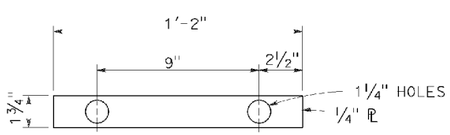


PLATE 'A'

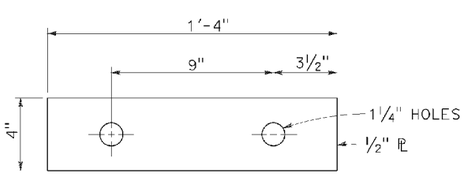


PLATE 'B'
(For backside of connection BB)

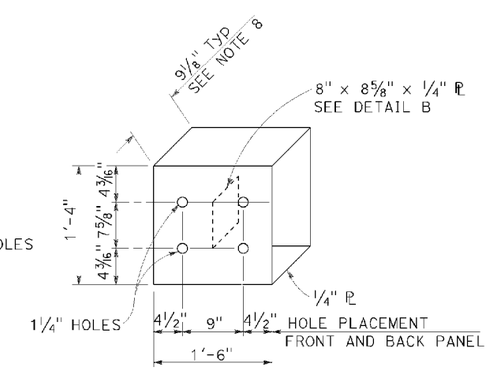


DETAIL A

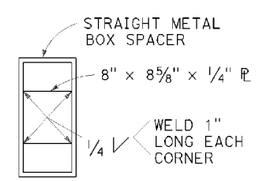


DETAIL B

STRAIGHT METAL BOX SPACER

STATE OF CALIFORNIA
DEPARTMENT OF TRANSPORTATION

# MIDWEST GUARDRAIL SYSTEM CONNECTIONS TO BRIDGE RAILINGS WITHOUT SIDEWALKS DETAILS No. 1

NO SCALE

RSP A77U1 DATED JULY 19, 2013 SUPPLEMENTS THE STANDARD PLANS BOOK DATED 2010.

**REVISED STANDARD PLAN RSP A77U1**

2010 REVISED STANDARD PLAN RSP A77U1

P:\PROJ\01\41500\drafting\sheets\0113000127va029.dgn

7-8-13

| DIST | COUNTY | ROUTE | POST MILES TOTAL PROJECT | SHEET No. | TOTAL SHEETS |
|---|---|---|---|---|---|
| 01 | Hum | 101 | 109.5/R125.8 | 72 | 100 |

Randell D. Hiatt
REGISTERED CIVIL ENGINEER

July 19, 2013
PLANS APPROVAL DATE

REGISTERED PROFESSIONAL ENGINEER Randell D. Hiatt No. C50200 Exp. 6-30-15 CIVIL STATE OF CALIFORNIA

THE STATE OF CALIFORNIA OR ITS OFFICERS OR AGENTS SHALL NOT BE RESPONSIBLE FOR THE ACCURACY OR COMPLETENESS OF SCANNED COPIES OF THIS PLAN SHEET.

TO ACCOMPANY PLANS DATED May 23, 2016

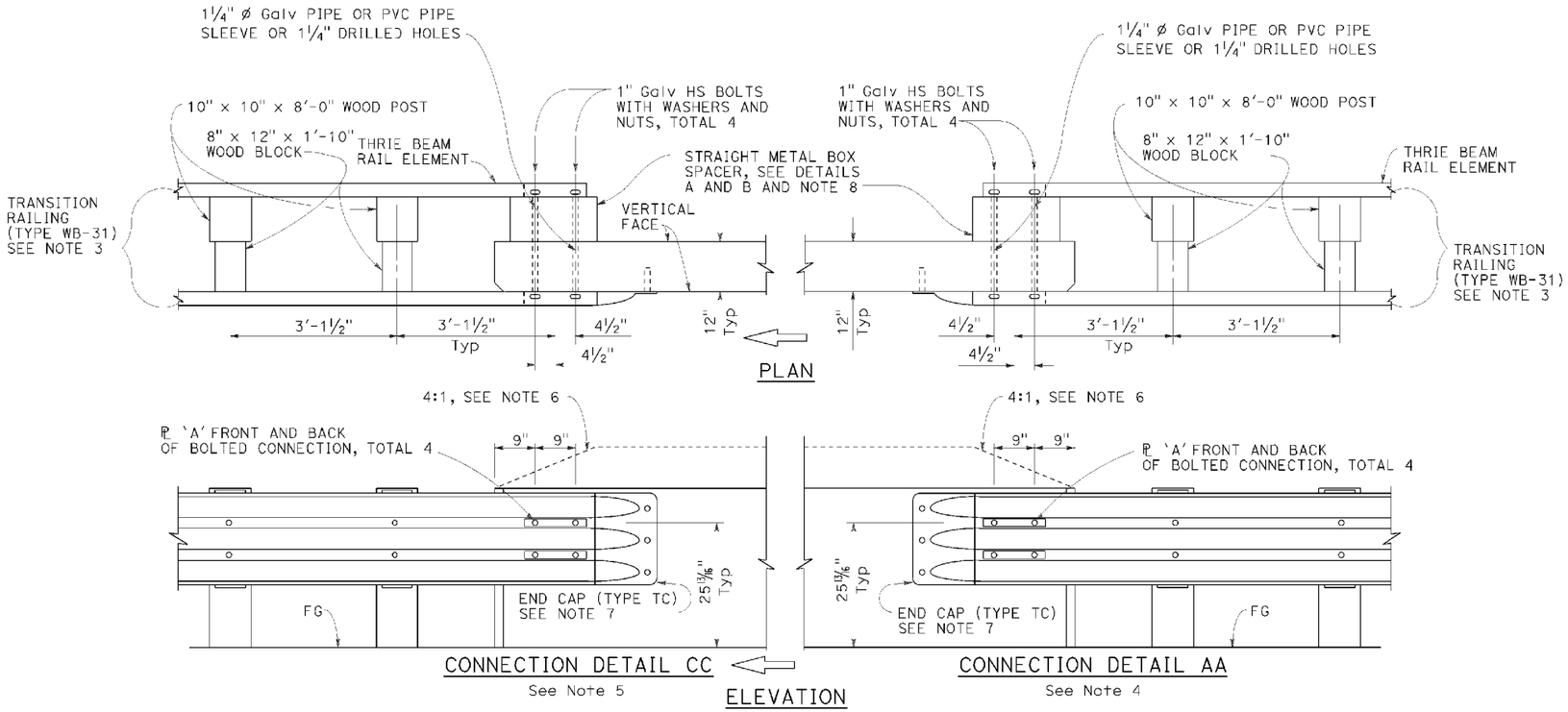


MIDWEST GUARDRAIL SYSTEM CONNECTION TO BRIDGE RAILING WITHOUT SIDEWALK

## NOTES:

1. See Revised Standard Plan RSP A77U1 for additional connection details to bridges without sidewalks.
2. Additional details of posts, blocks and hardware are shown on Revised Standard Plans RSP A77M1, RSP A77N1 and RSP A77N2.
3. For additional details of Transition Railing (Type WB-31), see Revised Standard Plan RSP A77U4. Transition Railing (Type WB-31) transitions the 12 gauge MGS railing section to a heavier gage nested thrie beam railing section which is connected to the concrete bridge railing.
4. For typical use of Connection Detail AA, see Layout Types 12A and 12B on Revised Standard Plan RSP A77Q1, Layout Types 12C and 12D on Revised Standard Plan RSP A77Q2, and Layout Type 12E on Revised Standard Plan RSP A77Q3.
5. For typical use of Connection Detail CC, see Layout Types 12AA and 12BB on Revised Standard Plan RSP A77Q4 and Layout Type 12CC on Revised Standard Plan RSP A77Q5.
6. Where the height of the bridge railing exceeds the height of the thrie beam railing by more than 1" at Connection Detail AA and connection Detail CC, taper the top of the end of the bridge railing at 4:1 to match the top elevation of the thrie beam railing.
7. For details of End Cap (Type TC), see Revised Standard Plan RSP A77U4.
8. See Revised Standard Plan RSP A77U4 for additional details regarding depth dimension for straight metal box spacer.

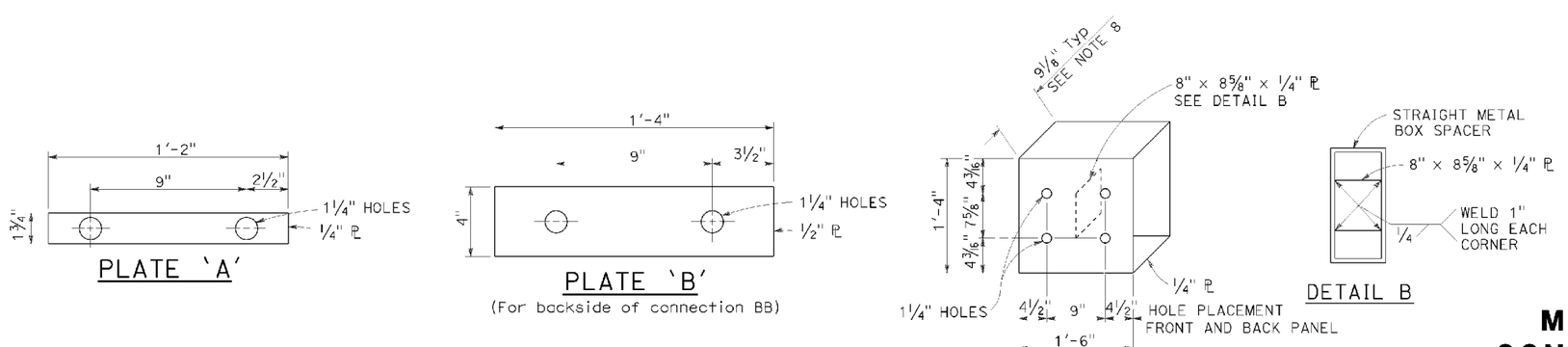


STATE OF CALIFORNIA
DEPARTMENT OF TRANSPORTATION

# MIDWEST GUARDRAIL SYSTEM CONNECTIONS TO BRIDGE RAILINGS WITHOUT SIDEWALKS DETAILS No. 2

NO SCALE

RSP A77U2 DATED JULY 19, 2013 SUPPLEMENTS THE STANDARD PLANS BOOK DATED 2010.

**REVISED STANDARD PLAN RSP A77U2**

2010 REVISED STANDARD PLAN RSP A77U2

P:\PROJ\01\41500\drafting\sheets\0113000127va030.dgn

6-20-13

| DIST | COUNTY | ROUTE | POST MILES TOTAL PROJECT | SHEET No. | TOTAL SHEETS |
|---|---|---|---|---|---|
| 01 | Hum | 101 | 109.5/R125.8 | 73 | 100 |

Randell D. Hiatt
REGISTERED CIVIL ENGINEER

January 23, 2015
PLANS APPROVAL DATE

Randell D. Hiatt No. C50200 Exp. 6-30-15 CIVIL STATE OF CALIFORNIA REGISTERED PROFESSIONAL ENGINEER

THE STATE OF CALIFORNIA OR ITS OFFICERS OR AGENTS SHALL NOT BE RESPONSIBLE FOR THE ACCURACY OR COMPLETENESS OF SCANNED COPIES OF THIS PLAN SHEET.

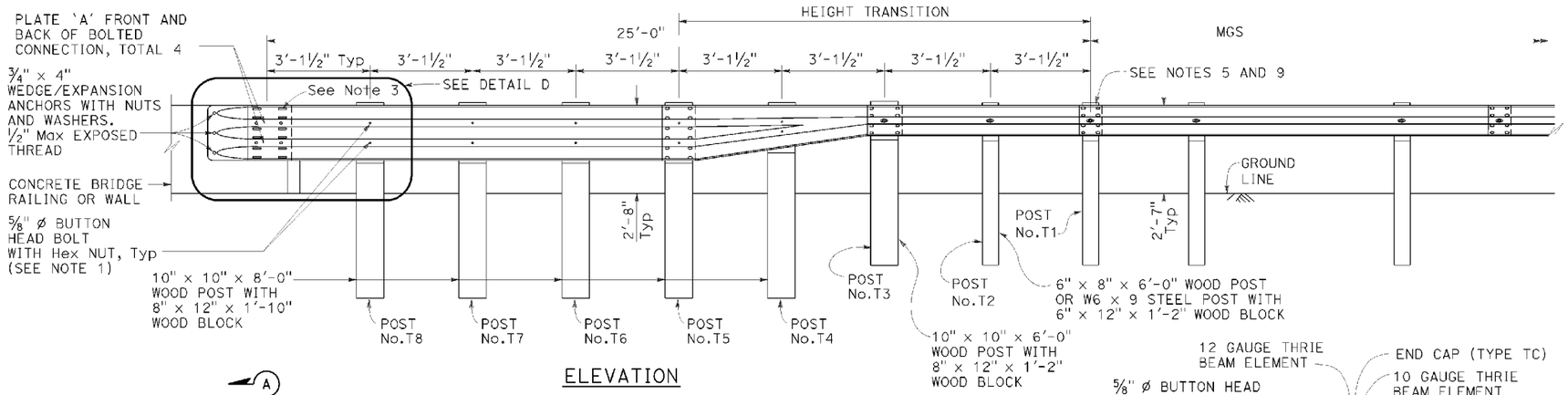


ELEVATION

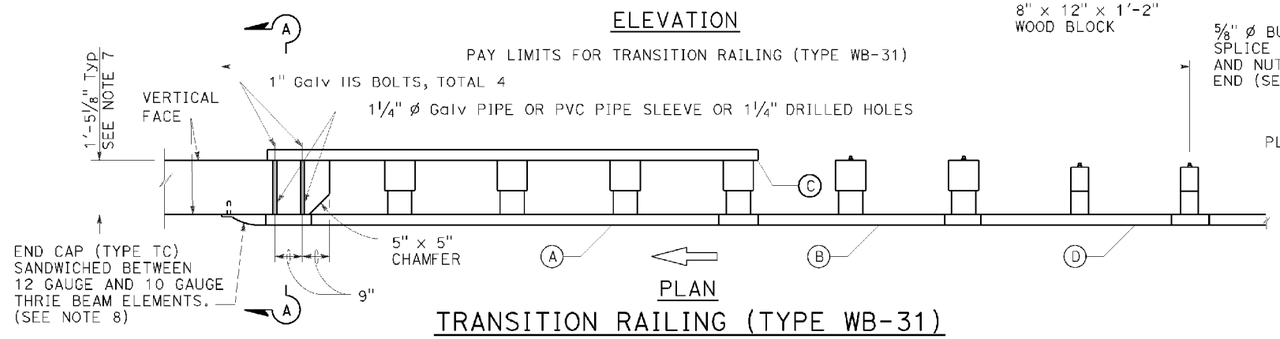


PLAN

TRANSITION RAILING (TYPE WB-31)

(No Blockout Attachment)

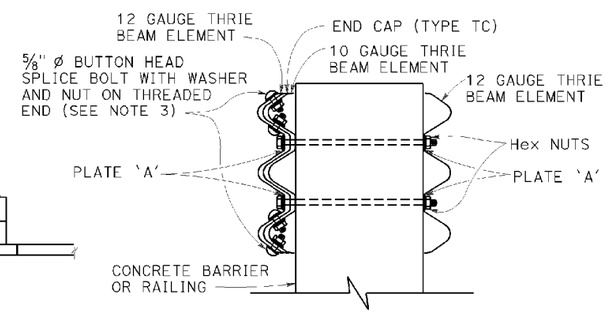


SECTION A-A

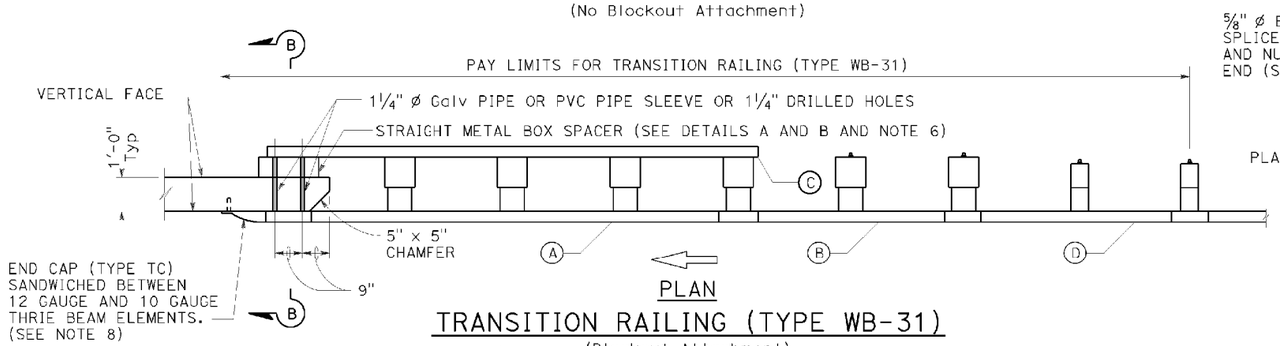


PLAN

TRANSITION RAILING (TYPE WB-31)

(Blockout Attachment)

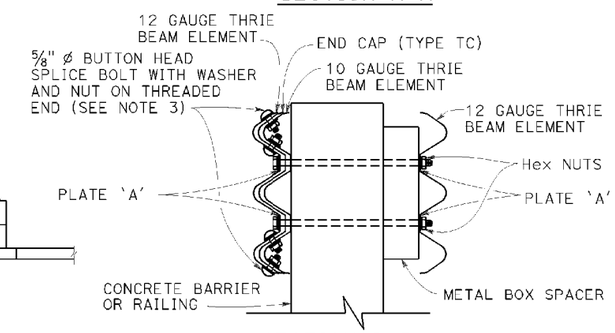


SECTION B-B

## NOTES:

TO ACCOMPANY PLANS DATED May 23, 2016

1. Use ⅝" ø Button head bolts and hex nuts for connections to posts. No washer on rail face for bolted connections to post.
2. The nested rail elements, end cap, and 'W' beam to thrie beam element may be spliced together prior to bolting the elements to the wood post and concrete barrier or railing.
3. Exterior splice bolt holes for rail element splices at Post No. T5 and the connection to the concrete barrier or railing shall be the standard 29/32" x 1⅛" slot size. Interior splice bolt holes at these locations may be increased up to 1¼" ø. Only the top 4 and the bottom 4 splice bolts with washers and nuts are required for rail splices at Post No. T5 and the connection to the concrete barrier or railing.
4. The top elevation of Posts No. T2 through No. T7 shall not project more than 1" above the top elevation of the rail element.
5. Typically, the railing connected to Transition Railing (Type WB-31) will be either standard railing section of MGS with height transition ratio of 150:1 or a Caltrans approved 31" end treatment attached to Post No. T1.
6. The depth of the metal box spacer varies from the 9⅛" to 1½" and is dependent on the width of the concrete railing or wall. The combined dimension for the depth of the metal box spacer plus the width of railing or wall is typically 21⅛". Where the space between the backside of the concrete railing or wall and the rear thrie beam element is less than 1½", metal plates similar to Plate 'A' are to be used as spacers.
7. Where the width of the concrete railing or wall is greater than 17⅛", wood blocks are to be used to fill the space created between the backside of Posts No. T5 through No. T8 and the rear thrie beam element. These wood blocks shall be 8" in width and 1'-2" in length. The dimension between the front thrie beam element and the rear thrie beam element is to match the width of the concrete railing or wall.
8. End cap may be installed over 12 gauge and 10 gauge thrie beam elements where transition railing is installed on the departure end of bridge railing.
9. Conform standard railing section height to 31" at Post No. T1 using height transition ratio of 150:1.

## LEGEND:

(A) NESTED THRIE BEAM ELEMENTS (ONE 12 GAUGE ELEMENT NESTED OVER ONE 10 GAUGE ELEMENT).

(B) ONE ASYMMETRICAL 10 GAUGE "W" BEAM TO THRIE BEAM ELEMENT.

(C) ONE 12 GAUGE THRIE BEAM ELEMENT.

(D) ONE 10 GAUGE "W" BEAM RAIL ELEMENT (7'-3½"LENGTH)

10 GAUGE = 0.138" THICK
12 GAUGE = 0.108" THICK

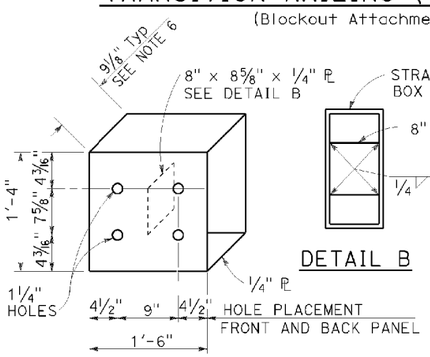


DETAIL A

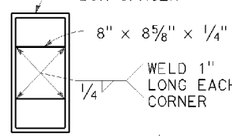


DETAIL B

STRAIGHT METAL BOX SPACER

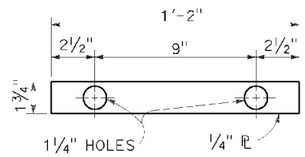


DETAIL C

PLATE 'A'

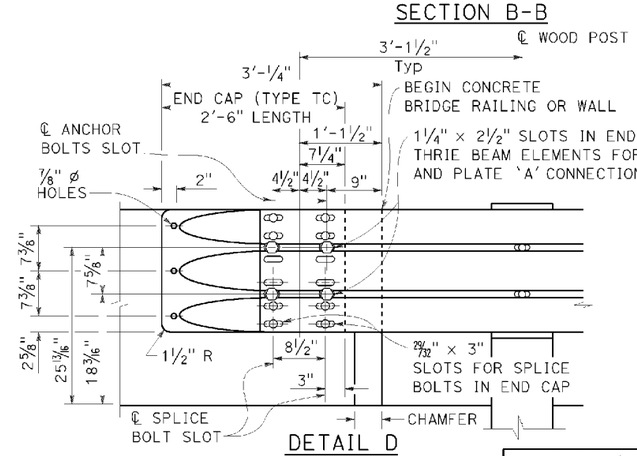


DETAIL D

STATE OF CALIFORNIA
DEPARTMENT OF TRANSPORTATION

# MIDWEST GUARDRAIL SYSTEM TRANSITION RAILING (TYPE WB-31)

NO SCALE

RSP A77U4 DATED JANUARY 23, 2015 SUPERSEDES RSP A77U4 DATED NOVEMBER 15, 2013 AND RSP A77U4 DATED JULY 19, 2013 THAT SUPPLEMENTS THE STANDARD PLANS BOOK DATED 2010.

**REVISED STANDARD PLAN RSP A77U4**

2010 REVISED STANDARD PLAN RSP A77U4

P:\PROJ\01\41500\drafting\sheets\0113000127va031.dgn

1-8-15

| DIST. | COUNTY | ROUTE | POST MILES TOTAL PROJECT | SHEET No. | TOTAL SHEETS |
|---|---|---|---|---|---|
| 01 | Hum | 101 | 109.5/R125.8 | 74 | 100 |

REGISTERED CIVIL ENGINEER

July 19, 2013
PLANS APPROVAL DATE

REGISTERED PROFESSIONAL ENGINEER
Michael Janzen
No. 44788
Exp. 03-31-14
CIVIL
STATE OF CALIFORNIA

THE STATE OF CALIFORNIA OR ITS OFFICIALS OR AGENTS SHALL NOT BE RESPONSIBLE FOR THE ACCURACY OR COMPLETENESS OF SCANNED COPIES OF THIS PLAN SHEET.

TO ACCOMPANY PLANS DATED May 23, 2016

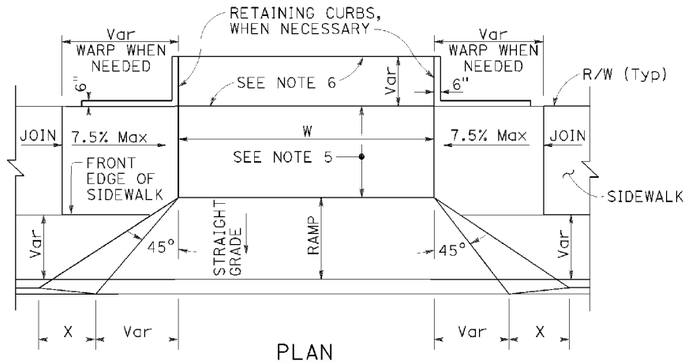


PLAN

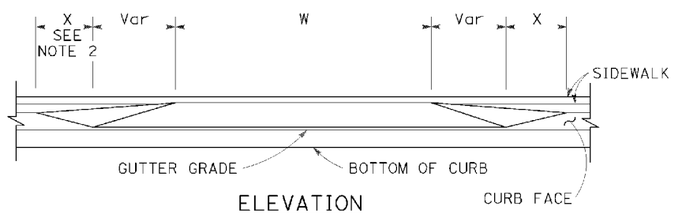


ELEVATION

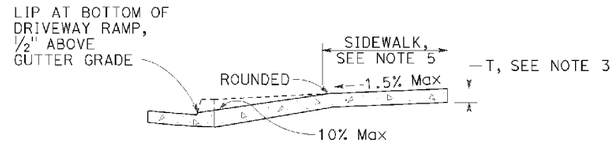


CASE A

Typical driveway, sidewalk not depressed

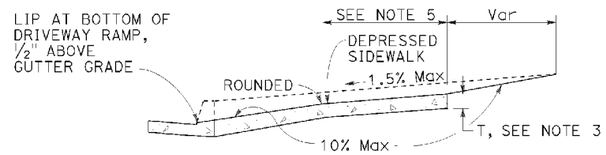


CASE B

Driveway with depressed sidewalk

SECTIONS

## DRIVEWAYS

TABLE A

| CURB TYPE | DIMENSIONS | | | |
|---|---|---|---|---|
| | "H1" | "H2" | "W1" | "W2" |
| A1-6 | 1'-2" | 6" | 7½" | 1½" |
| A1-8 | 1'-4" | 8" | 8" | 2" |
| A2-6 | 1'-0" | 6" | 2'-7½" | 1½" |
| A2-8 | 1'-2" | 8" | 2'-8" | 2" |
| A3-6 | 6" | 5" | 7¼" | 1¼" |
| A3-8 | 8" | 7" | 7¾" | 1¾" |
| B1-4 | 1'-0" | 4" | 7½" | 2½" |
| B1-6 | 1'-2" | 6" | 9" | 4" |
| B2-4 | 10" | 4" | 2'-7½" | 2½" |
| B2-6 | 1'-0" | 6" | 2'-9" | 4" |
| B3-4 | 4" | 3" | 7" | 2" |
| B3-6 | 6" | 5" | 8½" | 3½" |
| D-4 | 10" | 4" | 1'-6" | 1'-1" |
| D-6 | 1'-0" | 6" | 2'-2" | 1'-9" |

CURB QUANTITIES

| TYPE | CUBIC YARDS PER LINEAR FOOT |
|---|---|
| A1-6 | 0.02585 |
| A1-8 | 0.03084 |
| A2-6 | 0.05903 |
| A2-8 | 0.06379 |
| A3-6 | 0.01036 |
| A3-8 | 0.01435 |
| B1-4 | 0.02185 |
| B1-6 | 0.02930 |
| B2-4 | 0.05515 |
| B2-6 | 0.06171 |
| B3-4 | 0.00641 |
| B3-6 | 0.01074 |
| B4 | 0.05709 |
| D-4 | 0.04083 |
| D-6 | 0.06804 |
| E | 0.06661 |

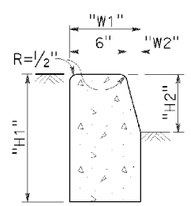


TYPE A1 CURBS

See Table A

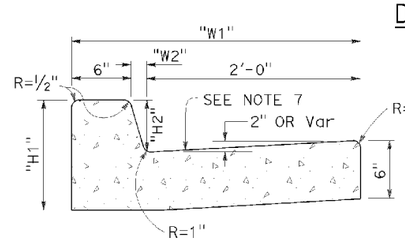


TYPE A2 CURBS

See Table A

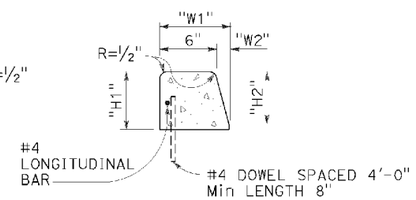


TYPE A3 CURBS

Superimposed on existing pavement
See Table A

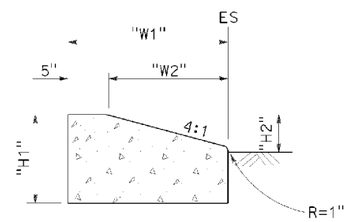


TYPE D CURBS

See Table A

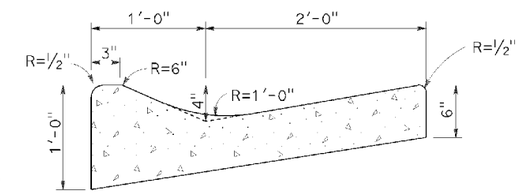


TYPE E CURB

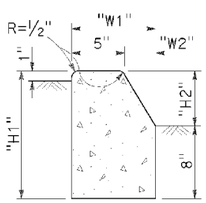


TYPE B1 CURBS

See Table A

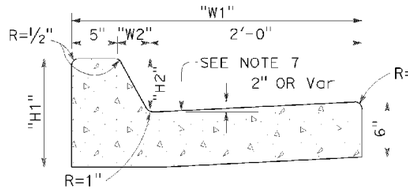


TYPE B2 CURBS

See Table A

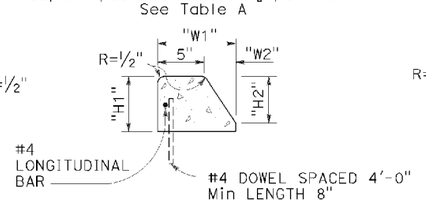


TYPE B3 CURBS

Superimposed on existing pavement
See Table A

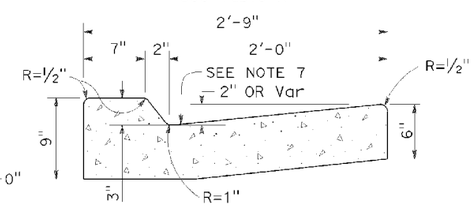


TYPE B4 CURBS

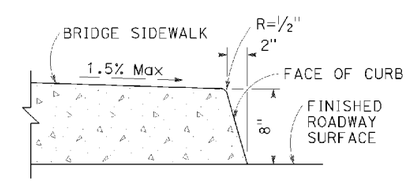


TYPE H CURB

On Bridges

## CURBS

NOTES:

1. Case A driveway section typically applies.
2. X=3'-0" except for curb heights over 10" where 4:1 slopes shall be used on curb slope.
3. Sidewalk and ramp thickness "T" at driveway shall be 4" for residental and 6" for commercial.
4. Difference in slope of the driveway ramp and the slope of a line between the gutter and a point on the roadway 5'-0" from gutter line shall not exceed 15%. Reduce driveway ramp slope, not gutter slope, where required.
5. Minimum width of clear passageway for sidewalk shall be 4'-2".
6. Retaining curbs and acquisition of construction easement may be necessary for narrow sidewalks or curb heights in excess of 6".
7. Across the pedestrian route at curb ramp locations, the gutter pan slope shall not exceed 1" of depth for each 2'-0" of width.

STATE OF CALIFORNIA
DEPARTMENT OF TRANSPORTATION

# CURBS AND DRIVEWAYS

NO SCALE

RSP A87A DATED JULY 19, 2013 SUPERSEDES STANDARD PLAN A87A DATED MAY 20, 2011 - PAGE 119 OF THE STANDARD PLANS BOOK DATED 2010.

**REVISED STANDARD PLAN RSP A87A**

2010 REVISED STANDARD PLAN RSP A87A

P:\PROJ\01\41500\drafting\sheets\0113000127va032.dgn

| Dist | COUNTY | ROUTE | POST MILES TOTAL PROJECT | SHEET No. | TOTAL SHEETS |
|---|---|---|---|---|---|
| 01 | Hum | 101 | 109.5/R125.8 | 75 | 100 |

REGISTERED CIVIL ENGINEER

January 15, 2016
PLANS APPROVAL DATE

REGISTERED PROFESSIONAL ENGINEER
Michael Janzen
No. 44788
Exp. 3-31-16
CIVIL
STATE OF CALIFORNIA

*THE STATE OF CALIFORNIA OR ITS OFFICERS OR AGENTS SHALL NOT BE RESPONSIBLE FOR THE ACCURACY OR COMPLETENESS OF SCANNED COPIES OF THIS PLAN SHEET.*

TO ACCOMPANY PLANS DATED May 23, 2016

**2010 REVISED STANDARD PLAN RSP A87B**

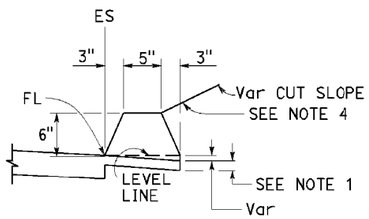


TYPE A
See Notes 3 and 5

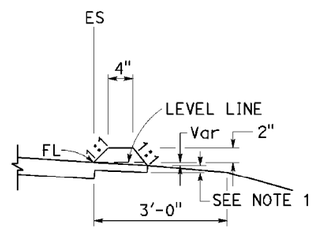


TYPE C

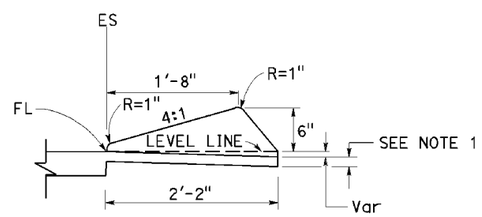


TYPE D

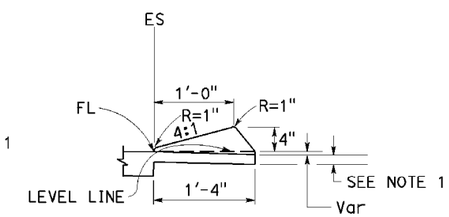


TYPE E

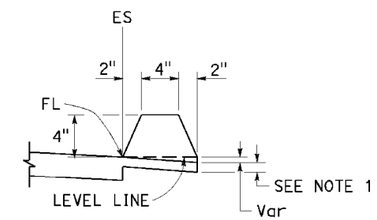


TYPE F
See Note 5

## DIKES

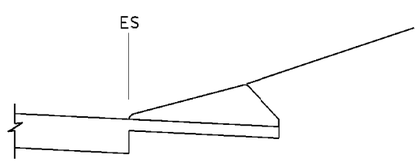


CASE C-1
Cut Slope

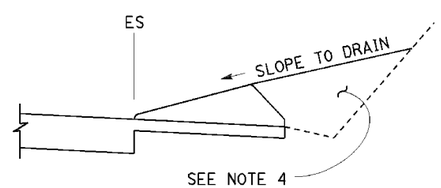


CASE C-2
Cut Slope

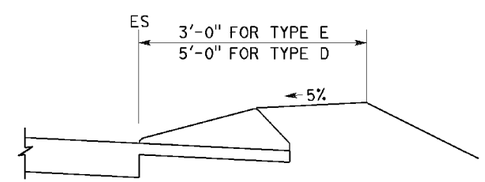


CASE F

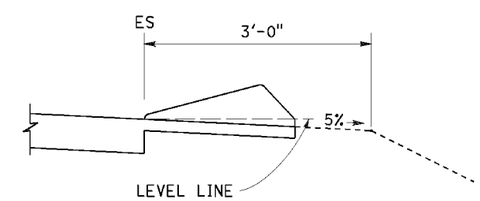


CASE R
See Note 2

## TYPE D AND E BACKFILL DETAILS

**NOTES:**

1. For HMA shoulders only, extend top layer of HMA placed on the shoulder under dike with no joint at the ES. For projects with OGFC shoulders, do not extend OGFC under dike. See project plans for modified dike detail.
2. Case R applies to retrofit only projects where restrictive conditions do not provide enough width for Case F backfill.
3. Type A dike only to be used where restrictive slope conditions do not provide enough width to use Type D or Type E dike.
4. Fill and compact with excavated material to top of dike.
5. Use Type A or F dike, where dike is required with guardrail installations. See Revised Standard Plan RSP A77N4 for dike positioning details. See Revised Standard Plan RSP A77N3 for hinge point offsets with guardrail.

DIKE QUANTITIES

| TYPE | CUBIC YARDS PER LINEAR FOOT |
|---|---|
| A | 0.0135 |
| C | 0.0038 |
| D | 0.0293 |
| E | 0.0130 |
| F | 0.0066 |

Quantities based on 5% cross slope.

STATE OF CALIFORNIA
DEPARTMENT OF TRANSPORTATION

# HOT MIX ASPHALT DIKES

NO SCALE

RSP A87B DATED JANUARY 15, 2016 SUPERSEDES RSP A87B DATED JULY 19, 2013 AND STANDARD PLAN A87B DATED MAY 20, 2011 - PAGE 120 OF THE STANDARD PLANS BOOK DATED 2010.

**REVISED STANDARD PLAN RSP A87B**

P:\PROJ\01\41500\drafting\sheets\0113000127va033.dgn

11-17-15

| DIST | COUNTY | ROUTE | POST MILES TOTAL PROJECT | SHEET No. | TOTAL SHEETS |
|---|---|---|---|---|---|
| 01 | Hum | 101 | 109.5/R125.8 | 76 | 100 |

H. David Cordova
REGISTERED CIVIL ENGINEER

July 15, 2016
PLANS APPROVAL DATE

Hector David Cordova No. C41957 Exp. 3-31-18 CIVIL
REGISTERED PROFESSIONAL ENGINEER STATE OF CALIFORNIA

THE STATE OF CALIFORNIA OR ITS OFFICERS OR AGENTS SHALL NOT BE RESPONSIBLE FOR THE ACCURACY OR COMPLETENESS OF SCANNED COPIES OF THIS PLAN SHEET.

TO ACCOMPANY PLANS DATED May 23, 2016

**2010 REVISED STANDARD PLAN RSP A88A**

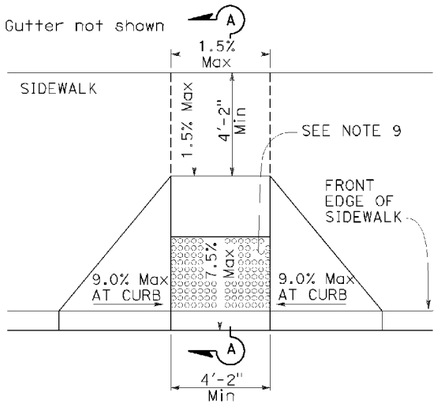


CASE A

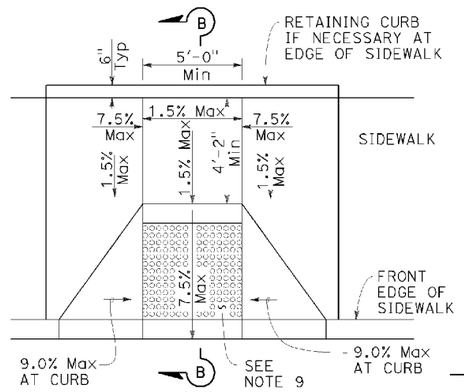


CASE B

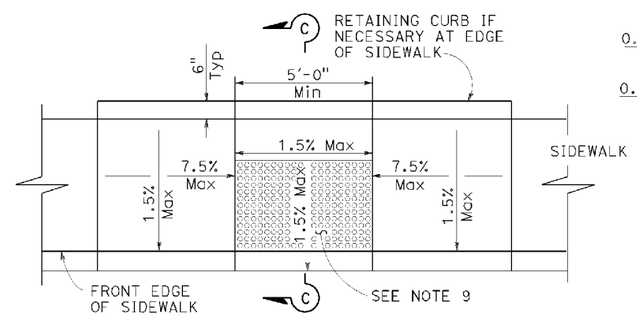


CASE C

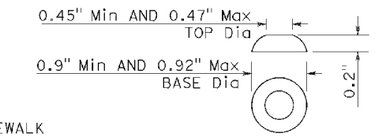


RAISED TRUNCATED DOME

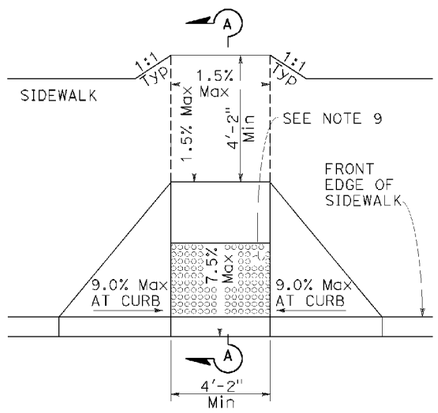


CASE D

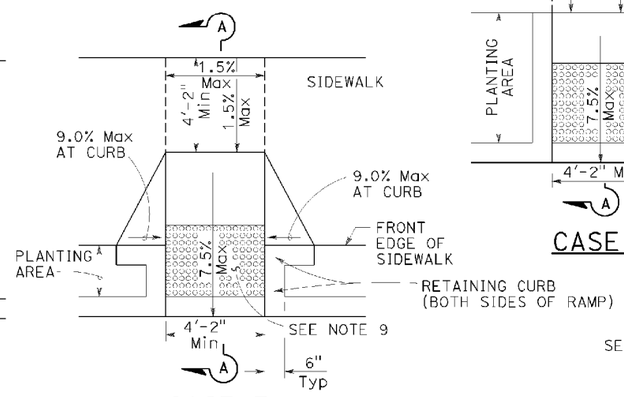


CASE E

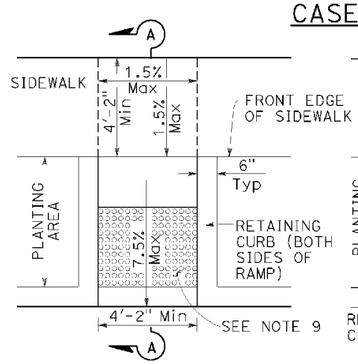


CASE F

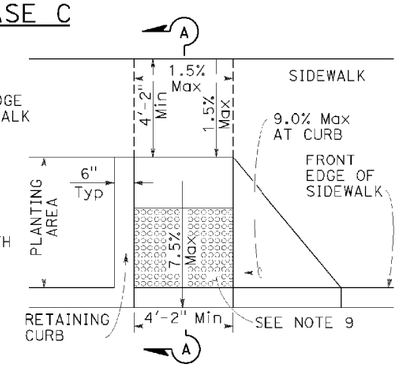


CASE G
See Note 4

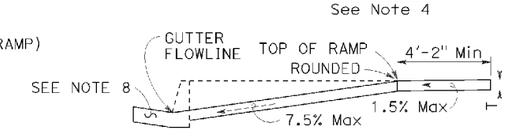


SECTION A-A

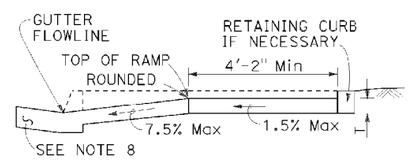


SECTION B-B
Depress entire sidewalk as required

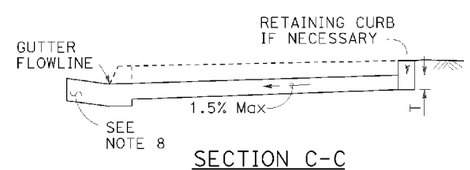


SECTION C-C

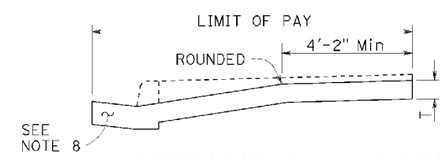


RETROFIT PAY LIMITS
Existing curb and sidewa k

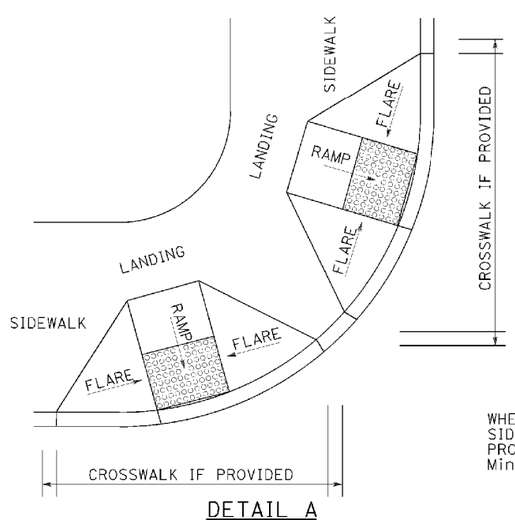


DETAIL A
TYPICAL TWO-RAMP CORNER INSTALLATION
See Note 1

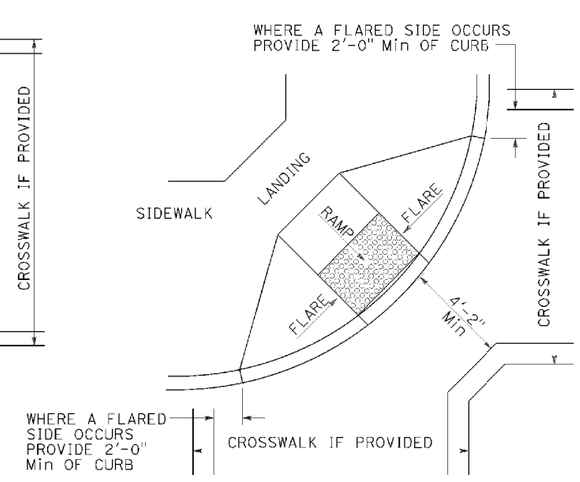


DETAIL B
TYPICAL ONE-RAMP CORNER INSTALLATION
See Notes 1 and 3

## NOTES:

1. As site conditions dictate, Case A through Case G curb ramps may be used for corner installations similar to those shown in Detail A and Detail B. The case of curb ramps used in Detail A do not have to be the same. Case A through Case G curb ramps also may be used at mid block locations, as site conditions dictate.
2. If distance from curb to back of sidewalk is too short to accommodate ramp and 4'-2" platform (landing) as shown in Case A, the sidewalk may be depressed longitudinally as in Case B, or C or may be widened as in Case D.
3. When ramp is located in center of curb return, crosswalk configuration must be similar to that shown for Detail B.
4. As site conditions dictate, the retaining curb side and the flared side of the Case G ramp shall be constructed in reversed position.
5. If located on a curve, the sides of the ramp need not be parallel, but the minimum width of the ramp shall be 4'-2".
6. Side slope of ramp flares vary uniformly from a maximum of 9.0% at curb to conform with longitudinal sidewalk slope adjacent to top of the ramp, except in Case C and Case F.
7. The adjacent surfaces at transitions at curb ramps to walks, gutters, and streets shall be at the same level.
8. Counter slopes of adjoining gutters and road surfaces immediately adjacent to and within 24 inches of the curb ramp shall not be steeper than 1:20 (5.0%). Gutter pan slope shall not exceed 1" of depth for each 2'-0" of width.
9. Curb ramps shall have a detectable warning surface that extends the full width and 3'-0" depth of the ramp. A 4'-0" wide detectable warning surface may be used on a 4'-2" wide curb ramp. Detectable Warning Surfaces shall conform to the requirements in the Standard Specifications.
10. Sidewalk and ramp thickness, "T", shall be 3½" minimum.
11. Utility pull boxes, manholes, vaults and all other utility facilities within the boundaries of the curb ramp will be relocated or adjusted to grade by the owner prior to, or in conjunction with, curb ramp construction.
12. Detectable warning surface may have to be cut to allow removal of utility covers while maintaining full detectable warning width and depth.

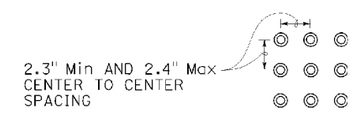


RAISED TRUNCATED DOME PATTERN (IN-LINE)
DETECTABLE WARNING SURFACE
See Note 9

STATE OF CALIFORNIA
DEPARTMENT OF TRANSPORTATION

# CURB RAMP DETAILS

NO SCALE

RSP A88A DATED JULY 15, 2016 SUPERSEDES RSP A88A DATED JULY 3, 2015, RSP A88A DATED MARCH 21, 2014 AND RSP A88A DATED JULY 19, 2013 AND STANDARD PLAN A88A DATED MAY 20, 2011 - PAGE 121 OF THE STANDARD PLANS BOOK DATED 2010.

**REVISED STANDARD PLAN RSP A88A**

P:\PROJ\01\41500\drafting\sheets\0113000127va034.dgn

3-30-16

| DIST | COUNTY | ROUTE | POST MILES TOTAL PROJECT | SHEET No. | TOTAL SHEETS |
|---|---|---|---|---|---|
| 01 | Hum | 101 | 109.5/R125.8 | 77 | 100 |

REGISTERED CIVIL ENGINEER

July 15, 2016
PLANS APPROVAL DATE

Hector David Cordova
No. C41957
Exp. 3-31-18
CIVIL
REGISTERED PROFESSIONAL ENGINEER
STATE OF CALIFORNIA

THE STATE OF CALIFORNIA OR ITS OFFICERS OR AGENTS SHALL NOT BE RESPONSIBLE FOR THE ACCURACY OR COMPLETENESS OF SCANNED COPIES OF THIS PLAN SHEET.

TO ACCOMPANY PLANS DATED May 23, 2016

Gutter not shown

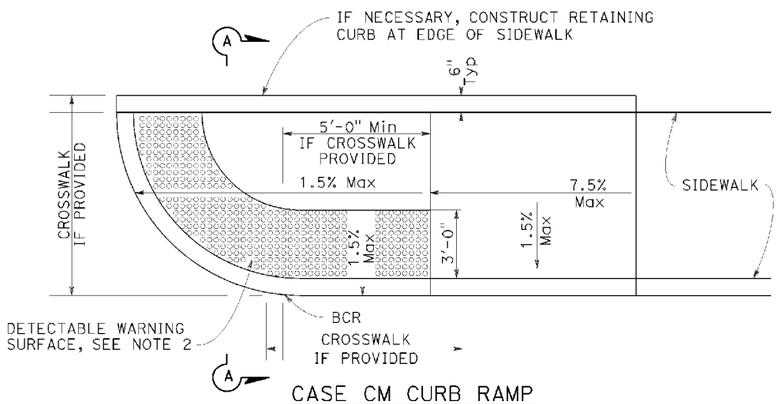


CASE CM CURB RAMP

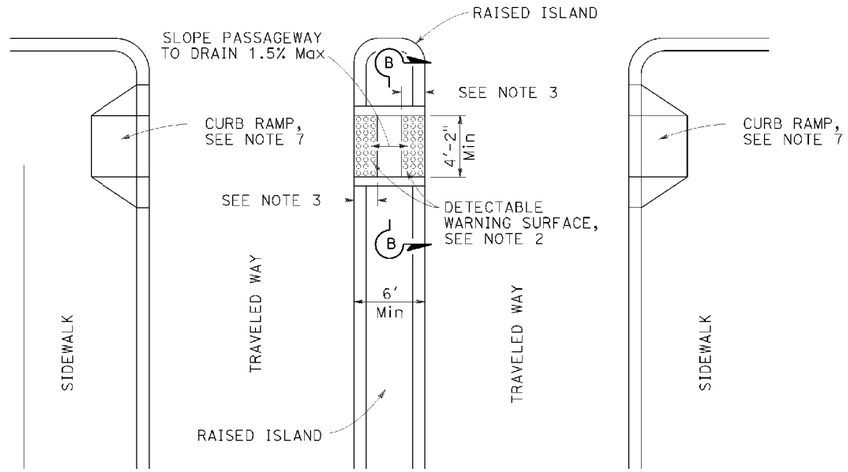


TYPE A PASSAGEWAY

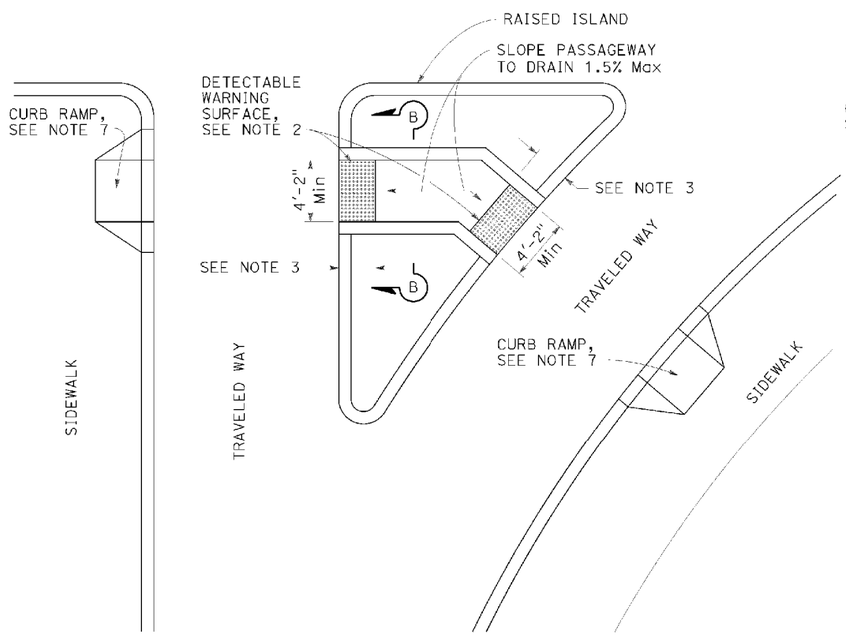


TYPE B PASSAGEWAY

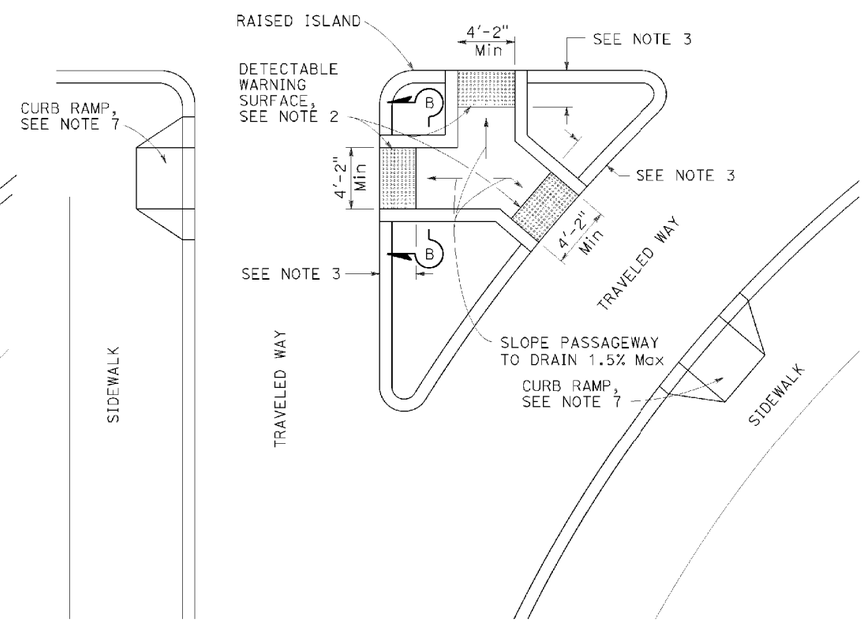


TYPE C PASSAGEWAY

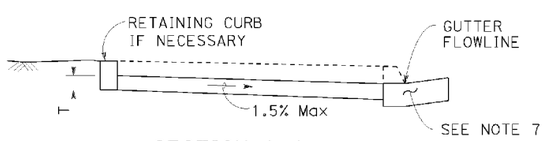


SECTION A-A

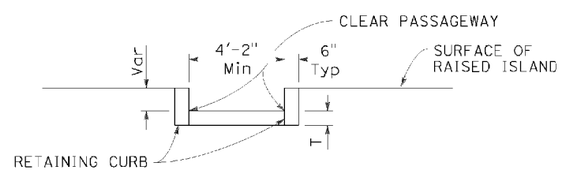


SECTION B-B

## NOTES:

1. Sidewalk, ramp and passageway thickness, "T", shall be 3½" minimum.
2. For details of detectable warning surfaces, see Revised Standard Plan RSP A88A.
3. Where an island passageway length is greater than or equal to 6'-0", but less than 8'-0", each detectable warning surface shall extend the full width and 2'-0" depth of the passageway length. Where an island passageway length is greater than or equal to 8'-0", each detectable warning surface shall extend the full width and 3'-0" depth of the passageway length. A 4'-0" wide detectable warning surface may be used on a 4'-2" wide island passageway.
4. The adjacent surfaces at transitions at curb ramps to walks, gutters, and streets shall be at the same level.
5. Utility pull boxes, manholes, vaults and all other utility facilities within the boundaries of the curb ramp will be relocated or adjusted to grade by the owner prior to, or in conjunction with, curb ramp construction.
6. Detectable warning surface may have to be cut to allow removal of utility covers while maintaining full detectable warning width and depth.
7. For additional curb ramp details, see Revised Standard Plan RSP A88A.

STATE OF CALIFORNIA
DEPARTMENT OF TRANSPORTATION

# CURB RAMP AND ISLAND PASSAGEWAY DETAILS

NO SCALE

RSP A88B DATED JULY 15, 2016 SUPERSEDES RSP A88B DATED JULY 3, 2015, RSP A88B DATED MARCH 21, 2014 AND RSP A88B DATED JULY 19, 2013 AND STANDARD PLAN A88B DATED MAY 20, 2011 - PAGE 122 OF THE STANDARD PLANS BOOK DATED 2010.

**REVISED STANDARD PLAN RSP A88B**

**2010 REVISED STANDARD PLAN RSP A88B**

P:\PROJ\01\41500\drafting\sheets\0113000127va035.dgn

3-29-18

| DIST | COUNTY | ROUTE | POST MILES TOTAL PROJECT | SHEET NO. | TOTAL SHEETS |
|---|---|---|---|---|---|
| 01 | Hum | 101 | 109.5/R125.8 | 78 | 100 |

Theresa Gabriel
REGISTERED ELECTRICAL ENGINEER

October 30, 2015
PLANS APPROVAL DATE

REGISTERED PROFESSIONAL ENGINEER
Theresa Aziz Gabriel
No. E15129
Exp. 6-30-16
ELECTRICAL
STATE OF CALIFORNIA

*THE STATE OF CALIFORNIA OR ITS OFFICERS OR AGENTS SHALL NOT BE RESPONSIBLE FOR THE ACCURACY OR COMPLETENESS OF SCANNED COPIES OF THIS PLAN SHEET.*

TO ACCOMPANY PLANS DATED May 23, 2016

## LEGEND:

- AB ABANDON. IF APPLIED TO CONDUIT, REMOVE CONDUCTORS
- BC INSTALL PULL BOX IN EXISTING CONDUIT RUN
- BP PEDESTRIAN BARRICADE, TYPE AS INDICATED ON PLAN
- CB INSTALL CONDUIT INTO EXISTING PULL BOX
- CC CONNECT NEW AND EXISTING CONDUIT. REMOVE EXISTING CONDUCTORS AND INSTALL CONDUCTORS AS INDICATED
- CF CONDUIT TO REMAIN FOR FUTURE USE. REMOVE CONDUCTORS. INSTALL PULL TAPE
- DH DETECTOR HANDHOLE
- FA FOUNDATION TO BE ABANDONED
- IS INSTALL SIGN ON SIGNAL MAST ARM
- NS NO SLIP BASE ON STANDARD
- PEC PHOTOELECTRIC CONTROL
- PEU PHOTOELECTRIC UNIT
- RC EQUIPMENT OR MATERIAL TO BE REMOVED AND BECOME THE PROPERTY OF THE CONTRACTOR
- RE REMOVE ELECTROLIER, FUSES AND BALLAST. TAPE ENDS OF CONDUCTORS
- RL RELOCATE EQUIPMENT
- RR REMOVE AND REUSE EQUIPMENT
- RS REMOVE AND SALVAGE EQUIPMENT
- SC SPLICE NEW TO EXISTING CONDUCTORS
- SD SERVICE DISCONNECT
- TSP TELEPHONE SERVICE POINT

## ABBREVIATIONS

| | |
|---|---|
| AC+ | UNDERGROUNDED CONDUCTOR |
| APS | ACCESSIBLE PEDESTRIAN SIGNAL |
| Batt | BATTERY |
| BBS | BATTERY BACKUP SYSTEM |
| BC | BOLT CIRCLE |
| Blk | BLACK |
| BP | BYPASS |
| BPB | BICYCLE PUSH BUTTON |
| C | CONDUIT |
| CB | CIRCUIT BREAKER |
| CCTV | CLOSED CIRCUIT TELEVISION |
| Ckt | CIRCUIT |
| CMS | CHANGEABLE MESSAGE SIGN |
| Ctid | CALTRANS IDENTIFICATION |
| Comm | COMMUNICATION |
| Cntl | CONTROL |
| DF | DEPARTMENT-FURNISHED |
| DLC | LOOP DETECTOR LEAD-IN CABLE |
| EMS | EXTINGUISHABLE MESSAGE SIGN |
| EVUC | EMERGENCY VEHICLE UNIT CABLE |
| EVUD | EMERGENCY VEHICLE UNIT DETECTOR |
| FB | FLASHING BEACON |
| FBCA | FLASHING BEACON CONTROL ASSEMBLY |
| FBS | FLASHING BEACON WITH SLIP BASE |
| FO | FIBER OPTIC |
| G | EQUIPMENT GROUNDING CONDUCTOR |
| GB | GROUND BUS |
| GFCI | GROUND FAULT CIRCUIT INTERRUPTER |
| Grn | GREEN |
| HAR | HIGHWAY ADVISORY RADIO |
| Hex | HEXAGONAL |
| HPS | HIGH PRESSURE SODIUM |
| IISNS | INTERNALLY ILLUMINATED STREET NAME SIGN |
| ISL | INDUCTION SIGN LIGHTING |
| LED | LIGHT EMITTING DIODE |
| LMA | LUMINAIRE MAST ARM |
| LPS | LOW PRESSURE SODIUM |
| Ltg | LIGHTING |
| Lum | LUMINAIRE |
| M | METERED |
| MAT | MAST ARM MOUNTING TOP ATTACHMENT |
| MAS | MAST ARM MOUNTING SIDE ATTACHMENT |
| MBPS | MANUAL BYPASS SWITCH |
| M/M | MULTIPLE TO MULTIPLE TRANSFORMER |
| Mtg | MOUNTING |
| MV | MERCURY VAPOR LIGHTING FIXTURE |
| MVDS | MICROWAVE VEHICLE DETECTION SYSTEM |
| N | NEUTRAL (GROUNDED CONDUCTOR) |
| NB | NEUTRAL BUS |
| NC | NORMALLY CLOSE |
| NO | NORMALLY OPEN |
| P | CIRCUIT BREAKER'S POLE |
| PB | PULL BOX |
| PBA | PUSH BUTTON ASSEMBLY |
| PEC | PHOTOELECTRIC CONTROL |
| Ped | PEDESTRIAN |
| PEU | PHOTOELECTRIC UNIT |
| PT | CONDUIT WITH PULL TAPE |
| PTR | POWER TRANSFER RELAY |
| RE | RELOCATED EQUIPMENT |
| RM | RAMP METERING |
| RWIS | ROADSIDE WEATHER INFORMATION SYSTEM |
| SB | SLIP BASE |
| SIC | SIGNAL INTERCONNECT CABLE |
| Sig | SIGNAL |
| SMA | SIGNAL MAST ARM |
| SNS | STREET NAME SIGN |
| SP | SERVICE POINT |
| TB | TERMINAL BOARD |
| TDC | TELEPHONE DEMARCATION CABINET |
| Temp | TEMPERATURE |
| TMS | TRAFFIC MONITORING STATION |
| TOS | TRAFFIC OPERATIONS SYSTEM |
| UPS | UNINTERRUPTABLE POWER SUPPLY |
| UPSC | UNINTERRUPTABLE POWER SUPPLY CONTROLLER |
| Veh | VEHICLE |
| VIVDS | VIDEO IMAGE VEHICLE DETECTION SYSTEM |
| Wht | WHITE |
| WIM | WEIGH-IN-MOTION |
| Xfmr | TRANSFORMER |

## SOFFIT AND WALL-MOUNTED LUMINAIRES

- PENDANT SOFFIT LUMINAIRE, 70 W HPS UNLESS OTHERWISE SPECIFIED
- FLUSH-MOUNTED SOFFIT LUMINAIRE, 70 W HPS UNLESS OTHERWISE SPECIFIED
- WALL-MOUNTED LUMINAIRE, 70 W HPS UNLESS OTHERWISE SPECIFIED
- EXISTING SOFFIT OR WALL-MOUNTED LUMINAIRE TO REMAIN UNMODIFIED
- EXISTING SOFFIT OR WALL-MOUNTED LUMINAIRE TO BE MODIFIED AS SPECIFIED

NOTE:
Arrow indicates "street side" of luminaire.

COMMONLY USED SYMBOLS FOR UNITED STATES CUSTOMARY UNITS OF MEASUREMENT:

| SYMBOL | DEFINITIONS |
|---|---|
| Ω | OHMS |
| min | MINUTE |
| s | SECOND |
| bps | BITS PER SECOND |
| Bps | BYTES PER SECOND |
| A | AMPERE |
| V | VOLT |
| V(dc) | VOLT (DIRECT CURRENT) |
| V(ac) | VOLT (ALTERNATING CURRENT) |
| FC | FOOT - CANDLE |
| W | WATTS |
| VA | VOLT-AMPERE |
| M | MEGA |
| k | KILO |
| m | MILLI |
| μ | MICRO |
| P | PICO |
| Hz | HERTZ |

## MISCELLANEOUS ELECTROLIERS

| NEW | EXISTING | |
|---|---|---|
| | | LUMINAIRE ON WOOD POLE |
| | | NON-STANDARD ELECTROLIER (SEE PROJECT LEGEND) |
| | | CITY ELECTROLIER |
| | | ELECTROLIER FOUNDATION (FUTURE INSTALLATION) |

NOTES:

1. LED luminaires shall be 235 W when installed on Type 21, 21D, 30, 31 and 32 Standards, unless otherwise specified. LED luminaires shall be 165 W when installed on other type standards or poles, unless otherwise specified.
2. Luminaires shall be the cutoff type, ANSI Type III medium cutoff lighting distribution, unless otherwise specified.

## STANDARD ELECTROLIER

| NEW | EXISTING | STANDARD TYPE |
|---|---|---|
| | | 15 |
| | | 15D |
| | | 15 STRUCTURE |
| | | 15D STRUCTURE |
| | | 21 |
| | | 21D |
| | | 21 STRUCTURE |
| | | 21D STRUCTURE |
| | | 30 |
| | | 31 |
| | | 32 |

STATE OF CALIFORNIA
DEPARTMENT OF TRANSPORTATION

# ELECTRICAL SYSTEMS (LEGEND AND ABBREVIATIONS)

NO SCALE

RSP ES-1A DATED OCTOBER 30, 2015 SUPERSEDES RSP ES-1A DATED JULY 19, 2013 AND STANDARD PLAN ES-1A DATED MAY 20, 2011 - PAGE 425 OF THE STANDARD PLANS BOOK DATED 2010.

**REVISED STANDARD PLAN RSP ES-1A**

**2010 REVISED STANDARD PLAN RSP ES-1A**

P:\PROJ\01\41500\drafting\sheets\0113000127va036.dgn

9-29-15

| DIST | COUNTY | ROUTE | POST MILES TOTAL PROJECT | SHEET NO. | TOTAL SHEETS |
|---|---|---|---|---|---|
| 01 | Hum | 101 | 109.5/R125.8 | 79 | 100 |

Theresa Gabriel
REGISTERED ELECTRICAL ENGINEER

October 30, 2015
PLANS APPROVAL DATE

REGISTERED PROFESSIONAL ENGINEER Theresa Aziz Gabriel No. E15129 Exp. 6-30-16 ELECTRICAL STATE OF CALIFORNIA

*THE STATE OF CALIFORNIA OR ITS OFFICERS OR AGENTS SHALL NOT BE RESPONSIBLE FOR THE ACCURACY OR COMPLETENESS OF SCANNED COPIES OF THIS PLAN SHEET.*

TO ACCOMPANY PLANS DATED May 23, 2016

## CONDUIT

| NEW | EXISTING | |
|---|---|---|
| | | LIGHTING CONDUIT, UNLESS OTHERWISE INDICATED OR NOTED |
| | | TRAFFIC SIGNAL CONDUIT |
| C | c | COMMUNICATION CONDUIT |
| T | t | TELEPHONE CONDUIT |
| F | f | FIRE ALARM CONDUIT |
| FO | fo | FIBER OPTIC CONDUIT |
| | | CONDUIT TERMINATION |
| R | r | CONDUIT RISER ATTACHED TO THE STRUCTURE OR SERVICE POLE |

## SERVICE EQUIPMENT

| NEW | EXISTING | |
|---|---|---|
| OH | oh | OVERHEAD LINES |
| U | U | WOOD POLE, "U" INDICATES UTILITY OWNED |
| | | POLE GUY WITH ANCHOR |
| | | UTILITY TRANSFORMER - GROUND MOUNTED |
| III | III | SERVICE EQUIPMENT ENCLOSURE TYPE. DOOR INDICATES FRONT OF ENCLOSURE |
| T | t | TELEPHONE DEMARCATION CABINET |

## POLE-MOUNTED SERVICE DESIGNATION

| | |
|---|---|
| TYPE H SERVICE, 28'-10" | TYPE OF INSTALLATION AND POLE HEIGHT ABOVE GRADE |

## FLASHING BEACON

| NEW | EXISTING | |
|---|---|---|
| R | R | FLASHING BEACON (ONE VEHICLE SIGNAL HEAD WITH BACKPLATE AND VISOR) "R" INDICATES RED INDICATION, "Y" INDICATES YELLOW INDICATION |
| Y Y | Y Y | FLASHING BEACON WITH TYPE 15-FBS STANDARD AND A SIGN. |
| R R | R R | FLASHING BEACON WITH TYPES 9, 9A OR 9B SIGN UNLESS OTHERWISE SPECIFIED OR INDICATED |

## SIGNAL EQUIPMENT

| NEW | EXISTING | |
|---|---|---|
| | | PEDESTRIAN SIGNAL HEAD |
| | | PUSH BUTTON ASSEMBLY POST |
| | | PEDESTRIAN BARRICADE |
| | | VEHICLE SIGNAL HEAD (WITH BACKPLATE AND 3-SECTIONS: RED, YELLOW AND GREEN) |
| | | VEHICLE SIGNAL HEAD WITH ANGLE VISOR |
| PV | PV | MODIFICATIONS OF BASIC SYMBOL: "L" INDICATES ALL NON-ARROW SECTIONS LOUVERED "LG" INDICATES LOUVERED GREEN SECTION ONLY "PV" INDICATES ALL 12" SECTIONS PROGRAMMED VISIBILITY "8" INDICATES ALL 8" SECTIONS (ONLY WHEN SPECIFIED) |
| | | VEHICLE SIGNAL HEAD CONSISTING OF RED, YELLOW AND GREEN LEFT ARROW SECTIONS |
| | | VEHICLE SIGNAL HEAD CONSISTING OF RED AND YELLOW SECTIONS WITH AN UP GREEN ARROW SECTION |
| | | VEHICLE SIGNAL HEAD (5 SECTION) CONSISTING OF RED, YELLOW AND GREEN SECTIONS WITH YELLOW AND GREEN RIGHT ARROW SECTIONS |
| | | TYPE 15TS STANDARD WITH VEHICLE SIGNAL HEAD AND LUMINAIRE |
| | | TYPE 21TS STANDARD WITH VEHICLE SIGNAL HEAD AND LUMINAIRE |
| | | STANDARD WITH LUMINAIRE AND SIGNAL MAST ARMS AND ATTACHED VEHICLE SIGNAL HEADS |
| | | TYPE 1 STANDARD WITH ATTACHED VEHICLE SIGNAL HEADS |
| | | STANDARD WITH A SIGNAL MAST ARM, ATTACHED VEHICLE SIGNAL HEADS AND INTERNALLY ILLUMINATED STREET NAME SIGN |
| | | CONTROLLER ASSEMBLY. DOOR INDICATES FRONT OF CABINET |

## SIGNAL EQUIPMENT Cont

| NEW | EXISTING | |
|---|---|---|
| | | GUARD POST |
| | | TYPE 1 STANDARD WITH RAMP METERING SIGN |
| | | OPTICAL DETECTOR FOR THE EMERGENCY VEHICLE DETECTION |

### NOTES:

1. All signal sections shall be 12" unless shown otherwise.
2. Signal heads shall be provided with backplates unless shown otherwise.

## ILLUMINATED OVERHEAD SIGN

| NEW | EXISTING | |
|---|---|---|
| | | SINGLE POST, SINGLE ILLUMINATED SIGN, BALANCED BUTTERFLY |
| | | SINGLE POST, DOUBLE ILLUMINATED SIGN, BALANCED BUTTERFLY |
| | | SINGLE POST, SINGLE ILLUMINATED SIGN, FULL CANTILEVER |
| | | DOUBLE POST, SINGLE ILLUMINATED SIGN |
| | | SINGLE ILLUMINATED SIGN MOUNTED ON STRUCTURE |
| | | DOUBLE POST, SINGLE ILLUMINATED SIGN WITH ELECTROLIER |

STATE OF CALIFORNIA
DEPARTMENT OF TRANSPORTATION

# ELECTRICAL SYSTEMS (LEGEND AND ABBREVIATIONS)

NO SCALE

RSP ES-1B DATED OCTOBER 30, 2015 SUPERSEDES RSP ES-1B DATED JULY 19, 2013 AND STANDARD PLAN ES-1B DATED MAY 20, 2011 - PAGE 426 OF THE STANDARD PLANS BOOK DATED 2010.

**REVISED STANDARD PLAN RSP ES-1B**

**2010 REVISED STANDARD PLAN RSP ES-1B**

P:\PROJ\01\41500\drafting\sheets\0113000127va037.dgn

8-19-15

| DIST | COUNTY | ROUTE | POST MILES TOTAL PROJECT | SHEET NO. | TOTAL SHEETS |
|---|---|---|---|---|---|
| 01 | Hum | 101 | 109.5/R125.8 | 80 | 100 |

Theresa Gabriel
REGISTERED ELECTRICAL ENGINEER

April 15, 2016
PLANS APPROVAL DATE

REGISTERED PROFESSIONAL ENGINEER Theresa Aziz Gabriel No. E15129 Exp. 6-30-16 ELECTRICAL STATE OF CALIFORNIA

*THE STATE OF CALIFORNIA OR ITS OFFICERS OR AGENTS SHALL NOT BE RESPONSIBLE FOR THE ACCURACY OR COMPLETENESS OF SCANNED COPIES OF THIS PLAN SHEET.*

TO ACCOMPANY PLANS DATED May 23, 2016

## EQUIPMENT IDENTIFICATION

### ILLUMINATED SIGN IDENTIFICATION:

SIGN No. 12345 — SIGN EQUIPMENT IDENTIFICATION CHARACTERS - PLACE ON POST OR STRUCTURE

10 ISL SCI 1.0

- 1.0 — TRANSFORMER RATING (kVA)
- SCI — LIGHTING CONTROL TYPE
- 10 ISL — NUMBER AND TYPE OF FIXTURES

DO NOT PLACE ON STANDARD OR STRUCTURE

### ELECTROLIER OR EQUIPMENT IDENTIFICATION:

L2745 - 15'-0"

- 15'-0" — MAST ARM LENGTH, IF SHOWN. DO NOT PLACE ON STANDARD OR STRUCTURE
- L2745 — EQUIPMENT IDENTIFICATION CHARACTERS - PLACE ON STANDARD OR STRUCTURE. EXISTING EQUIPMENT IDENTIFICATION CHARACTERS ARE SHOWN IN PARENTHESIS

### CONDUIT AND CONDUCTOR IDENTIFICATION:

1½"C, 2#10, 15#14, 2 DLC, 12P#18 (PAIR)

- 2#10, 15#14, 2 DLC, 12P#18 — NUMBER AND SIZE OF CONDUCTORS AND CABLES
- 1½"C — SIZE OF CONDUIT IN INCHES

| | |
|---|---|
| Ø1, Ø2, Ø2P, etc. | TRAFFIC PHASE IDENTIFICATION FOR SIGNALS, DETECTORS AND PHASE DIAGRAMS |
| 1 2 3 | LEGEND NUMBERS |
| A B C | EQUIPMENT, SIGNAL POLES, INSTALLATION OR ITEMS |
| 1 2 3 | CONDUIT RUN NUMBERS |

### SIGNAL AND LIGHTING STANDARD (TYPICAL DESIGNATION):

19A - 3 - 100

- 100 — WIND VELOCITY = 100 mph
- 3 — CASE 3 ARM LOADING
- 19A — STANDARD TYPE
- STANDARD PLAN SHEET NUMBER
- DETAIL, NUMBER, SECTION, TYPE OR ELEVATION

## MISCELLANEOUS EQUIPMENT

| NEW | EXISTING | |
|---|---|---|
| CMS | cms | CHANGEABLE MESSAGE SIGN |
| | | CLOSED CIRCUIT TELEVISION CAMERA |
| | | HIGHWAY ADVISORY RADIO POLE AND ANTENNA |
| EMS | ems | LED EXTINGUISHABLE MESSAGE SIGN |
| M V | m v | DETECTION DEVICE<br>M = MICROWAVE SENSOR<br>V = VIDEO IMAGE SENSOR |

## WIRING DIAGRAM LEGEND

- EXTERNAL CONDUCTOR
- CONDUCTOR OR BUS
- TIE POINT
- CONTACTOR COIL
- CONTACTOR, NO CONTACT
- TERMINAL BLOCKS
- CONTACTOR, NC CONTACT
- ENCLOSURE BOND
- GROUNDING ELECTRODE
- CIRCUIT BREAKER
- RECEPTACLE

## PULL BOXES

| NEW | EXISTING | |
|---|---|---|
| | | PULL BOX, No. 5 UNLESS OTHERWISE INDICATED OR NOTED |
| 3 | 9A(21) | PULL BOX, ADDITIONAL DESIGNATIONS OR DESCRIPTIONS |

3 No. 3½ PULL BOX
5 No. 5 PULL BOX
6 No. 6 PULL BOX
7 No. 7 PULL BOX (CEILING)
8 No. 8 PULL BOX
9 No. 9 PULL BOX (STRUCTURE)
9A No. 9A PULL BOX (STRUCTURE)

(C) COMMUNICATIONS PULL BOX
(E) PULL BOX WITH EXTENSION
(S) SPRINKLER CONTROL PULL BOX
(21) ANCHOR BOLTS AND CONDUIT FOR FUTURE INSTALLATION OF TYPE 21 STANDARD
(T) TRAFFIC PULL BOX

## VEHICLE DETECTORS

VEHICLE DETECTOR DESIGNATION

5 J 9 U

- U = UPPER, L = LOWER
- SLOT NUMBER IN INPUT FILE
- INPUT FILE (I OR J)
- PHASE

| NEW | EXISTING | |
|---|---|---|
| | | TYPE A LOOP DETECTOR. OUTLINE OF SAW CUT SHOWN |
| | | TYPE B LOOP DETECTOR. OUTLINE OF SAW CUT SHOWN |
| | | TYPE C LOOP DETECTOR. OUTLINE OF SAW CUT SHOWN |
| | | TYPE D LOOP DETECTOR. OUTLINE OF SAW CUT SHOWN |
| | | TYPE E LOOP DETECTOR. OUTLINE OF SAW CUT SHOWN |
| | | TYPE Q LOOP DETECTOR. OUTLINE OF SAW CUT SHOWN |
| DH | dh | DETECTOR HANDHOLE |
| | | MICROWAVE OR VIDEO DETECTION ZONE |

STATE OF CALIFORNIA
DEPARTMENT OF TRANSPORTATION

# ELECTRICAL SYSTEMS (LEGEND AND ABBREVIATIONS)

NO SCALE

RSP ES-1C DATED APRIL 15, 2016 SUPERSEDES RSP ES-1C DATED OCTOBER 30, 2015 AND RSP ES-1C DATED JULY 19, 2013 AND STANDARD PLAN ES-1C DATED MAY 20, 2011 - PAGE 427 OF THE STANDARD PLANS BOOK DATED 2010.

**REVISED STANDARD PLAN RSP ES-1C**

**2010 REVISED STANDARD PLAN RSP ES-1C**

P:\PROJ\01\41500\drafting\sheets\0113000127va038.dgn

1-22-16

| DIST | COUNTY | ROUTE | POST MILES TO AL PROJEC | SHEET NO. | TOTAL SHEETS |
|---|---|---|---|---|---|
| 01 | Hum | 101 | 109.5/R125.8 | 81 | 100 |

Theresa Gabriel
REGISTERED ELECTRICAL ENGINEER

October 30, 2015
PLANS APPROVAL DATE

REGISTERED PROFESSIONAL ENGINEER Theresa Aziz Gabriel No. E15129 Exp. 6-30-16 ELECTRICAL STATE OF CALIFORNIA

THE STATE OF CALIFORNIA OR ITS OFFICERS OR AGENTS SHALL NOT BE RESPONSIBLE FOR THE ACCURACY OR COMPLETENESS OF SCANNED COPIES OF THIS PLAN SHEET.

TO ACCOMPANY PLANS DATED May 23, 2016

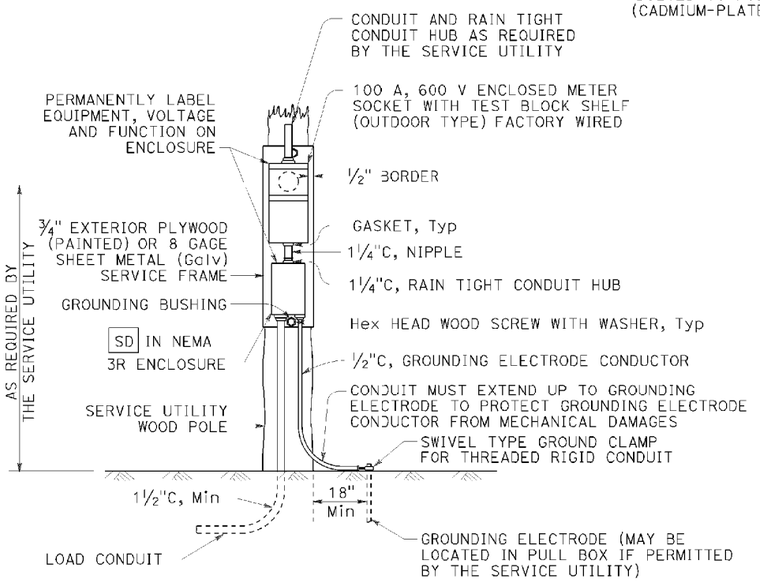


TYPE SCE-1
DETAIL A

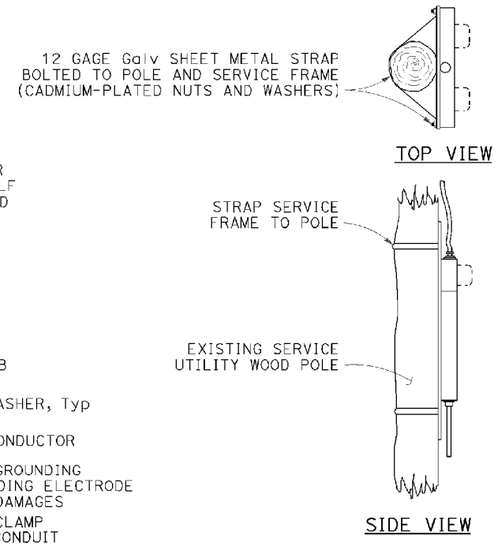


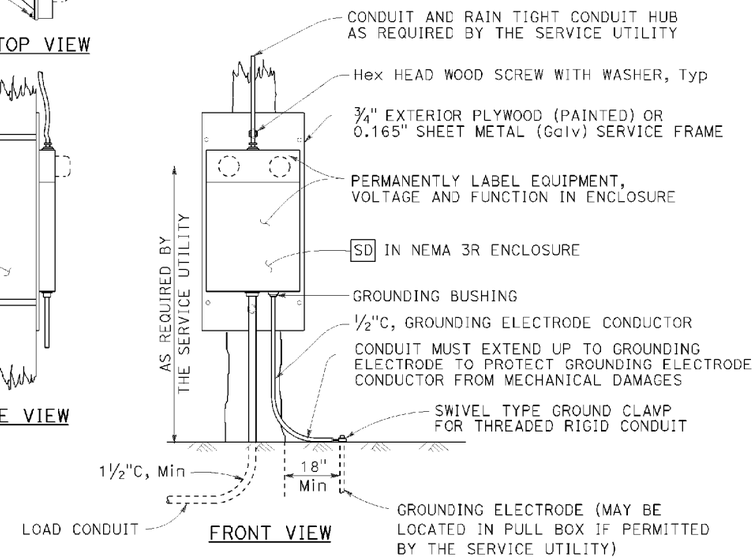


TYPE SCE-2
DETAIL B

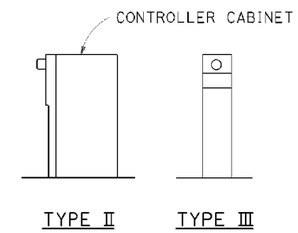


TYPE OF SERVICE (TYPICAL)
DETAIL C
See Notes 1 and 2

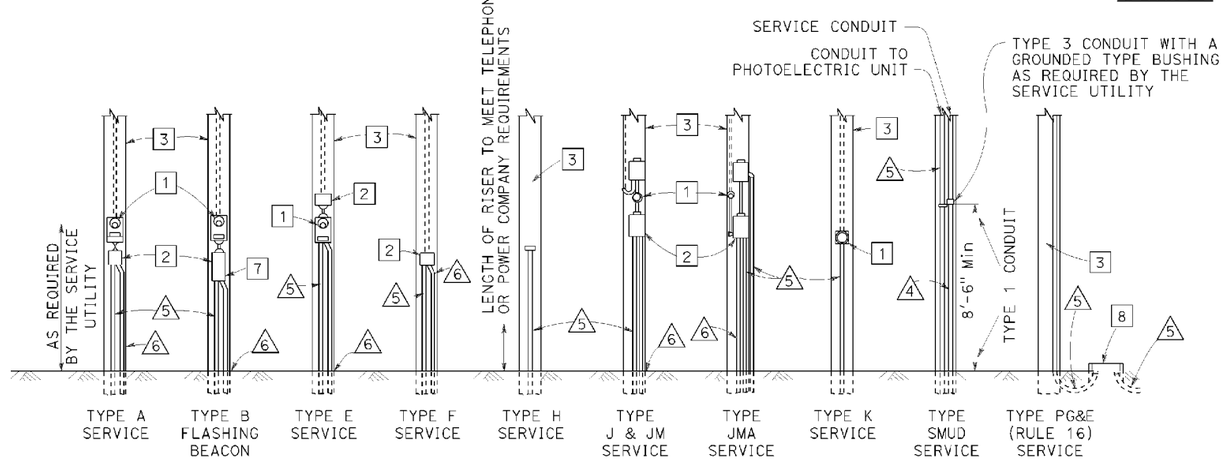


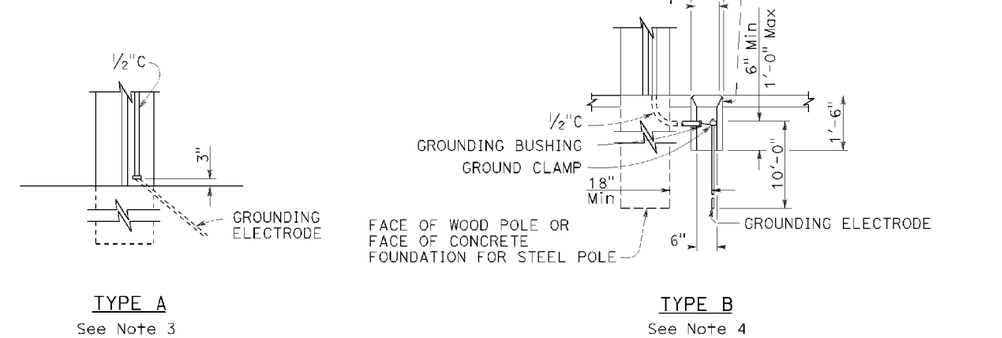


SERVICE GROUNDING
DETAIL E

LEGEND:

1. METER SOCKET.
2. SERVICE ENCLOSURE WITH A MINIMUM 60 A RATED MAIN CIRCUIT BREAKER, UNLESS OTHERWISE SHOWN.
3. A. UTILITY OWNED POLE. THE SERVICE UTILITY WILL FURNISH AND INSTALL REQUIRED SERVICE RISER, PEU WITH CONDUCTORS AND OTHER EQUIPMENT AS NEEDED.
   B. STATE OWNED POLE. THE CONTRACTOR SHALL FURNISH AND INSTALL REQUIRED SERVICE RISER AND EQUIPMENT.
4. 2"C, SERVICE CONDUIT MUST HAVE A GROUNDED TYPE BUSHING INSTALLED AT UPPER END OF THE METALLIC POLE RISER CONDUIT. A GROUNDING CONDUCTOR MUST BE ATTACHED TO THE BUSHING, CARRIED THROUGH THE CONDUIT RUN AND ATTACHED TO THE SERVICE EQUIPMENT ENCLOSURE'S GROUNDING ELECTRODE.
5. CONDUIT, LENGTH AND SIZE AS REQUIRED.
6. ½"C, 1#6. SEE DETAIL E.
7. FLASHING BEACON CONTROL ASSEMBLY.
8. SERVICE PULL BOX, No. 5 UNLESS OTHERWISE NOTED, FURNISHED AND INSTALLED BY THE CONTRACTOR. SERVICE UTILITY SHALL DETERMINE THE EXACT LOCATION.

POLE MOUNTED SERVICE INSTALLATIONS
DETAIL D

NOTES:

1. Type II service equipment enclosure mounted on the side of a controller cabinet.
2. Type III complete free-standing service equipment enclosure.
3. Ground clamp and required fittings must be accessible. Conduit must extend to protect grounding electrode conductor from mechanical damage.
4. Use where service utility requires 18" clearance between grounding electrode and the pole or service equipment enclosure. Installation shown is for sidewalk or paved areas. In unpaved areas, omit special service pull box and locate ground clamp above ground or locate ground clamp in nearest pull box.

STATE OF CALIFORNIA
DEPARTMENT OF TRANSPORTATION

# ELECTRICAL SYSTEMS (SERVICE EQUIPMENT)

NO SCALE

RSP ES-2A DATED OCTOBER 30, 2015 SUPERSEDES STANDARD PLAN ES-2A DATED MAY 20, 2011 - PAGE 428 OF THE STANDARD PLANS BOOK DATED 2010.

**REVISED STANDARD PLAN RSP ES-2A**

2010 REVISED STANDARD PLAN RSP ES-2A

P:\PROJ\01\41500\drafting\sheets\0113000127va039.dgn

8 20 5

| DIST | COUNTY | ROUTE | POST MILES TOTAL PROJECT | SHEET NO. | TOTAL SHEETS |
|---|---|---|---|---|---|
| 01 | Hum | 101 | 109.5/R125.8 | 82 | 100 |

Theresa Gabriel
REGISTERED ELECTRICAL ENGINEER

October 30, 2015
PLANS APPROVAL DATE

REGISTERED PROFESSIONAL ENGINEER
Theresa Aziz Gabriel
No. E15129
Exp. 6-30-16
ELECTRICAL
STATE OF CALIFORNIA

*THE STATE OF CALIFORNIA OR ITS OFFICERS OR AGENTS SHALL NOT BE RESPONSIBLE FOR THE ACCURACY OR COMPLETENESS OF SCANNED COPIES OF THIS PLAN SHEET.*

TO ACCOMPANY PLANS DATED May 23, 2016

2010 REVISED STANDARD PLAN RSP ES-2C

NOTES:

1. The plan shows the approximate location of devices within the enclosure. Components may be rearranged, however, the "working" clearances within the service equipment enclosure shall be maintained.

2. In unpaved areas a raised portland cement concrete pad 2'-0" x 4" x width of foundation shall be constructed in front of new service equipment enclosure installation. Pad shall be set to elevation of foundation.

3. Plug-in circuit breakers may be mounted in the vertical or horizontal position. Cable-in/cable-out circuit breakers shall be mounted in the vertical position.

4. Type III-AF and Type III-BF service equipment enclosures shall have the meter viewing windows located on the front side of the service equipment enclosures.

5. Type III-AR and Type III-BR service equipment enclosure shall be similarly constructed as Type III-AF and Type III-BF respectively, except the meter viewing windows shall be located on the back side of the service equipment enclosures.

STATE OF CALIFORNIA
DEPARTMENT OF TRANSPORTATION

# ELECTRICAL SYSTEMS (SERVICE EQUIPMENT ENCLOSURE NOTES TYPE III SERIES)

NO SCALE

RSP ES-2C DATED OCTOBER 30, 2015 SUPERSEDES STANDARD PLAN ES-2C DATED MAY 20, 2011 - PAGE 430 OF THE STANDARD PLANS BOOK DATED 2010.

**REVISED STANDARD PLAN RSP ES-2C**

P:\PROJ\01\41500\drafting\sheets\0113000127va040.dgn

8-19-15

| DIST | COUNTY | ROUTE | POST MILES TOTAL PROJECT | SHEET NO. | TOTAL SHEETS |
|---|---|---|---|---|---|
| 01 | Hum | 101 | 109.5/R125.8 | 83 | 100 |

Theresa Gabriel
REGISTERED ELECTRICAL ENGINEER

October 30, 2015
PLANS APPROVAL DATE

REGISTERED PROFESSIONAL ENGINEER Theresa Aziz Gabriel No. E15129 Exp. 6-30-16 ELECTRICAL STATE OF CALIFORNIA

THE STATE OF CALIFORNIA OR ITS OFFICERS OR AGENTS SHALL NOT BE RESPONSIBLE FOR THE ACCURACY OR COMPLETENESS OF SCANNED COPIES OF THIS PLAN SHEET.

TO ACCOMPANY PLANS DATED May 23, 2016

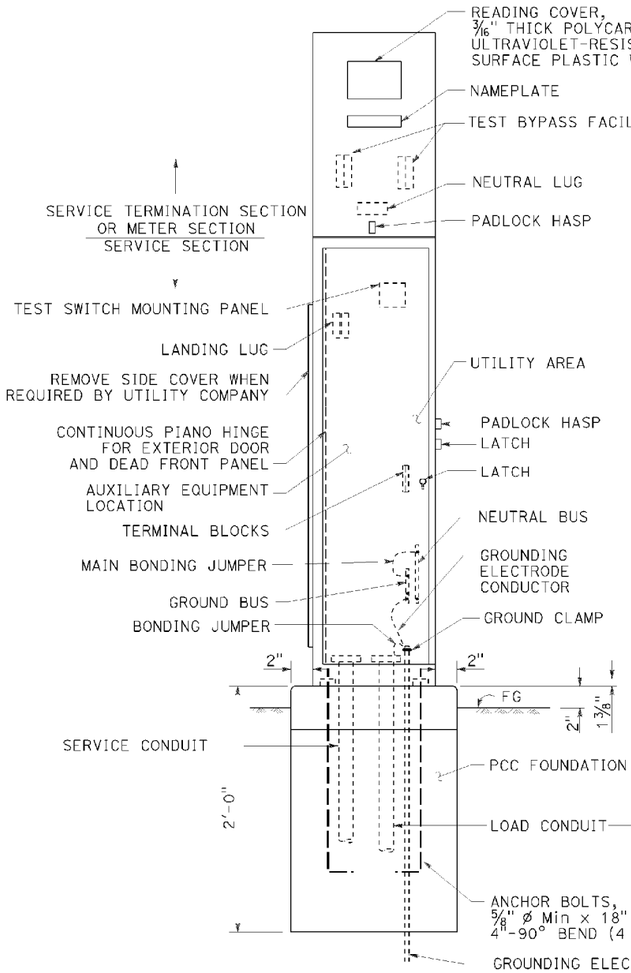


FRONT VIEW

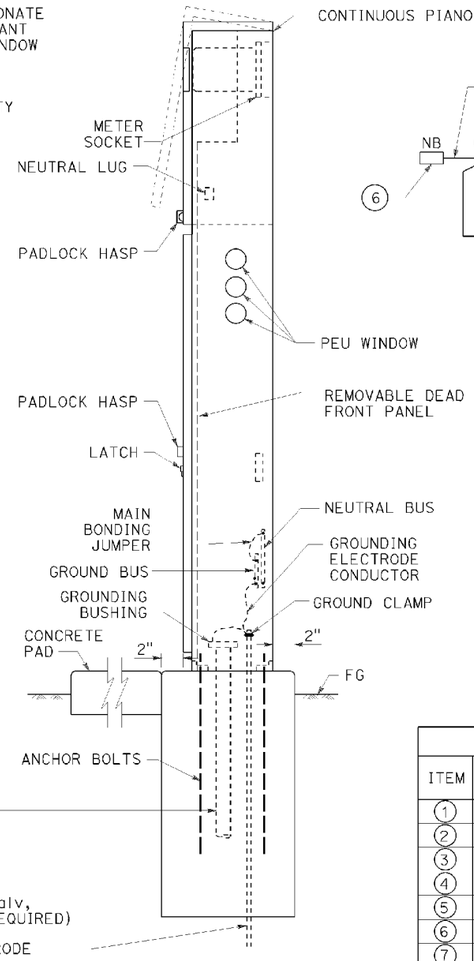


SIDE VIEW

## TYPE III-AF SERVICE EQUIPMENT ENCLOSURE (TYPICAL)

DETAIL A

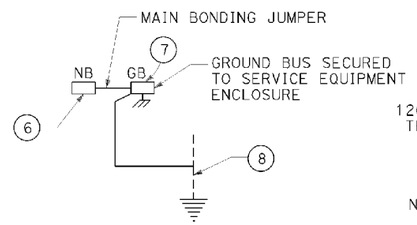


DETAIL D

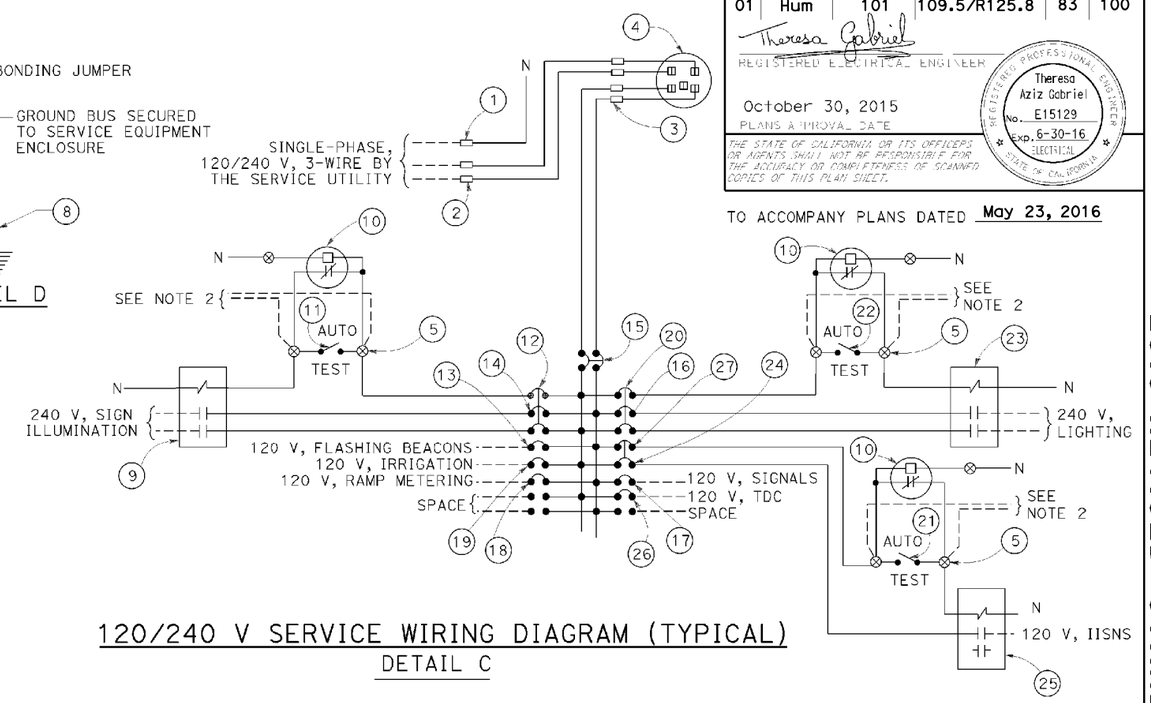


## 120/240 V SERVICE WIRING DIAGRAM (TYPICAL)

DETAIL C

| TYPE III-A SERVICE EQUIPMENT ENCLOSURE LEGEND (120/240 V) | | | | | |
|---|---|---|---|---|---|
| ITEM | COMPONENT | NAMEPLATE DESCRIPTION | ITEM | COMPONENT | NAMEPLATE DESCRIPTION |
| 1 | NEUTRAL LUG | | 14 | 30 A, 240 V, 2P, CB | SIGN ILLUMINATION |
| 2 | LANDING LUG | | 15 | 100 A, 240 V, 2P, CB | MAIN BREAKER |
| 3 | TEST BYPASS FACILITY | | 16 | 30 A, 240 V, 2P, CB | LIGHTING |
| 4 | METER SOCKET AND SUPPORT | | 17 | 50 A, 120 V, 1P, CB | SIGNALS |
| 5 | TERMINAL BLOCKS | | 18 | 30 A, 120 V, 1P, CB | RAMP METERING |
| 6 | NEUTRAL BUS | | 19 | 20 A, 120 V, 1P, CB | IRRIGATION |
| 7 | GROUND BUS | | 20 | 15 A, 120 V, 1P, CB | LIGHTING CONTROL |
| 8 | GROUNDING ELECTRODE | | 21 | 15 A, 1P, TEST SWITCH | IISNS TEST SWITCH |
| 9 | 30 A, 2P, NO CONTACTOR | SIGN ILLUMINATION | 22 | 15 A, 1P, TEST SWITCH | LIGHTING TEST SWITCH |
| 10 | PHOTOELECTRIC UNIT (NOTE 4) | PEU | 23 | 60 A, 2P, NO CONTACTOR | LIGHTING |
| 11 | 15 A, 1P, TEST SWITCH | SIGN ILLUMINATION TEST SWITCH | 24 | 15 A, 120 V, 1P, CB | IISNS |
| 12 | 15 A, 120 V, 1P, CB | SIGN ILLUMINATION CONTROL | 25 | 30 A, 2P, NO CONTACTOR | IISNS |
| 13 | 15 A, 120 V, 1P, CB | FLASHING BEACON | 26 | 20 A, 120 V, 1P, CB | TELEPHONE DEMARCATION CABINET |
| | | | 27 | 15 A, 120 V, 1P, CB | IISNS CONTROL |

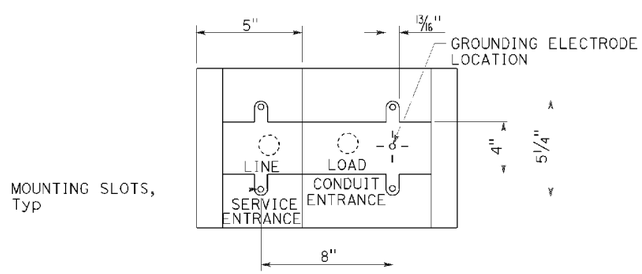


## BASE FOR TYPE III-A SERVICE EQUIPMENT ENCLOSURE

DETAIL B

NOTES:

1. Unless otherwise indicated on the plans, service equipment items shall be provided for each service equipment enclosure as shown.
2. Connect to remote test switch mounted on lighting standards, sign post or structure when required.
3. Items 1 and 6 shall be isolated from the service equipment enclosure.
4. Type V photoelectric control shall be used unless otherwise indicated on the plans.
5. Item 12, 20 and 27 shall be ganged operated CB.

STATE OF CALIFORNIA
DEPARTMENT OF TRANSPORTATION

# ELECTRICAL SYSTEMS (SERVICE EQUIPMENT ENCLOSURE AND TYPICAL WIRING DIAGRAM, TYPE III-A SERIES)

NO SCALE

RSP ES-2D DATED OCTOBER 30, 2015 SUPERSEDES STANDARD PLAN ES-2D DATED MAY 20, 2011 - PAGE 431 OF THE STANDARD PLANS BOOK DATED 2010.

**REVISED STANDARD PLAN RSP ES-2D**

2010 REVISED STANDARD PLAN RSP ES-2D

P:\PROJ\01\41500\drafting\sheets\0113000127va041.dgn

8-20-15

| DIST | COUNTY | ROUTE | POST MILES TOTAL PROJECT | SHEET NO. | TOTAL SHEETS |
|---|---|---|---|---|---|
| 01 | Hum | 101 | 109.5/R125.8 | 84 | 100 |

Theresa Gabriel
REGISTERED ELECTRICAL ENGINEER

April 15, 2016
PLANS APPROVAL DATE

REGISTERED PROFESSIONAL ENGINEER
Theresa Aziz Gabriel
No. E15129
Exp. 6-30-16
ELECTRICAL
STATE OF CALIFORNIA

THE STATE OF CALIFORNIA OR ITS OFFICERS OR AGENTS SHALL NOT BE RESPONSIBLE FOR THE ACCURACY OR COMPLETENESS OF SCANNED COPIES OF THIS PLAN SHEET.

TO ACCOMPANY PLANS DATED May 23, 2016

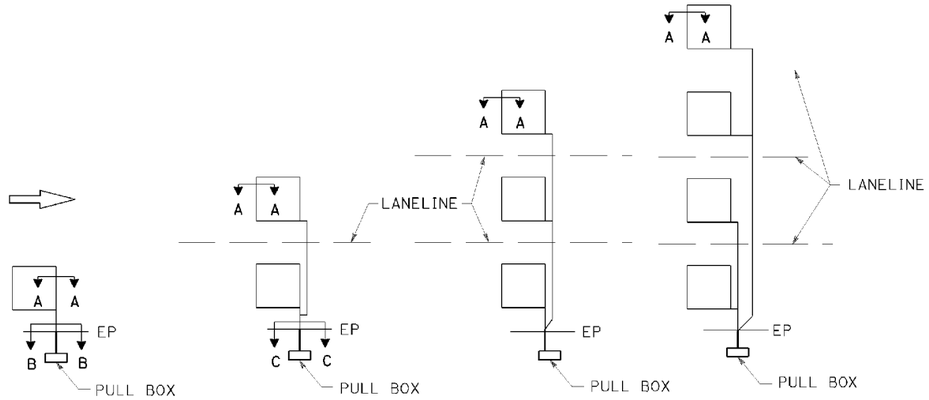


## SAW CUT DETAILS

Type A loop detector configurations illustrated

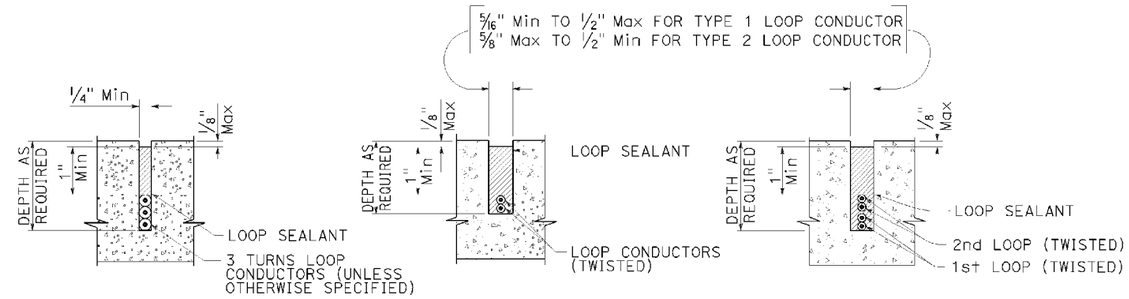


SECTION A-A SECTION B-B SECTION C-C

## SLOT DETAILS - TYPE 1 AND TYPE 2 LOOP CONDUCTOR

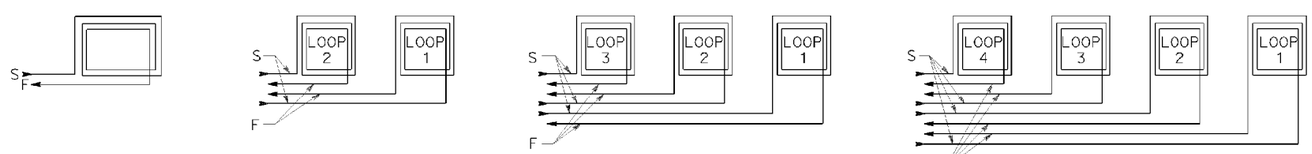


## WINDING DETAILS

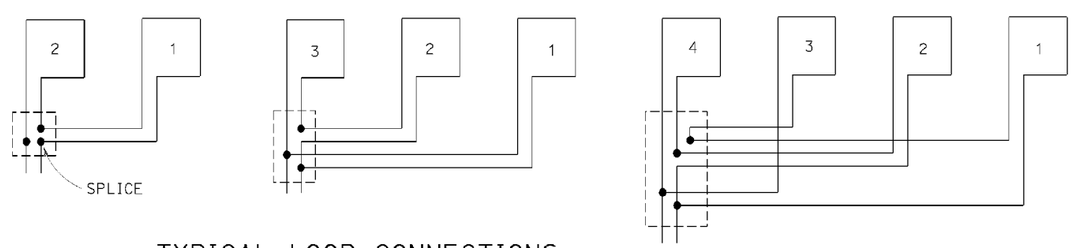


## TYPICAL LOOP CONNECTIONS

Dashed lines represent the pull box

ABBREVIATIONS:

S - START
F - FINISH

STATE OF CALIFORNIA
DEPARTMENT OF TRANSPORTATION

# ELECTRICAL SYSTEMS (LOOP DETECTORS)

NO SCALE

RSP ES-5A DATED APRIL 15, 2016 SUPERSEDES RSP ES-5A DATED OCTOBER 30, 2015 AND STANDARD PLAN ES-5A DATED MAY 20, 2011 - PAGE 448 OF THE STANDARD PLANS BOOK DATED 2010.

**REVISED STANDARD PLAN RSP ES-5A**

**2010 REVISED STANDARD PLAN RSP ES-5A**

P:\PROJ\01\41500\drafting\sheets\0113000127va042.dgn

1-12-16

| DIST | COUNTY | ROUTE | POST MILES TOTAL PROJECT | SHEET NO. | TOTAL SHEETS |
|---|---|---|---|---|---|
| 01 | Hum | 101 | 109.5/R125.8 | 85 | 100 |

Theresa Gabriel
REGISTERED ELECTRICAL ENGINEER

April 15, 2016
PLANS APPROVAL DATE

REGISTERED PROFESSIONAL ENGINEER
Theresa Aziz Gabriel
No. E15129
Exp. 6-30-16
ELECTRICAL
STATE OF CALIFORNIA

THE STATE OF CALIFORNIA OR ITS OFFICERS OR AGENTS SHALL NOT BE RESPONSIBLE FOR THE ACCURACY OR COMPLETENESS OF SCANNED COPIES OF THIS PLAN SHEET.

TO ACCOMPANY PLANS DATED May 23, 2016

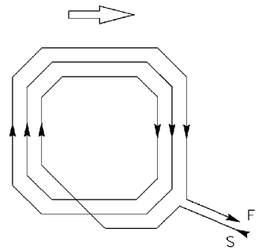


WINDING DETAIL

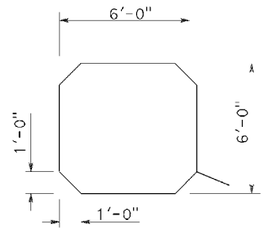


SAW CUT DETAIL

TYPE A LOOP DETECTOR CONFIGURATION

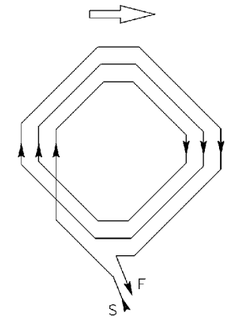


WINDING DETAIL

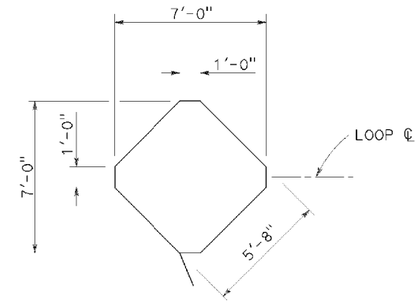


SAW CUT DETAIL

TYPE B LOOP DETECTOR CONFIGURATION

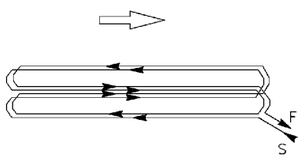


WINDING DETAIL

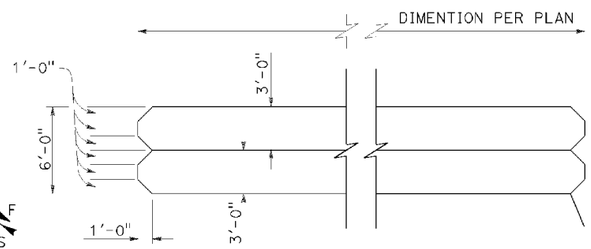


SAW CUT DETAIL

TYPE C LOOP DETECTOR CONFIGURATION

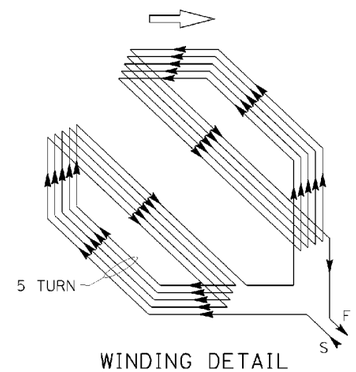


WINDING DETAIL

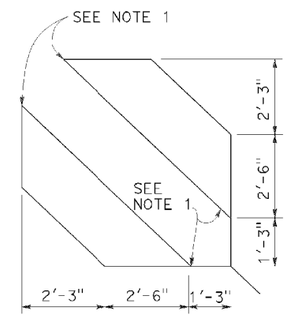


SAW CUT DETAIL

TYPE D LOOP DETECTOR CONFIGURATION

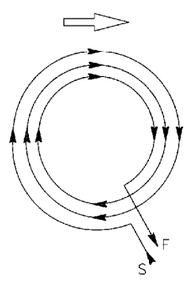


WINDING DETAIL

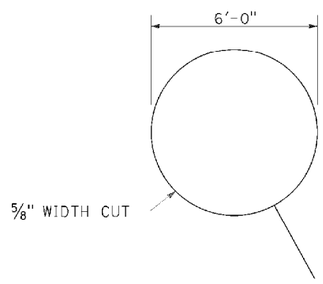


SAW CUT DETAIL

TYPE E LOOP DETECTOR CONFIGURATION

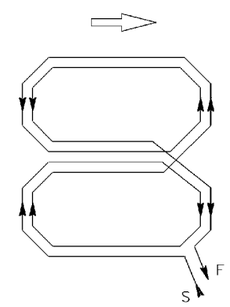


WINDING DETAIL

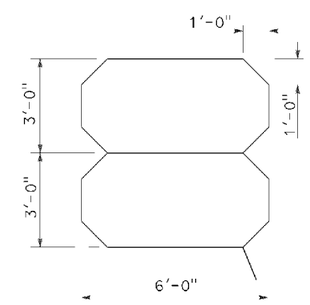


SAW CUT DETAIL

TYPE Q LOOP DETECTOR CONFIGURATION

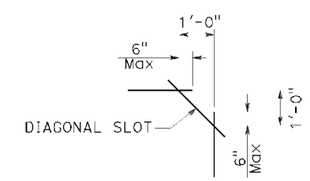


PLAN VIEW OF DIAGONAL SLOT AT CORNERS

NOTES:

1. Round corners of acute angle saw cuts to prevent damage to conductors.
2. Typical distance separating loops from edge to edge is 10' for Type A, B, D and E installation in single lane.
3. Use Type D loops for limit line detection and bicycle lanes.

STATE OF CALIFORNIA
DEPARTMENT OF TRANSPORTATION

# ELECTRICAL SYSTEMS (DETECTORS)

NO SCALE

RSP ES-5B DATED APRIL 15, 2016 SUPERSEDES RSP ES-5B DATED OCTOBER 30, 2015 AND RSP ES-5B DATED JULY 19, 2013 AND STANDARD PLAN ES-5B DATED MAY 20, 2011 - PAGE 449 OF THE STANDARD PLANS BOOK DATED 2010.

**REVISED STANDARD PLAN RSP ES-5B**

**2010 REVISED STANDARD PLAN RSP ES-5B**

P:\PROJ\01\41500\drafting\sheets\0113000127va043.dgn

| DIST | COUNTY | ROUTE | POST MILES TOTAL PROJECT | SHEET NO. | TOTAL SHEETS |
|---|---|---|---|---|---|
| 01 | Hum | 101 | 109.5/R125.8 | 86 | 100 |

Theresa Gabriel
REGISTERED ELECTRICAL ENGINEER

October 30, 2015
PLANS APPROVAL DATE

REGISTERED PROFESSIONAL ENGINEER Theresa Aziz Gabriel No. E15129 Exp. 6-30-16 ELECTRICAL STATE OF CALIFORNIA

*THE STATE OF CALIFORNIA OR ITS OFFICERS OR AGENTS SHALL NOT BE RESPONSIBLE FOR THE ACCURACY OR COMPLETENESS OF SCANNED COPIES OF THIS PLAN SHEET.*

TO ACCOMPANY PLANS DATED May 23, 2016

**2010 REVISED STANDARD PLAN RSP ES-5D**

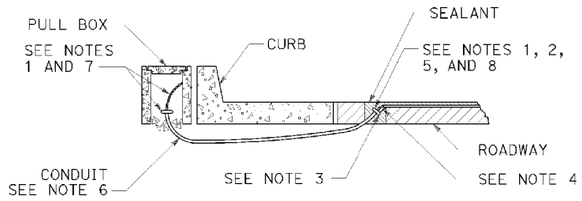


TYPE A
## CURB TERMINATION DETAIL

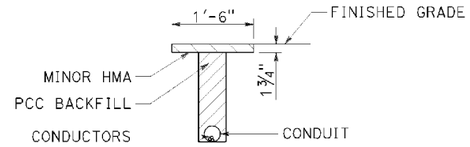


## "T" TRENCH
DETAIL T

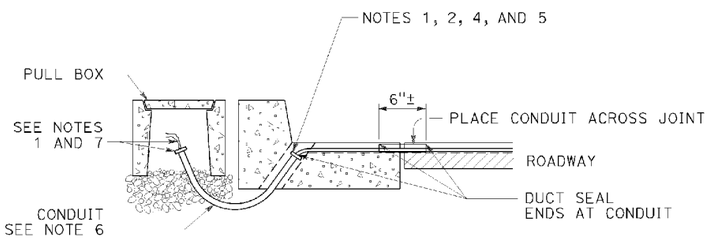


CROSS SECTION

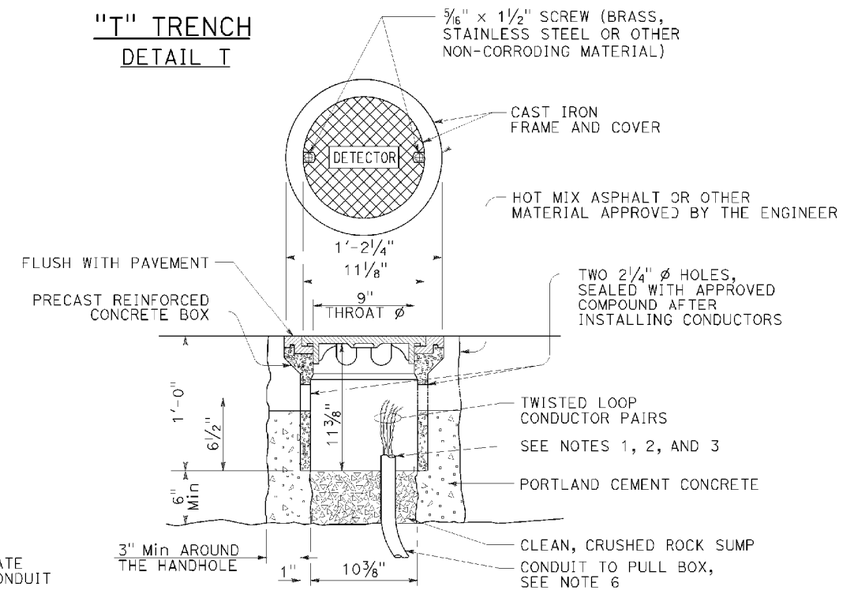


## DETECTOR HANDHOLE DETAIL

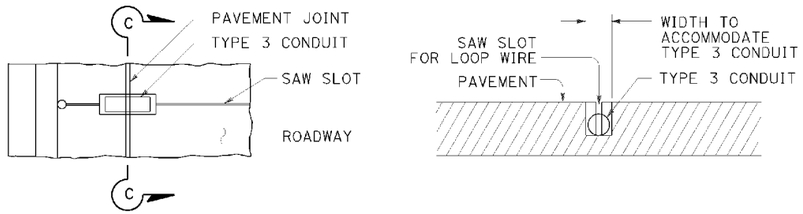


PLAN VIEW  SECTION C-C

TYPE B
## CURB TERMINATION DETAIL

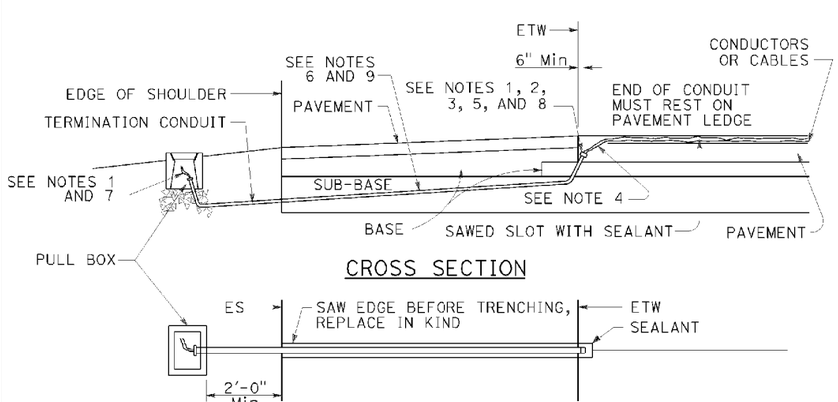


CROSS SECTION

PLAN VIEW
## SHOULDER TERMINATION DETAILS

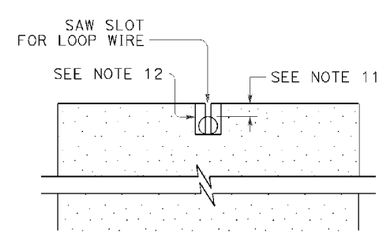


SECTION A-A

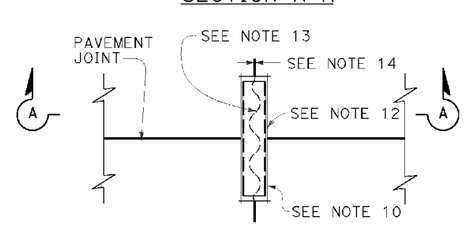


PLAN VIEW
## TYPICAL LOOP LEAD-IN DETAIL AT PAVEMENT JOINT

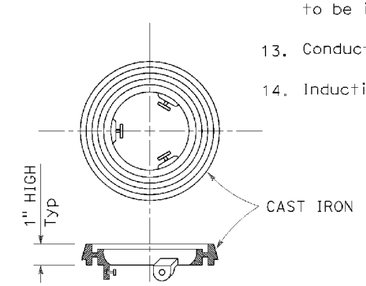


## LOCKING GRADE RING

## NOTES:

1. Bushing shall be used at end of conduit.
2. Tape detector conductors or cables 3" each side of bushings.
3. Install duct seal compound to each end of termination conduit before installing sealant.
4. Round all sharp edges where detector conductors or cables have to pass.
5. End of conduit shall be 3⅛" below roadway surface.
6. 

| Conduit size | Loop conductors |
|---|---|
| 1"C minimum | 1 to 2 pairs |
| 1½"C minimum | 3 to 4 pairs |
| 2"C minimum | 5 or more pairs |

7. Splice detector conductors or cables to detector lead-in-cable.
8. Location of detector handhole when shown on plans.
9. When the shoulder and traveled way are paved with the same material and there is no joint between them, the conduit shall extend only 2'-0" into the shoulder pavement.
10. ¾"C, Type 3 conduit 6" long minimum, plug both ends with duct compound to keep out sealant.
11. ½" Minimum between top of conduit and pavement surface.
12. Sawcut shall not exceed 1" in width and ⅛" longer than conduit to be installed.
13. Conductors with ½" minimum slack inside conduit.
14. Inductive loop detector saw slot.

STATE OF CALIFORNIA
DEPARTMENT OF TRANSPORTATION

# ELECTRICAL SYSTEMS (CURB AND SHOULDER TERMINATION, TRENCH, AND HANDHOLE DETAILS)

NO SCALE

RSP ES-5D DATED OCTOBER 30, 2015 SUPERSEDES RSP ES-5D DATED JULY 19, 2013 AND STANDARD PLAN ES-5D DATED MAY 20, 2011 - PAGE 451 OF THE STANDARD PLANS BOOK DATED 2010.

**REVISED STANDARD PLAN RSP ES-5D**

P:\PROJ\01\41500\drafting\sheets\0113000127va044.dgn

8-19-15

| DIST | COUNTY | ROUTE | POST MILES TOTAL PROJECT | SHEET No. | TOTAL SHEETS |
|---|---|---|---|---|---|
| 01 | Hum | 101 | 109.5/R125.8 | 87 | 100 |

REGISTERED CIVIL ENGINEER

October 30, 2015
PLANS APPROVAL DATE

REGISTERED PROFESSIONAL ENGINEER
Stanley P. Johnson
No. C57793
Exp. 3-31-16
CIVIL
STATE OF CALIFORNIA

THE STATE OF CALIFORNIA OR ITS OFFICERS OR AGENTS SHALL NOT BE RESPONSIBLE FOR THE ACCURACY OR COMPLETENESS OF SCANNED COPIES OF THIS PLAN SHEET.

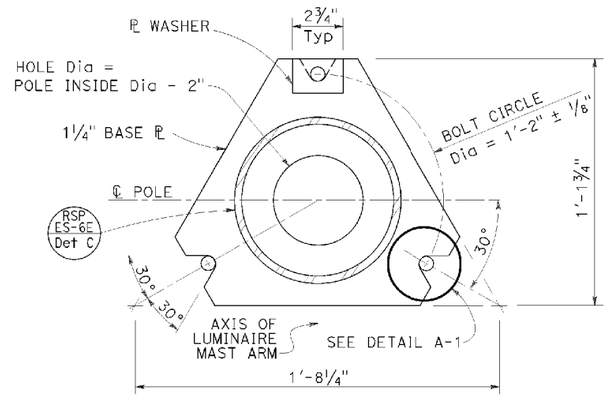


BASE PLATE
DETAIL A

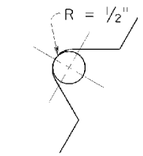


DETAIL A-1

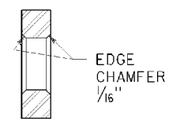


SECTION A-A

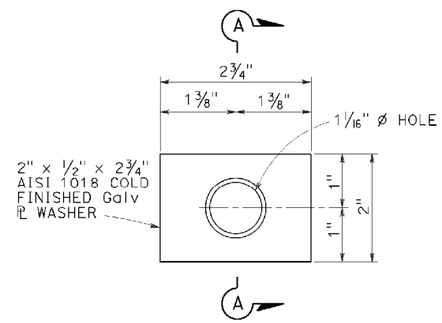


PLATE WASHER
DETAIL D

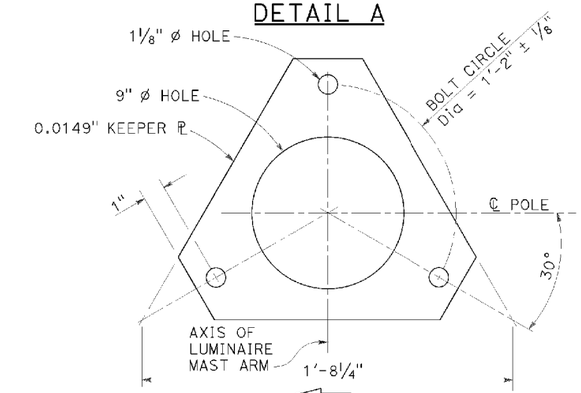


KEEPER PLATE
DETAIL B

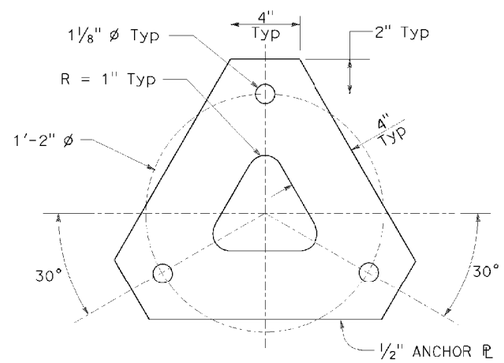


ANCHOR PLATE
DETAIL E

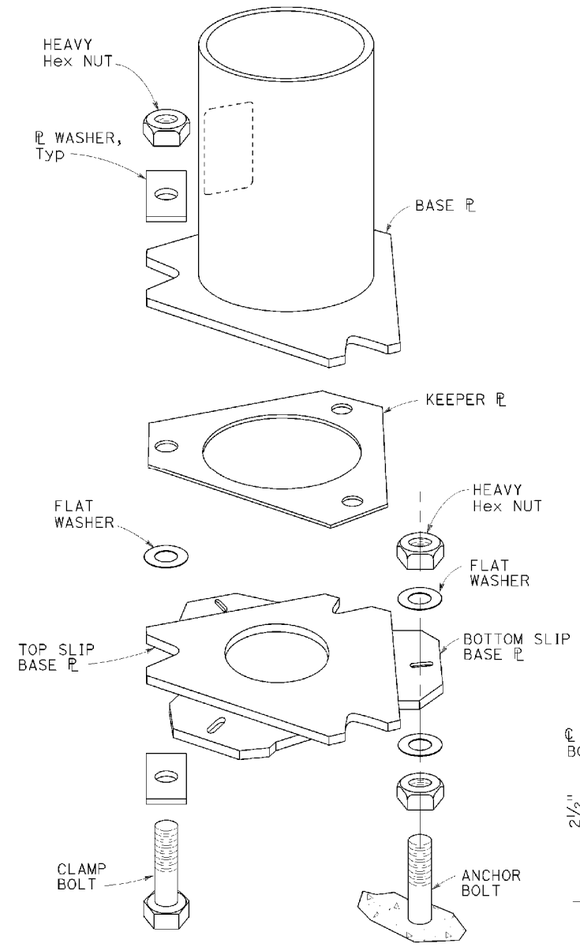


SLIP BASE DETAIL
DETAIL F

NOTES: TO ACCOMPANY PLANS DATED May 23, 2016

1. 1" ø HS anchor bolts. For clamp bolts, see specifications.
2. Conduit shall not protrude more than 2" above top of foundation.
3. Handhole shall be located on the downstream side of traffic.
4. For Type 30 fixed base and for Type 31 fixed base, see Notes 3 and 4 on Revised Standard Plan RSP ES-6E.

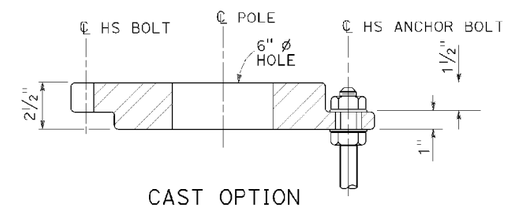


CAST OPTION

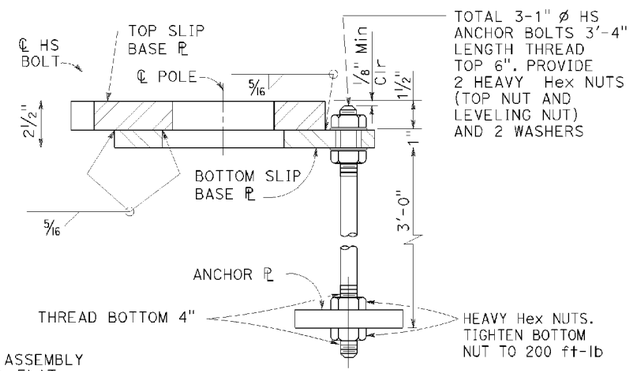


WELDED OPTION

SECTION B-B

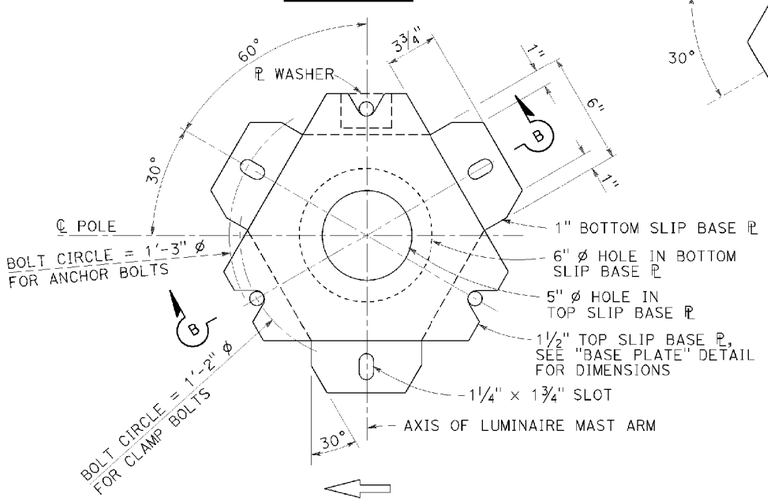


BOTTOM PLATE
DETAIL C

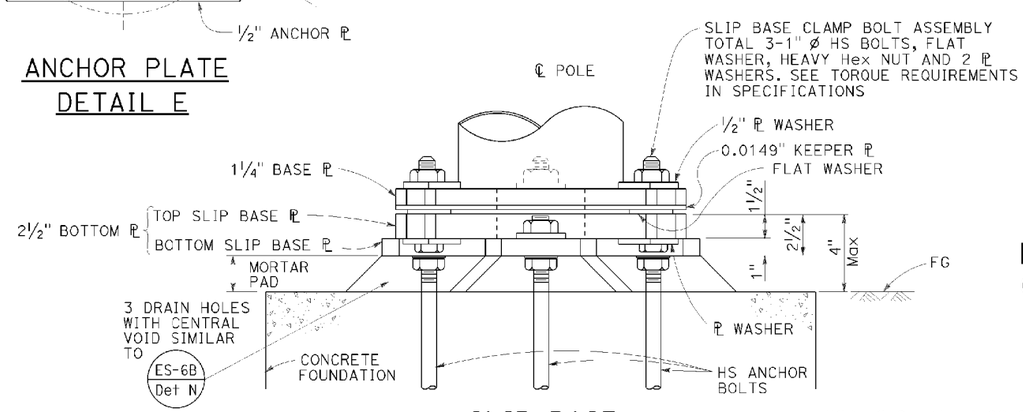


SLIP BASE
ELEVATION A

STATE OF CALIFORNIA
DEPARTMENT OF TRANSPORTATION

# ELECTRICAL SYSTEMS (LIGHTING STANDARD, SLIP BASE PLATE)

NO SCALE

RSP ES-6F DATED OCTOBER 30, 2015 SUPERSEDES STANDARD PLAN ES-6F DATED MAY 20, 2011 - PAGE 457 OF THE STANDARD PLANS BOOK DATED 2010.

**REVISED STANDARD PLAN RSP ES-6F**

2010 REVISED STANDARD PLAN RSP ES-6F

P:\PROJ\01\41500\drafting\sheets\0113000127va045.dgn

8-20-15

| DIST | COUNTY | ROUTE | POST MILES TOTAL PROJECT | SHEET No. | TOTAL SHEETS |
|---|---|---|---|---|---|
| 01 | Hum | 101 | 109.5/R125.8 | 88 | 100 |

REGISTERED CIVIL ENGINEER

July 15, 2016
PLANS APPROVAL DATE

REGISTERED PROFESSIONAL ENGINEER
Stanley P. Johnson
No. C57793
Exp. 3-31-18
CIVIL
STATE OF CALIFORNIA

THE STATE OF CALIFORNIA OR ITS OFFICERS OR AGENTS SHALL NOT BE RESPONSIBLE FOR THE ACCURACY OR COMPLETENESS OF SCANNED COPIES OF THIS PLAN SHEET.

TO ACCOMPANY PLANS DATED May 23, 2016

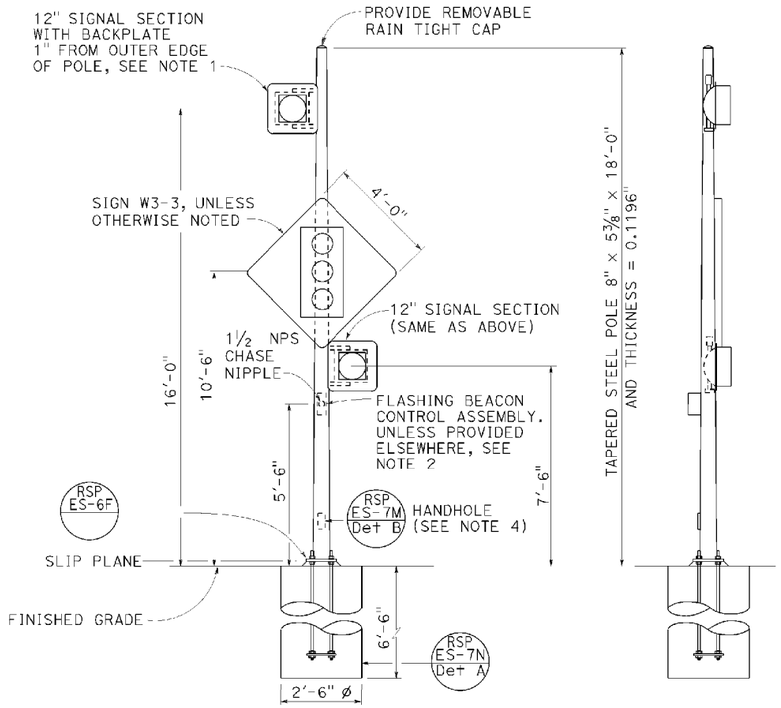


FRONT VIEW

SIDE VIEW

## TYPE 15-FBS
## FLASHING BEACON WITH SLIP BASE INSTALLATION
### DETAIL A

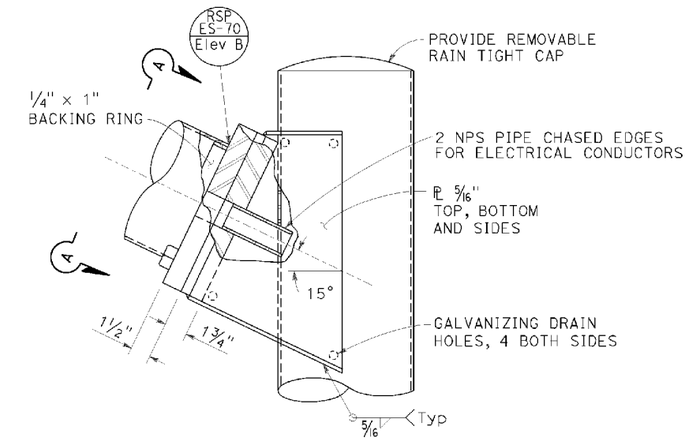


ELEVATION B

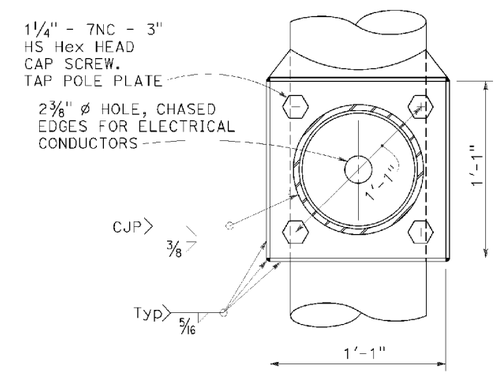


VIEW A-A

## FLASHING BEACON MAST ARM CONNECTION DETAIL
### DETAIL B

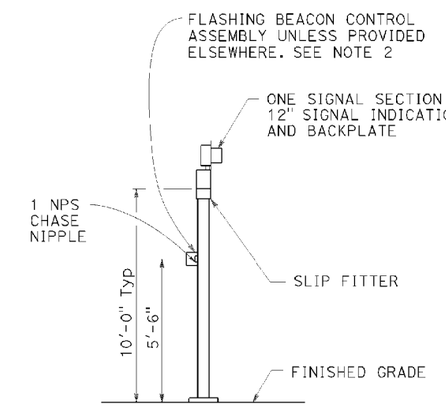


## TYPE 1-A, 1-B, 1-C, AND 1-D
## FLASHING BEACON INSTALLATION
### DETAIL D
See Note 5

NOTES:

1. See Revised Standard Plans RSP ES-4A and RSP ES-4D for attachment fitting details.
2. For wiring diagram, see Revised Standard Plan RSP ES-14B.
3. For additional notes and details, see Revised Standard Plans RSP ES-7M and RSP ES-7N.
4. Handhole shall be located on the downstream side of traffic.
5. See project plans for type of standard to be installed.

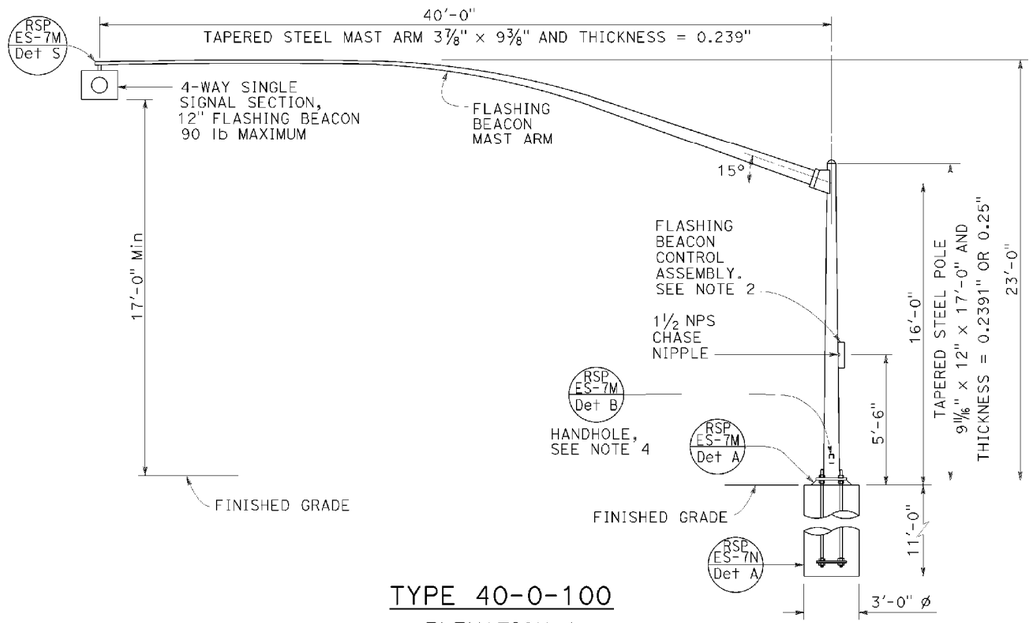


## TYPE 40-0-100
### ELEVATION A

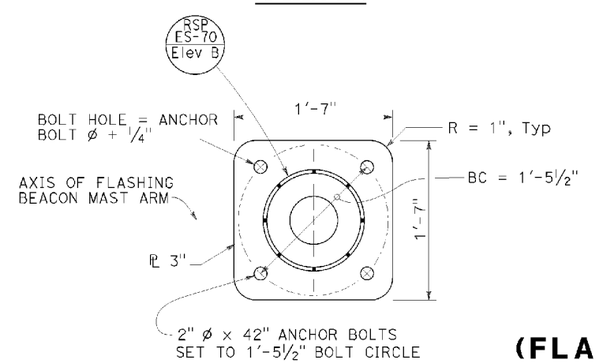


## BASE PLATE
### DETAIL C

STATE OF CALIFORNIA
DEPARTMENT OF TRANSPORTATION

# ELECTRICAL SYSTEMS (FLASHING BEACON ON A TYPE 1, TYPE 15-FBS, AND TYPE 40 STANDARD)

NO SCALE

RSP ES-7J DATED JULY 15, 2016 SUPERSEDES RSP ES-7J DATED APRIL 15, 2016 AND RSP ES-7J DATED OCTOBER 30, 2015 AND RSP ES-7J DATED JULY 19, 2013 AND STANDARD PLAN ES-7J DATED MAY 20, 2011 - PAGE 471 OF THE STANDARD PLANS BOOK DATED 2010.

**REVISED STANDARD PLAN RSP ES-7J**

**2010 REVISED STANDARD PLAN RSP ES-7J**

P:\PROJ\01\41500\drafting\sheets\0113000127va046.dgn

6-20-16

| DIST | COUNTY | ROUTE | POST MILES TOTAL PROJECT | SHEET No. | TOTAL SHEETS |
|---|---|---|---|---|---|
| 01 | Hum | 101 | 109.5/R125.8 | 89 | 100 |

REGISTERED CIVIL ENGINEER

July 15, 2016
PLANS APPROVAL DATE

REGISTERED PROFESSIONAL ENGINEER Stanley P. Johnson No. C57793 Exp. 3-31-18 CIVIL STATE OF CALIFORNIA

THE STATE OF CALIFORNIA OR ITS OFFICERS OR AGENTS SHALL NOT BE RESPONSIBLE FOR THE ACCURACY OR COMPLETENESS OF SCANNED COPIES OF THIS PLAN SHEET.

TO ACCOMPANY PLANS DATED May 23, 2016

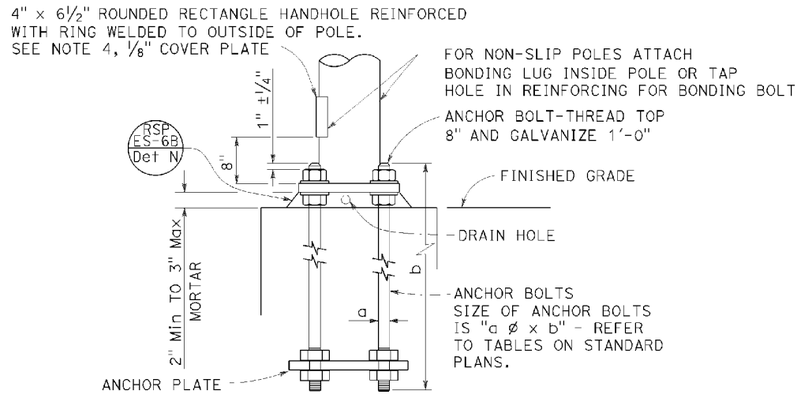


## HANDHOLE AND ANCHORAGE
DETAIL A

### IDENTIFICATION NUMBER

1. Attach a stamped metal tag with pole's identification number above the handhole. ¼" high number, minimum.
2. Attach a stamped metal tag with mast arm's identification number to the bottom of the signal mast arm near the pole plate. ¼" high number, minimum.

Type — Load case (Use SL for special load case) — Design wind velocity (mph) — Signal mast arm length (ft) {Near handhole: Maximum signal mast arm length for pole type; Near pole plate: Installed signal mast arm length} — Standard plan year — Only for poles or mast arms using Detail F — Only for poles or mast arms using RSP ES-70

26A - 3 - 100 - 45 - 10 - F or FB

## SAMPLE IDENTIFICATION NUMBER

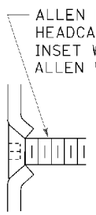


## TYPICAL DETAIL
DETAIL B-1

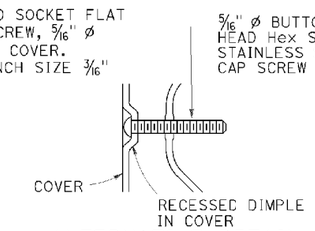


## ALTERNATIVE DETAIL
DETAIL B-2

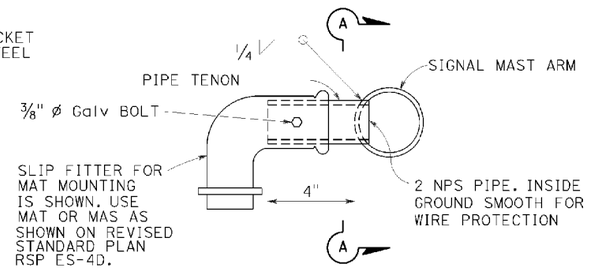


## SIDE TENON
DETAIL S-1

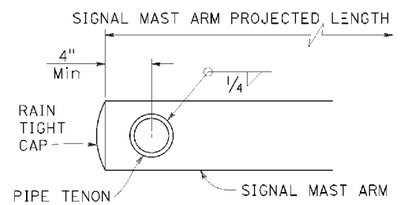


## SECTION A-A

## PIPE TENONS
DETAIL S

### NOTES:

1. Provide a Hex nut, leveling nut and 2 washers for each bolt.
2. Luminaire mast arms shall be round, tapered steel tubes, taper of 0.1375" to 0.143-inch per foot with an end section 2⅜" OD for mounting hardware. Extensions of 2 NPS Standard pipe and 7" long may be used at the option of the manufacturer. When low pressure sodium luminaires are required, the extension shall be 1'-3".
3. Signal mast arms shall be round, tapered steel tubes, maximum taper 0.143-inch per foot.
4. Handhole reinforcement ring shall be ¼" x 2" for 0.1196" to 0.2391" thick poles, ⅜" x 2" for 0.3125" to 0.375" thick poles.
5. Handholes shall be located on the downstream side of traffic.
6. Detail F, fatigue resistant weld, is required at socket welded signal mast arm plate and pole base plate.
7. Cap screws shall be tightened by the turn-of-nut method ⅓ turn from a snug tight condition. No washer will be required.
8. Outside diameter, wall thickness, and corresponding section properties of poles and mast arms as shown in the Standard Plans are minimums. Unless otherwise specified, alternative sections shall require approval by the Engineer.
9. Design: AASHTO Standard Specifications for Structural Support for Highway Signs, Luminaires, and Traffic Signals, 6th Edition. Basic Wind Speed = 100 mph (3 seconds gust). Yearly Mean Wind Velocity = 15.6 mph.
10. Materials (Structural steel):
    fy = 55,000 psi (tapered steel tube and anchor bolts)
    fy = 50,000 psi (unless otherwise noted)
11. Materials (Reinforced concrete):
    f'c = 3,625 psi
    fy = 60,000 psi

| WELD SIZE | WALL THICKNESS |
|---|---|
| 3/16" | 0.1196" |
| ¼" | 0.1793" |
| 5/16" | 0.2391" |
| ⅜" | 0.3125" |
| 7/16" | 0.375" |

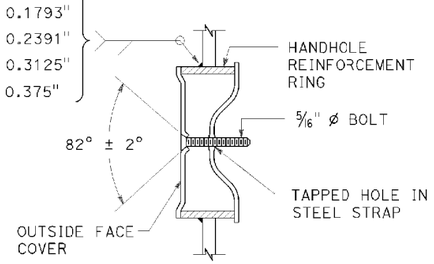


## TAMPER RESISTANT HANDHOLE COVER
DETAIL B

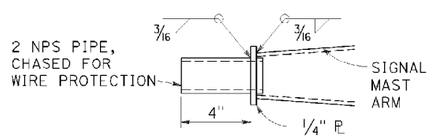


## TIP TENON
DETAIL TL

This detail supersedes Detail S when so designated

| WELD SIZE | WALL THICKNESS |
|---|---|
| ⅛" | 0.1196" |
| 3/16" | 0.1793" |
| ¼" | 0.2391" |

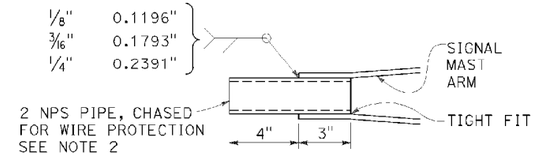


## TIP TENON
DETAIL TS

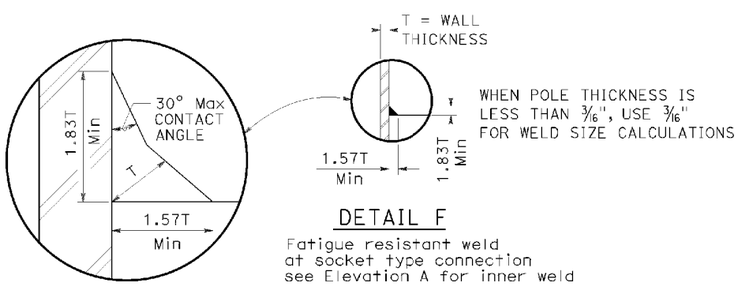


## DETAIL F
Fatigue resistant weld at socket type connection see Elevation A for inner weld

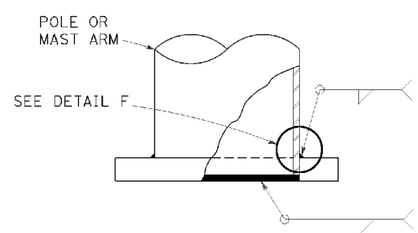


| WELD SIZE | WALL THICKNESS |
|---|---|
| ¼" | 0.1196" |
| 5/16" | 0.1793" |
| ⅜" | 0.2391" |
| 7/16" | 0.3125" |

| | |
|---|---|
| ⅛" | 0.1196" |
| 3/16" | 0.1793" |
| ¼" | 0.2391" |
| 5/16" | 0.3125" |

## ELEVATION A

STATE OF CALIFORNIA
DEPARTMENT OF TRANSPORTATION

# ELECTRICAL SYSTEMS (SIGNAL AND LIGHTING STANDARD, DETAIL No. 1)

NO SCALE

RSP ES-7M DATED JULY 15, 2016 SUPERSEDES RSP ES-7M DATED OCTOBER 30, 2015 AND STANDARD PLAN ES-7M DATED MAY 20, 2011 - PAGE 474 OF THE STANDARD PLANS BOOK DATED 2010.

**REVISED STANDARD PLAN RSP ES-7M**

2010 REVISED STANDARD PLAN RSP ES-7M

P:\PROJ\01\41500\drafting\sheets\0113000127va047.dgn

6-20-16

| DIST | COUNTY | ROUTE | POST MILES TOTAL PROJECT | SHEET No. | TOTAL SHEETS |
|---|---|---|---|---|---|
| 01 | Hum | 101 | 109.5/R125.8 | 90 | 100 |

REGISTERED CIVIL ENGINEER

July 15, 2016
PLANS APPROVAL DATE

REGISTERED PROFESSIONAL ENGINEER
Stanley P. Johnson
No. C57793
Exp. 3-31-18
CIVIL
STATE OF CALIFORNIA

THE STATE OF CALIFORNIA OR ITS OFFICERS OR AGENTS SHALL NOT BE RESPONSIBLE FOR THE ACCURACY OR COMPLETENESS OF SCANNED COPIES OF THIS PLAN SHEET.

TO ACCOMPANY PLANS DATED May 23, 2016

**2010 REVISED STANDARD PLAN RSP ES-7N**

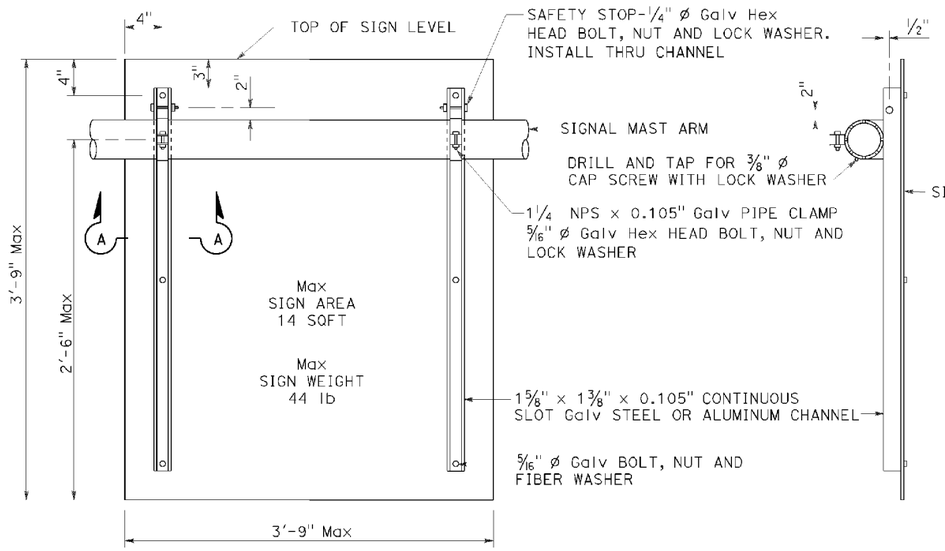


REAR VIEW

SIDE VIEW

## SIGN MOUNTING DETAILS
DETAIL U

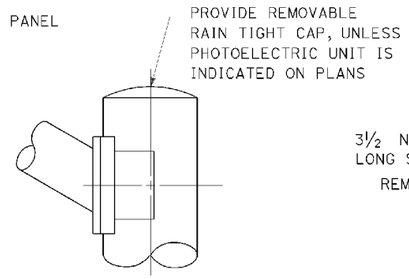


STANDARD TOP
DETAIL B-1

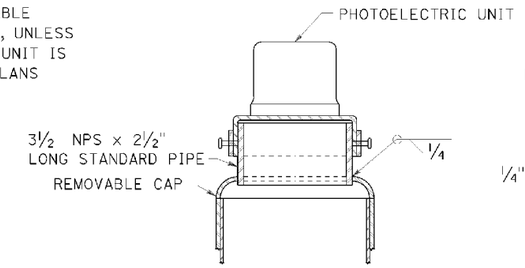


MOUNTING ADAPTER FOR
PHOTOELECTRIC UNIT
DETAIL B-2

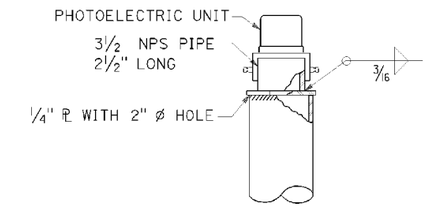


ALTERNATIVE
MOUNTING ADAPTER
DETAIL B-3

## POLE TOP DETAILS
DETAIL B

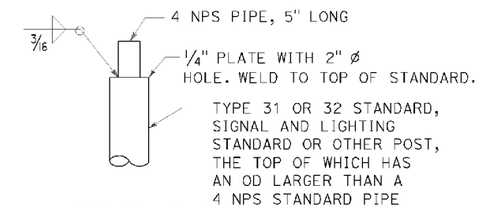


DETAIL C-1

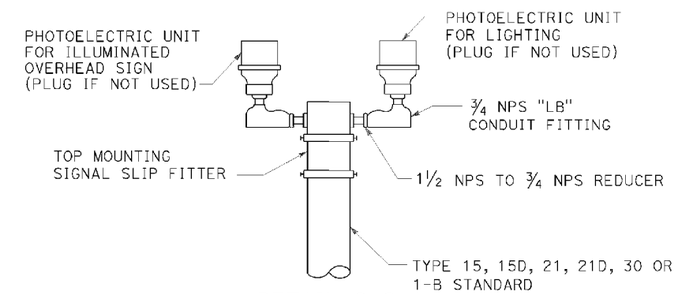


DETAIL C-2

## DUAL PHOTOELECTRIC UNIT MOUNTING DETAIL
DETAIL C

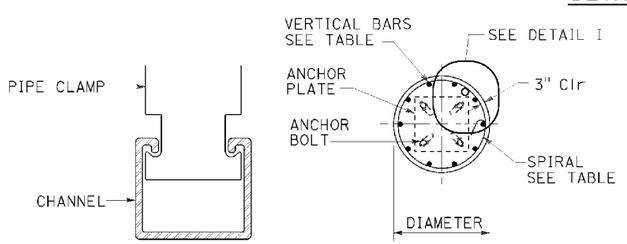


SECTION A-A

SECTION B-B

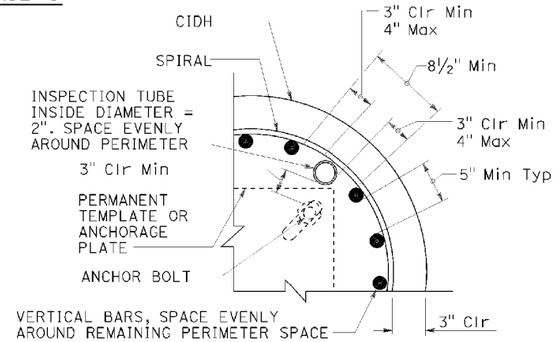


INSPECTION TUBE PLACEMENT
DETAIL I

| CIDH REINFORCING AND INSPECTION TUBE SCHEDULE | | | |
|---|---|---|---|
| CIDH DIAMETER | VERTICAL BARS | SPIRAL | INSPECTION TUBE |
| 2 ft | 8-#5 | #4 AT 6 | 2 |
| 2.5 ft | 10-#6 | | 4* |
| 3 ft | 12-#7 | | |
| 3.5 ft | 14-#8 | #5 AT 6 | 4 |
| 4 ft | 18-#9 | 2-#4 AT 7 | 5 |
| 4.5 ft | 18-#9 | 2-#5 AT 7 | 5 |
| 5 ft | 22-#10 | 2-#5 AT 7 | 6 |
| 6 ft | 26-#11 | 2-#6 AT 7 | 7 |

* FOR SLIP BASE VERSIONS WITH 3 ANCHOR BOLTS USE 3 INSPECTION TUBES.

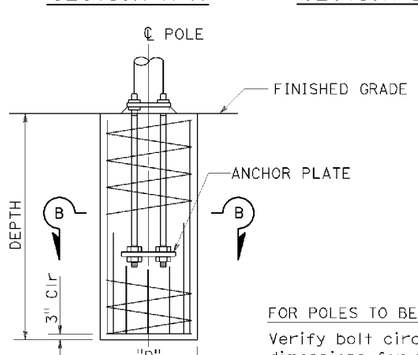


ELEVATION

FOR POLES TO BE INSTALLED ON EXISTING FOUNDATION:
Verify bolt circles, anchor bolt sizes and dependent dimensions for poles to be installed on existing foundations before fabricating the poles.

## CAST-IN-DRILLED-HOLE PILE FOUNDATION, REINFORCED PILE
DETAIL A

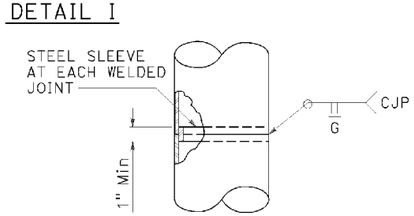


FOR UNIFORM TUBE THICKNESS
DETAIL T-1

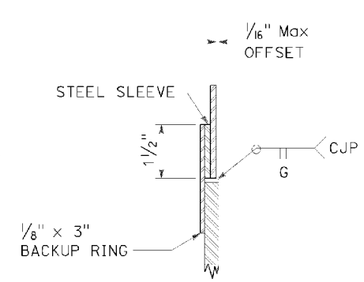


AT TUBE THICKNESS CHANGE
DETAIL T-2

## POLE SPLICES
DETAIL T

STATE OF CALIFORNIA
DEPARTMENT OF TRANSPORTATION

# ELECTRICAL SYSTEMS (SIGNAL AND LIGHTING STANDARD, DETAIL No. 2)

NO SCALE

RSP ES-7N DATED JULY 15, 2016 SUPERSEDES RSP ES-7N DATED OCTOBER 30, 2015 AND STANDARD PLAN ES-7N DATED MAY 20, 2011 - PAGE 475 OF THE STANDARD PLANS BOOK DATED 2010.

**REVISED STANDARD PLAN RSP ES-7N**

P:\PROJ\01\41500\drafting\sheets\0113000127va048.dgn

6-20-16

| DIST | COUNTY | ROUTE | POST MILES TOTAL PROJECT | SHEET NO. | TOTAL SHEETS |
|---|---|---|---|---|---|
| 01 | Hum | 101 | 109.5/R125.8 | 91 | 100 |

Theresa Gabriel
REGISTERED ELECTRICAL ENGINEER

April 15, 2016
PLANS APPROVAL DATE

REGISTERED PROFESSIONAL ENGINEER Theresa Aziz Gabriel No. E15129 Exp. 6-30-16 ELECTRICAL STATE OF CALIFORNIA

THE STATE OF CALIFORNIA OR ITS OFFICERS OR AGENTS SHALL NOT BE RESPONSIBLE FOR THE ACCURACY OR COMPLETENESS OF SCANNED COPIES OF THIS PLAN SHEET.

TO ACCOMPANY PLANS DATED May 23, 2016

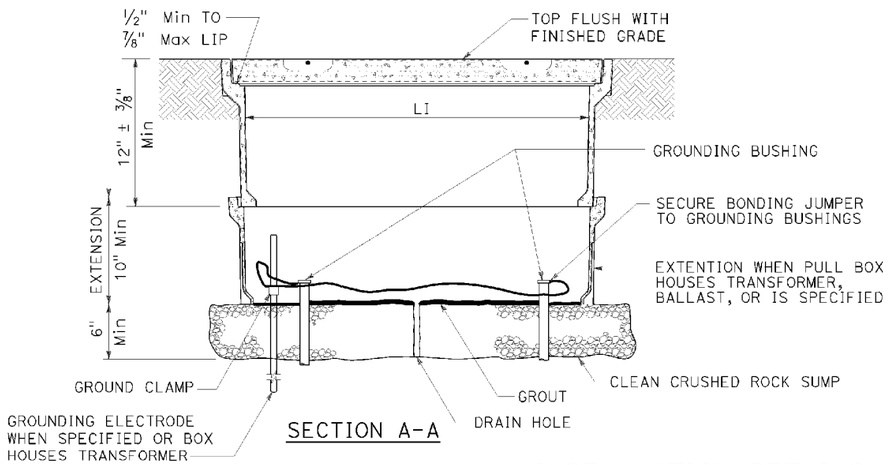


SECTION A-A

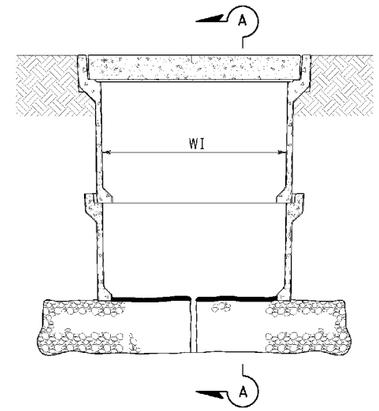


SIDE VIEW

## INSTALLATION DETAILS

### DETAIL A

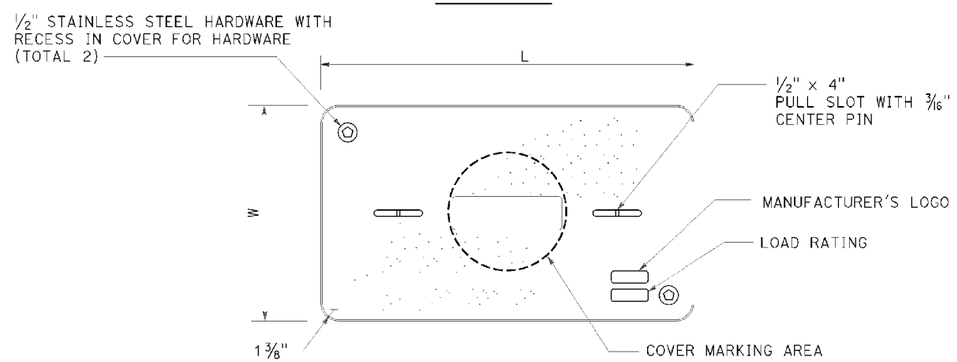


COVER TOP VIEW

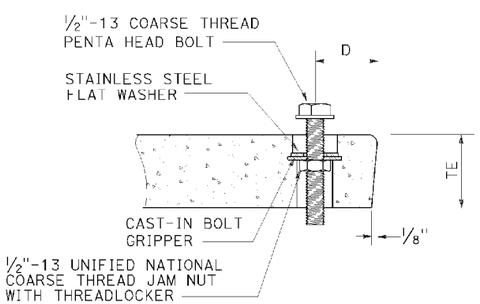


TYPICAL COVER CAPTIVE BOLT

OR SIMILAR

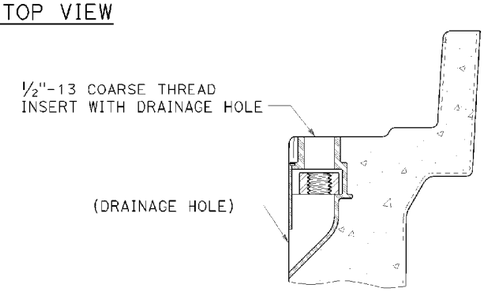


TYPICAL THREADED INSERT

OR SIMILAR

## NOTES:

1. The nominal dimensions of the opening in which the cover sets shall be the same as the cover dimensions except the length and width dimensions shall be 1/8" greater.
2. Covers and boxes shall be interchangeable with California standard male and female gages. When interchanged with a standard male or female gage, the top surfaces shall be flush within 1/8". Top outside radius of covers and pull boxes shall have a 1/8" radius.
3. Dimensions for the cover for non-traffic pull box are nominal values.

DIMENSION TABLE

| PULL BOX | PULL BOX | | | | | COVER | | | | |
|---|---|---|---|---|---|---|---|---|---|---|
| | MINIMUM DEPTH BOX | MINIMUM DEPTH EXTENSION | MINIMUM WEIGHT | LI Min | WI Min | TE | D | L | W | MINIMUM WEIGHT |
| No. 3 1/2 | 12" | N/A | 40 lb | 1' - 3" | 9" | 1 3/4" | 1 3/4" | 1'-3 1/4" - 1'-3 3/8" | 10" - 10 1/8" | 30 lb |
| No. 5 | 12" | 10" | 55 lb | 1' - 8" | 11" | 2" | 1 3/4" | 1'-11 1/4" | 1'-1 3/4" | 60 lb |
| No. 6 | 12" | 10" | 70 lb | 2' - 4 1/4" | 1' - 3 1/4" | 2" | 2" | 2'-6 1/2" | 1'-5 1/2" | 85 lb |

STATE OF CALIFORNIA
DEPARTMENT OF TRANSPORTATION

# ELECTRICAL SYSTEMS (NON-TRAFFIC PULL BOX)

NO SCALE

RSP ES-8A DATED APRIL 15, 2016 SUPERSEDES RSP ES-8A DATED OCTOBER 30, 2015 AND RSP ES-8A DATED JULY 19, 2013 AND RSP ES-8A DATED JANUARY 20, 2012 THAT SUPPLEMENTS THE STANDARD PLANS BOOK DATED 2010.

**REVISED STANDARD PLAN RSP ES-8A**

**2010 REVISED STANDARD PLAN RSP ES-8A**

P:\PROJ\01\41500\drafting\sheets\0113000127va049.dgn

1-22-16

| DIST | COUNTY | ROUTE | POST MILES TOTAL PROJECT | SHEET No. | TOTAL SHEETS |
|---|---|---|---|---|---|
| 01 | Hum | 101 | 109.5/R125.8 | 92 | 100 |

REGISTERED CIVIL ENGINEER

July 15, 2016
PLANS APPROVAL DATE

REGISTERED PROFESSIONAL ENGINEER
Stanley P. Johnson
No. C57793
Exp. 3-31-18
CIVIL
STATE OF CALIFORNIA

THE STATE OF CALIFORNIA OR ITS OFFICERS OR AGENTS SHALL NOT BE RESPONSIBLE FOR THE ACCURACY OR COMPLETENESS OF SCANNED COPIES OF THIS PLAN SHEET.

TO ACCOMPANY PLANS DATED May 23, 2016

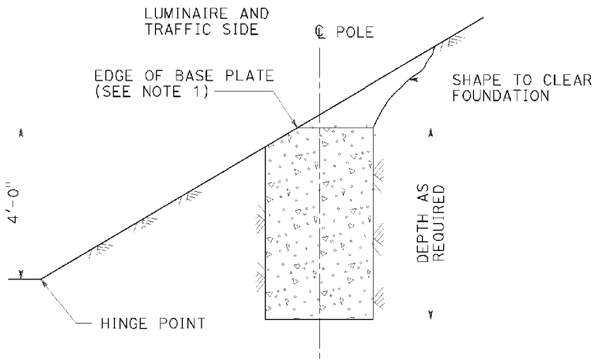


CUT SLOPES
STEEPER THAN 4:1,
LESS THAN 2:1
DETAIL A-1
See Note 2 and 3

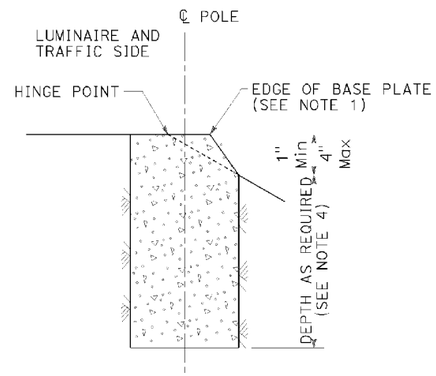


FILL SLOPES
STEEPER THAN 4:1,
LESS THAN 2:1
DETAIL A-2
See Note 2 and 3

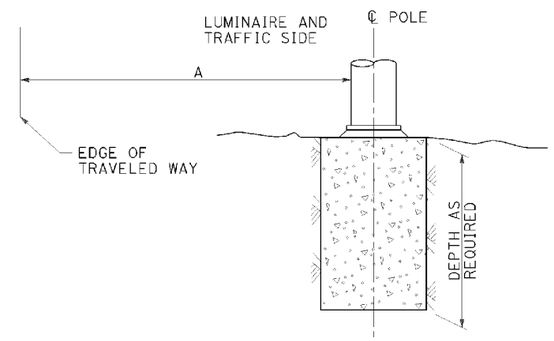


FLAT SECTIONS, CUT OR FILL SLOPES
4:1 OR FLATTER
DETAIL A-3
See Note 2

FOUNDATIONS ADJACENT TO ALL ROADWAYS EXCEPT
IN SIDEWALK, MEDIAN AND ISLAND AREAS
DETAIL A

| STANDARD TYPE | SETBACK (DIMENSION A) |
|---|---|
| 32 | 30'-0" (Min) |
| 31 | 20'-0" (Min) |
| 15, 15D, 15-SB, 21, 21D, 30 | ARM LENGTH (Min) |

NOTES:

1. Where a portion of the foundation is above grade, the top edges shall have a 1" chamfer.
2. Slopes shall be horizontal to vertical ratio (Horizontal : Vertical).
3. Horizontal setbacks on cut and fill slopes steeper than 4:1 shall not exceed the distance shown for flat sections.
4. CIDH embedment depth shall be increased beyond standard depths by the diameter of the CIDH.

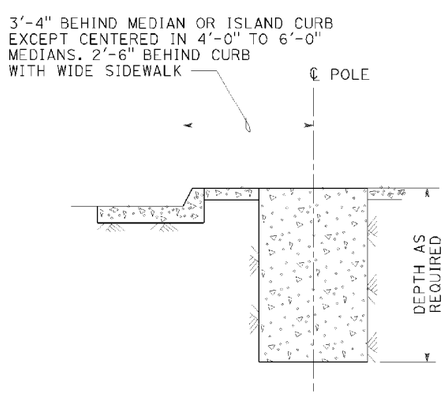


MEDIAN, ISLAND
OR WIDE SIDEWALK
DETAIL B-1
7' Wide and wider

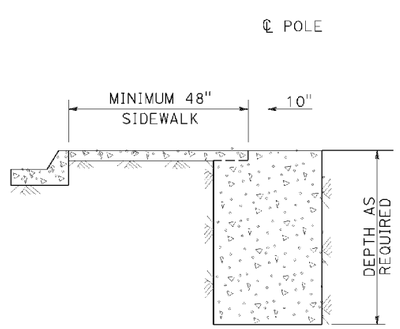


NARROW SIDEWALK
DETAIL B-2
Less than 7' wide

FOUNDATIONS IN SIDEWALK, MEDIAN AND ISLAND AREAS
DETAIL B

STATE OF CALIFORNIA
DEPARTMENT OF TRANSPORTATION

# ELECTRICAL SYSTEMS (FOUNDATION INSTALLATIONS)

NO SCALE

RSP ES-11 DATED JULY 15, 2016 SUPERSEDES RSP ES-11 DATED JULY 19, 2013 AND STANDARD PLAN ES-11 DATED MAY 20, 2011 - PAGE 488 OF THE STANDARD PLANS BOOK DATED 2010.

**REVISED STANDARD PLAN RSP ES-11**

**2010 REVISED STANDARD PLAN RSP ES-11**

P:\PROJ\01\41500\drafting\sheets\0113000127va050.dgn

6-20-16

| DIST | COUNTY | ROUTE | POST MILES TOTAL PROJECT | SHEET NO. | TOTAL SHEETS |
|---|---|---|---|---|---|
| 01 | Hum | 101 | 109.5/R125.8 | 93 | 100 |

Theresa Gabriel
REGISTERED ELECTRICAL ENGINEER

April 15, 2016
PLANS APPROVAL DATE

REGISTERED PROFESSIONAL ENGINEER
Theresa Aziz Gabriel
No. E15129
Exp. 6-30-16
ELECTRICAL
STATE OF CALIFORNIA

THE STATE OF CALIFORNIA OR ITS OFFICERS OR AGENTS SHALL NOT BE RESPONSIBLE FOR THE ACCURACY OR COMPLETENESS OF SCANNED COPIES OF THIS PLAN SHEET.

TO ACCOMPANY PLANS DATED May 23, 2016

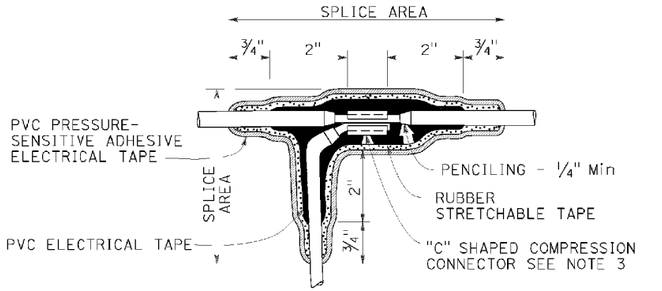


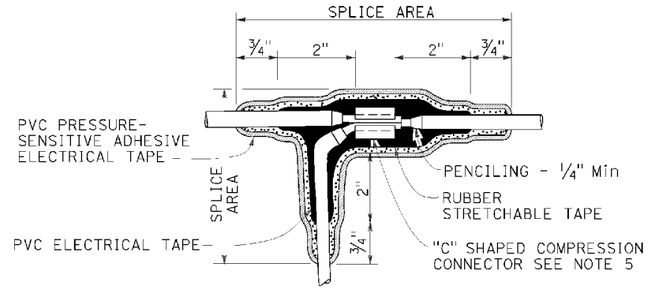


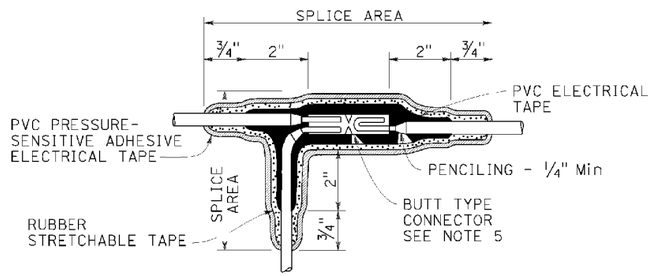


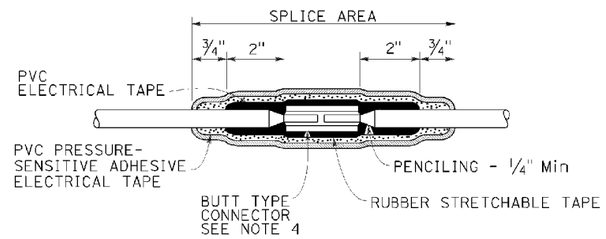


## TYPICAL SPLICE INSULATION METHOD B

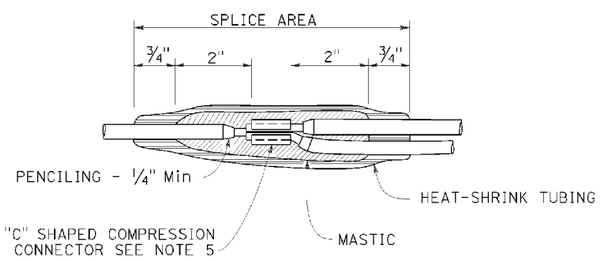


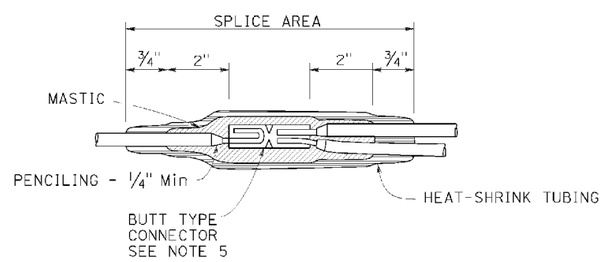


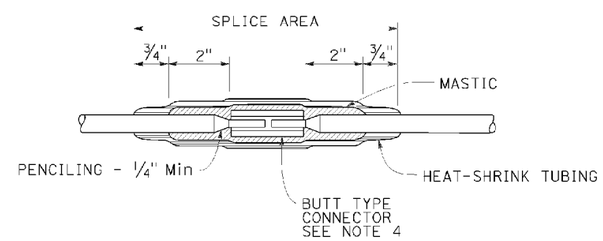


## TYPICAL SPLICE INSULATION HEAT-SHRINK TUBING

NOTES:

1. Dimensions are minimum.
2. Rubber tapes shall be rolled after application.
3. Between 1 free-end and 1 through conductor.
4. Between 2 free-end conductors.
5. Between 3 free-end conductors.

STATE OF CALIFORNIA
DEPARTMENT OF TRANSPORTATION

# ELECTRICAL SYSTEMS (SPLICE INSULATION METHODS DETAILS)

NO SCALE

RSP ES-13A DATED APRIL 15, 2016 SUPERSEDES RSP ES-13A DATED OCTOBER 30, 2015 AND STANDARD PLAN ES-13A DATED MAY 20, 2011 - PAGE 491 OF THE STANDARD PLANS BOOK DATED 2010.

**REVISED STANDARD PLAN RSP ES-13A**

**2010 REVISED STANDARD PLAN RSP ES-13A**

P:\PROJ\01\41500\drafting\sheets\0113000127va051.dgn

1-22-16

| DIST | COUNTY | ROUTE | POST MILES TOTAL PROJECT | SHEET No. | TOTAL SHEETS |
|---|---|---|---|---|---|
| 01 | Hum | 101 | 109.5/R125.8 | 94 | 100 |

REGISTERED CIVIL ENGINEER

October 30, 2015
PLANS APPROVAL DATE

REGISTERED PROFESSIONAL ENGINEER
Srikanth N. Balasubramanian
No. C56426
Exp. 6-30-17
CIVIL
STATE OF CALIFORNIA

THE STATE OF CALIFORNIA OR ITS OFFICIALS OR AGENTS SHALL NOT BE RESPONSIBLE FOR THE ACCURACY OR COMPLETENESS OF SCANNED COPIES OF THIS PLAN SHEET.

TO ACCOMPANY PLANS DATED May 23, 2016

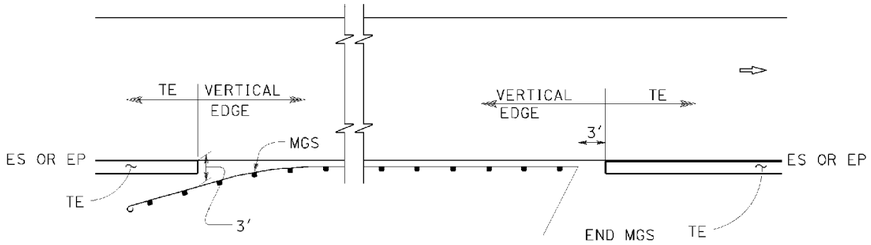


MGS

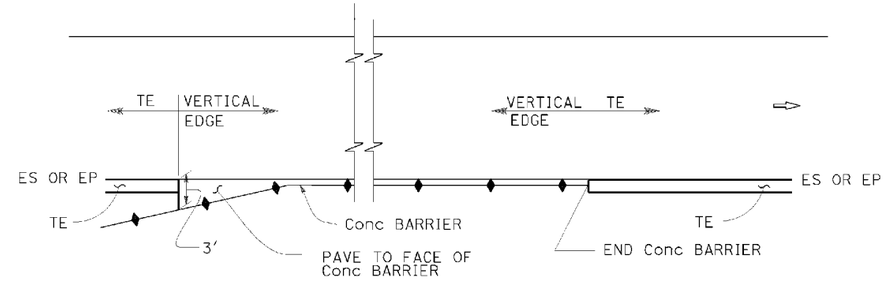


CONCRETE BARRIER

## ABBREVIATIONS:

TE TAPERED EDGE

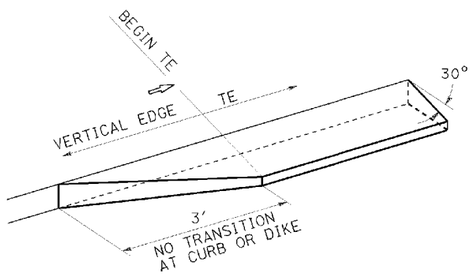


TRANSITION DETAIL
FOR CONCRETE ONLY

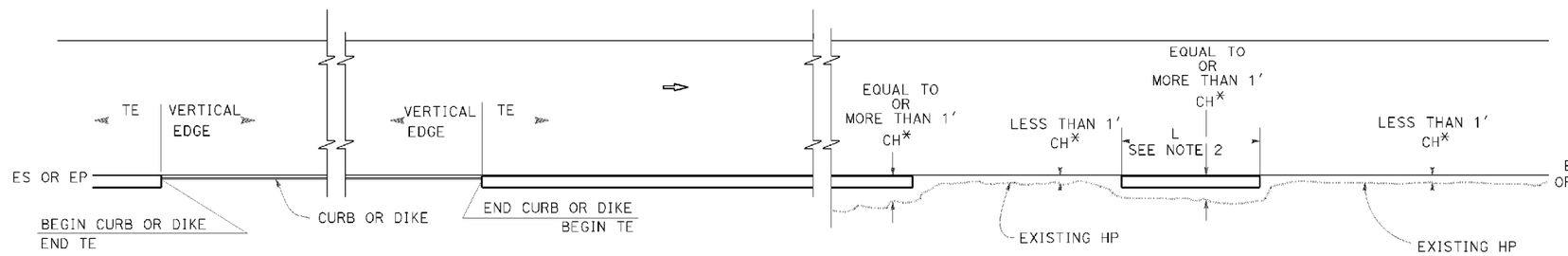


CURB OR DIKE




NARROW SIDE SLOPE

* CH = Distance from ES or EP to existing HP.

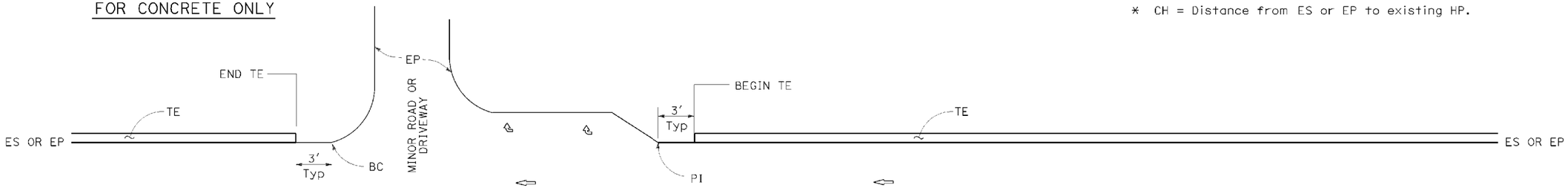


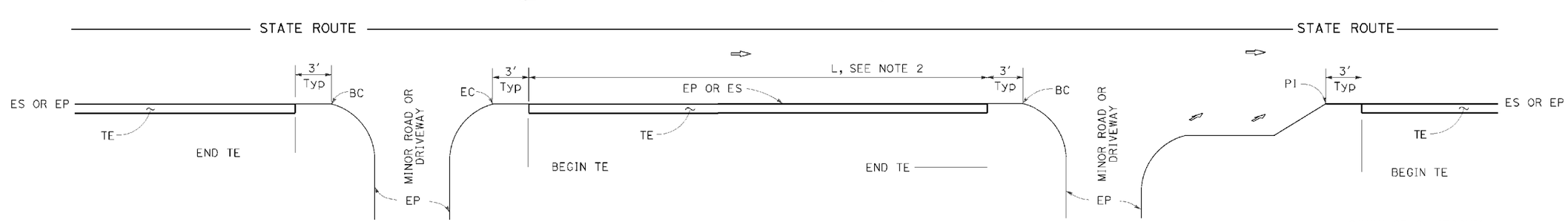


INTERTECTION

MINOR ROADWAY OR DRIVEWAY

DRIVEWAY AND INTERSECTION

STATE OF CALIFORNIA
DEPARTMENT OF TRANSPORTATION

# PAVEMENT EDGE TREATMENTS

NO SCALE

## NOTES:

1. For details not shown, see Revised Standard Plans RSP P75 and RSP P76.
2. Tapered edge is optional when L is less than 30'.

RSP P74 DATED OCTOBER 30, 2015 SUPERSEDES RSP P74 DATED NOVEMBER 15, 2013 AND RSP P74 DATED JANUARY 20, 2012 THAT SUPPLEMENTS THE STANDARD PLANS BOOK DATED 2010.

**REVISED STANDARD PLAN RSP P74**

**2010 REVISED STANDARD PLAN RSP P74**

P:\PROJ\01\41500\drafting\sheets\0113000127va052.dgn

| DIST | COUNTY | ROUTE | POST MILES TOTAL PROJECT | SHEET No. | TOTAL SHEETS |
|---|---|---|---|---|---|
| 01 | Hum | 101 | 109.5/R125.8 | 95 | 100 |

REGISTERED CIVIL ENGINEER

October 30, 2015
PLANS APPROVAL DATE

REGISTERED PROFESSIONAL ENGINEER
Srikanth N. Balasubramanian
No. C56426
Exp. 6-30-17
CIVIL
STATE OF CALIFORNIA

THE STATE OF CALIFORNIA OR ITS OFFICIALS OR AGENTS SHALL NOT BE RESPONSIBLE FOR THE ACCURACY OR COMPLETENESS OF SCANNED COPIES OF THIS PLAN SHEET.

TO ACCOMPANY PLANS DATED May 23, 2016

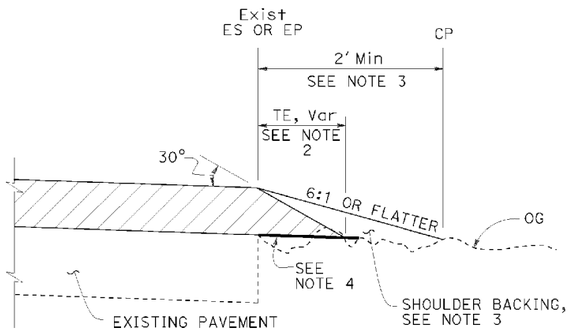


CASE A
Tapered Edge

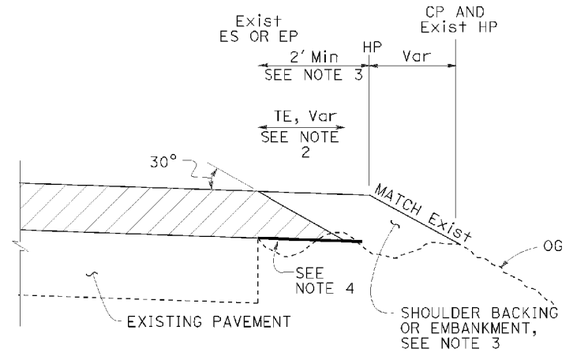


CASE B
Tapered Edge

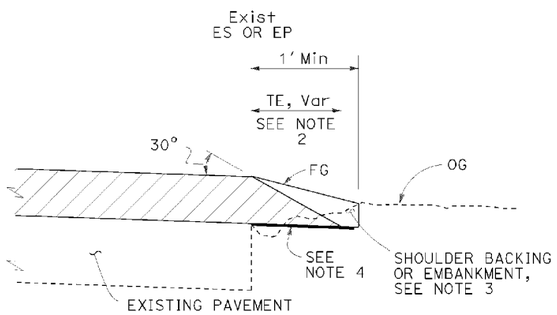


CASE C
Tapered Edge

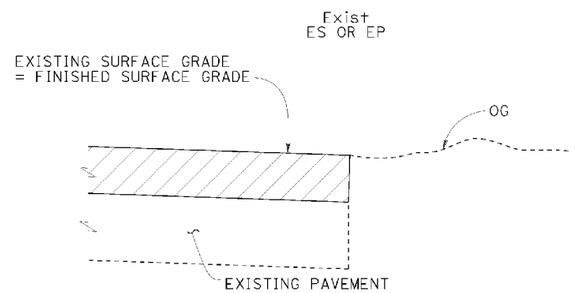


CASE D
Vertical Edge

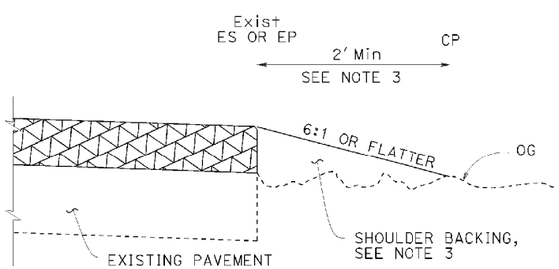


CASE E
Vertical Edge

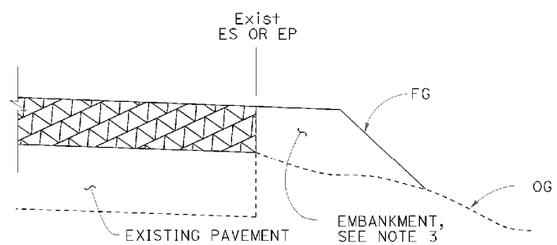


CASE F
Vertical Edge
* See Table A and Revised Std Plan RSP P74

## LEGEND:

- HMA OVERLAY
- HMA OR CONCRETE OVERLAY
- CONCRETE OVERLAY

## ABBREVIATIONS:

TE TAPERED EDGE
TT TOTAL THICKNESS OF TE

## TABLE A
## EDGE TREATMENT FOR VARIOUS OVERLAY THICKNESS AND CONDITIONS

| | OVERLAY THICKNESS | |
|---|---|---|
| FIELD CONDITION | LESS THAN 0.15' | 0.15' OR MORE |
| Exist SLOPE 6:1 OR FLATTER | CASE E | CASE A |
| Exist SLOPE 3:1 TO 6:1 | CASE E | CASE B |
| Exist SLOPE STEEPER THAN 3:1 | CASE F | CASE F |
| CUT SECTION (REPLACE, COLD PLANE, MILL PAVEMENT) | CASE D | CASE C |

## ADDITIONAL HMA OR CONCRETE QUANTITIES FOR TE/SIDE/MILE

| TYPICAL CROSS SECTION | TT | TOTAL ADDITIONAL MATERIAL FOR TE/SIDE/MILE | | |
|---|---|---|---|---|
| | | HMA (TON) | CONCRETE (CY)* | CONCRETE (CY)** |
| TT | 0.15' | 7.7 | NA | NA |
| | 0.20' | 13.7 | NA | NA |
| | 0.30' | 30.9 | NA | NA |
| | 0.40' | 54.9 | NA | NA |
| | 0.45' | 69.4 | NA | NA |
| TT, 0.43' | 0.50' | 84.2 | NA | NA |
| | 0.60' | 113.9 | NA | NA |
| | 0.70' | 143.6 | 70.9 | 94.2 |
| | 0.80' | 173.3 | 85.6 | 112.2 |
| | 0.90' | 203.0 | 100.3 | 130.2 |
| | 1.00' | 232.7 | 114.9 | 148.2 |
| | 1.10' | 262.4 | 129.6 | 166.2 |
| | 1.20' | 292.1 | 144.3 | 184.2 |

* For Detail "A"
** For Optional Detail "A"

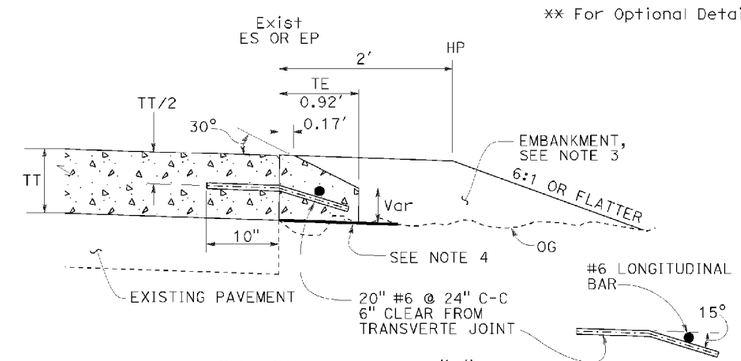


OPTIONAL DETAIL "A"
For concrete overlay
See Note 5

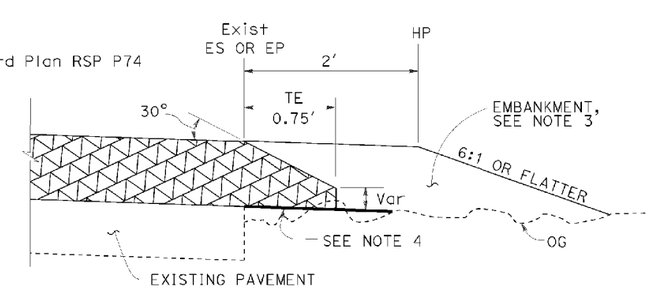


DETAIL "A"
For HMA overlay thickness more than 0.43' or concrete overlay

## NOTES:

1. For limits of tapered edge and vertical edge treatments, see Revised Standard Plan RSP P74.
2. Details shown for HMA overlay thickness less than 0.43'. See Detail "A" for HMA overlay thickness more than 0.43' or concrete overlay.
3. For locations and limits of shoulder backing or embankment see project plans.
4. Grade existing ground to place tapered edge. 1' minimum width
5. Tapered edge transverse joint must match overlay transverse joint. End of #6 longitudinal bar must be 2" ±½" clear from transverse joint.
6. Tapered edge is not needed in the area of MGS, barrier, right turn lane and acceleration lane. See Revised Standard Plan RSP P74.

STATE OF CALIFORNIA
DEPARTMENT OF TRANSPORTATION

# PAVEMENT EDGE TREATMENTS-OVERLAYS

NO SCALE

RSP P75 DATED OCTOBER 30, 2015 SUPERSEDES RSP P75 DATED NOVEMBER 15, 2013 AND RSP P75 DATED JANUARY 20, 2012 THAT SUPPLEMENTS THE STANDARD PLANS BOOK DATED 2010.

# REVISED STANDARD PLAN RSP P75

2010 REVISED STANDARD PLAN RSP P75

P:\PROJ\01\41500\drafting\sheets\0113000127va053.dgn

7-2-15

| DIST | COUNTY | ROUTE | POST MILES TOTAL PROJECT | SHEET No. | TOTAL SHEETS |
|---|---|---|---|---|---|
| 01 | Hum | 101 | 109.5/R125.8 | 96 | 100 |

REGISTERED CIVIL ENGINEER

July 19, 2013
PLANS APPROVAL DATE

REGISTERED PROFESSIONAL ENGINEER
Gurinderpal Bhullar
No. C48815
Exp. 9-30-14
CIVIL
STATE OF CALIFORNIA

THE STATE OF CALIFORNIA OR ITS OFFICERS OR AGENTS SHALL NOT BE RESPONSIBLE FOR THE ACCURACY OR COMPLETENESS OF SCANNED COPIES OF THIS PLAN SHEET.

TO ACCOMPANY PLANS DATED May 23, 2016

TABLE 1

TAPER LENGTH CRITERIA AND CHANNELIZING DEVICE SPACING

| SPEED (S) | MINIMUM TAPER LENGTH * FOR WIDTH OF OFFSET 12 FEET (W) | | | | MAXIMUM CHANNELIZING DEVICE SPACING | | |
|---|---|---|---|---|---|---|---|
| | | | | | X | Y | Z ** |
| | TANGENT 2L | MERGING L | SHIFTING L/2 | SHOULDER L/3 | TAPER | TANGENT | CONFLICT |
| mph | ft | ft | ft | ft | ft | ft | ft |
| 20 | 160 | 80 | 40 | 27 | 20 | 40 | 10 |
| 25 | 250 | 125 | 63 | 42 | 25 | 50 | 12 |
| 30 | 360 | 180 | 90 | 60 | 30 | 60 | 15 |
| 35 | 490 | 245 | 123 | 82 | 35 | 70 | 17 |
| 40 | 640 | 320 | 160 | 107 | 40 | 80 | 20 |
| 45 | 1080 | 540 | 270 | 180 | 45 | 90 | 22 |
| 50 | 1200 | 600 | 300 | 200 | 50 | 100 | 25 |
| 55 | 1320 | 660 | 330 | 220 | 55 | 110 | 27 |
| 60 | 1440 | 720 | 360 | 240 | 60 | 120 | 30 |
| 65 | 1560 | 780 | 390 | 260 | 65 | 130 | 32 |
| 70 | 1680 | 840 | 420 | 280 | 70 | 140 | 35 |

* - For other offsets, use the following merging taper length formula for L:
For speed of 40 mph or less, $L = WS^2/60$
For speed of 45 mph or more, $L = WS$

Where: L = Taper length in feet
W = Width of offset in feet
S = Posted speed limit, off-peak 85th-percentile speed prior to work starting, or the anticipated operating speed in mph

** - Use for taper and tangent sections where there are no pavement markings or where there is a conflict between existing pavement markings and channelizers (CA).

TABLE 2

LONGITUDINAL BUFFER SPACE AND FLAGGER STATION SPACING

| SPEED * | Min D ** | DOWNGRADE Min D *** | | |
|---|---|---|---|---|
| | | -3% | -6% | -9% |
| mph | ft | ft | ft | ft |
| 20 | 115 | 116 | 120 | 126 |
| 25 | 155 | 158 | 165 | 173 |
| 30 | 200 | 205 | 215 | 227 |
| 35 | 250 | 257 | 271 | 287 |
| 40 | 305 | 315 | 333 | 354 |
| 45 | 360 | 378 | 400 | 427 |
| 50 | 425 | 446 | 474 | 507 |
| 55 | 495 | 520 | 553 | 593 |
| 60 | 570 | 598 | 638 | 686 |
| 65 | 645 | 682 | 728 | 785 |
| 70 | 730 | 771 | 825 | 891 |

* - Speed is posted speed limit, off-peak 85th-percentile speed prior to work starting, or the anticipated operating speed in mph

** - Longitudinal buffer space or flagger station spacing

*** - Use on sustained downgrade steeper than -3 percent and longer than 1 mile.

TABLE 3

ADVANCE WARNING SIGN SPACING

| ROAD TYPE | DISTANCE BETWEEN SIGNS * | | |
|---|---|---|---|
| | A | B | C |
| | ft | ft | ft |
| URBAN - 25 mph OR LESS | 100 | 100 | 100 |
| URBAN - MORE THAN 25 mph TO 40 mph | 250 | 250 | 250 |
| URBAN - MORE THAN 40 mph | 350 | 350 | 350 |
| RURAL | 500 | 500 | 500 |
| EXPRESSWAY / FREEWAY | 1000 | 1500 | 2640 |

* - The distances are approximate, are intended for guidance purposes only, and should be applied with engineering judgment. These distances should be adjusted by the Engineer for field conditions, if necessary, by increasing or decreasing the recommmended distances.

STATE OF CALIFORNIA
DEPARTMENT OF TRANSPORTATION

# TRAFFIC CONTROL SYSTEM TABLES FOR LANE AND RAMP CLOSURES

NO SCALE

RSP T9 DATED JULY 19, 2013 SUPERSEDES RSP T9 DATED APRIL 19, 2013 THAT SUPPLEMENTS THE STANDARD PLANS BOOK DATED 2010.

**REVISED STANDARD PLAN RSP T9**

**2010 REVISED STANDARD PLAN RSP T9**

P:\PROJ\01\41500\drafting\sheets\0113000127va054.dgn

4-30-13

| DIST | COUNTY | ROUTE | POST MILES TOTAL PROJECT | SHEET No. | TOTAL SHEETS |
|---|---|---|---|---|---|
| 01 | Hum | 101 | 109.5/R125.8 | 97 | 100 |

REGISTERED CIVIL ENGINEER

April 19, 2013
PLANS APPROVAL DATE

Gurinderpal Bhullar No. C48815 Exp. 9-30-14 CIVIL
REGISTERED PROFESSIONAL ENGINEER STATE OF CALIFORNIA

THE STATE OF CALIFORNIA OR ITS OFFICIALS OR AGENTS SHALL NOT BE RESPONSIBLE FOR THE ACCURACY OR COMPLETENESS OF SCANNED COPIES OF THIS PLAN SHEET.

May 23, 2016

TO ACCOMPANY PLANS DATED _____

## NOTES:

See Revised Standard Plan RSP T9 for tables.

Use cone spacing X for taper segment, Y for tangent segment or Z for conflict situations, as approriate, per Table 1, unless X, Y, or Z cone spacing is shown on this sheet.

Unless otherwise specified in the special provisions, all temporary warning signs shall have black legend on fluorescent orange background.

California codes are designated by (CA). Otherwise, Federal (MUTCD) codes are shown.

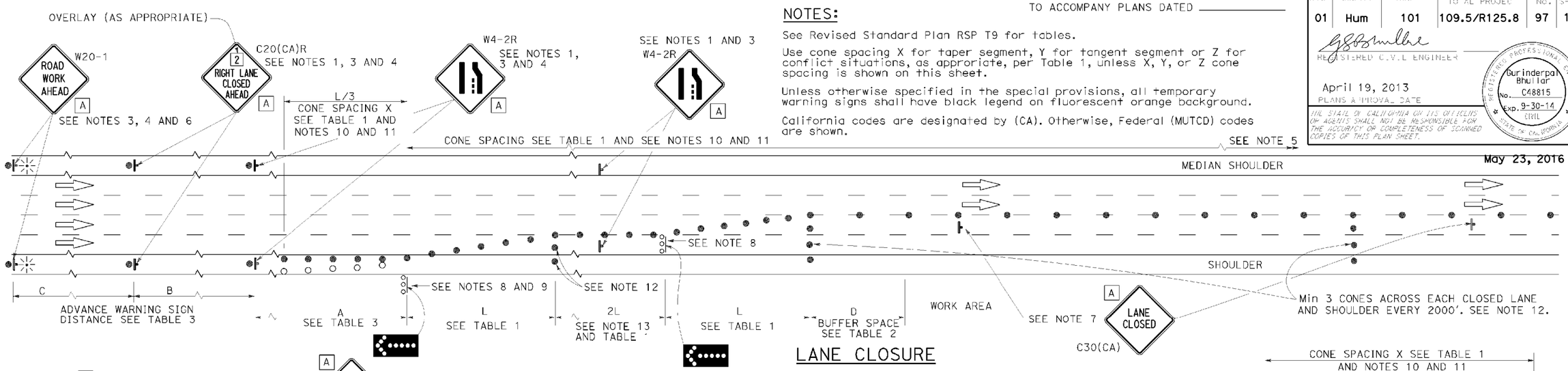


## LANE CLOSURE

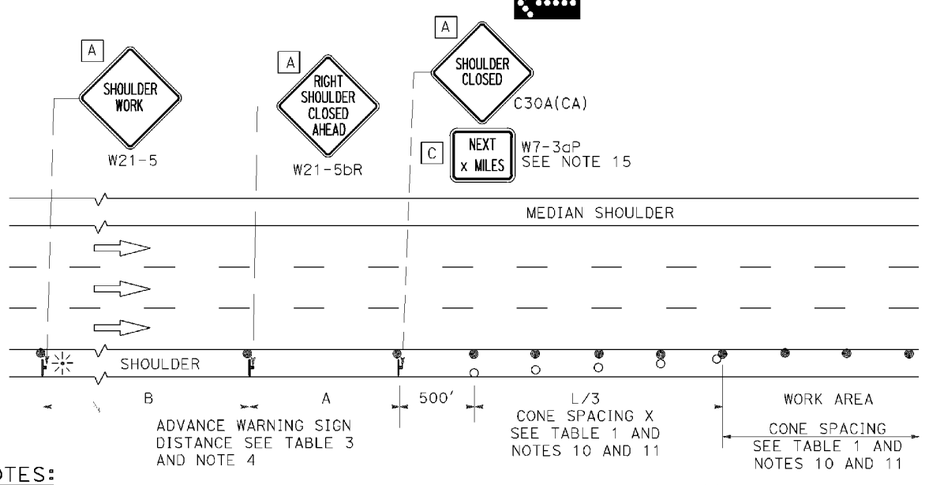


## SHOULDER CLOSURE

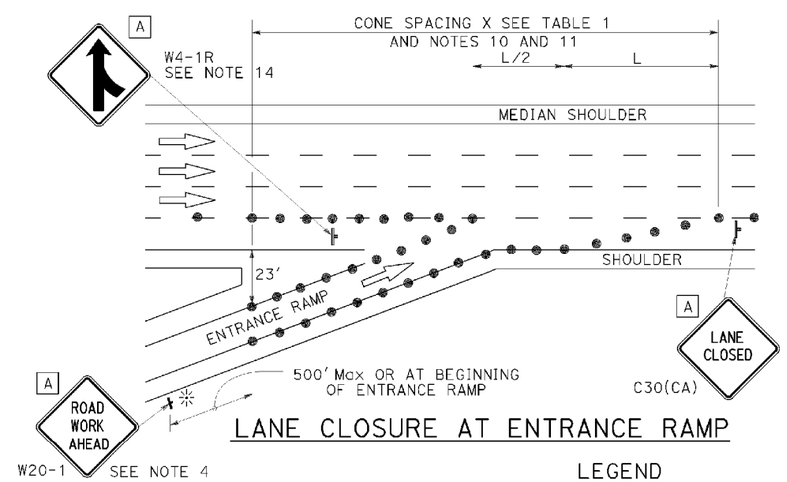


## LANE CLOSURE AT ENTRANCE RAMP

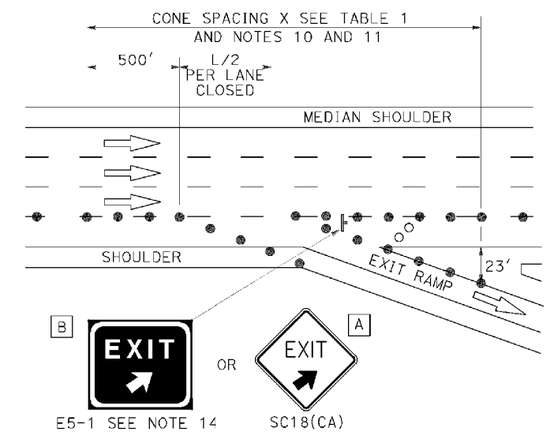


## LANE CLOSURE AT EXIT RAMP

## NOTES:

1. Median lane closures shall conform to the details as shown except that C20(CA)L and W4-2L signs shall be used.
2. At least one person shall be assigned to provide full time maintenance of traffic control devices for lane closures.
3. Duplicate sign installations are not required:
   a) On opposite shoulder if at least one-half of the available lanes remain open to traffic.
   b) In the median if the width of the median shoulder is less than 8' and the outside lanes are to be closed.
4. Each advance warning sign on each side of the roadway shall be equipped with at least two flags for daytime closure. Each flag shall be at least 16" x 16" in size and shall be orange or fluorescent red-orange in color. Flashing beacons shall be placed at the locations indicated for lane closure during hours of darkness.
5. A G20-2 "END ROAD WORK" sign, with minimum size of 48" x 24" as appropriate, shall be placed at the end of the lane closure unless the end of work area is obvious or ends within a larger project's limits.
6. If the W20-1 sign would follow within 2000' of a stationary W20-1 or G20-1 "ROAD WORK NEXT _____ MILES", use a C20(CA) sign for the first advance warning sign.
7. Place a C30(CA) sign every 2000' throughout length of lane closure.
8. One flashing arrow sign for each lane closed. The flashing arrow signs shall be Type I.
9. A minimum 1500' of sight distance shall be provided where possible for vehicles approaching the first flashing arrow sign. Lane closures shall not begin at top of crest vertical curve or on a horizontal curve.
10. All cones used for lane closures during the hours of darkness shall be fitted with retroreflective bands (or sleeves) as specified in the specifications.
11. Portable delineators, placed at one-half the spacing indicated for traffic cones may be used instead of cones for daytime closures only.
12. Unless otherwise specified in the special provisions, a minimum of 3 cones shall be placed transversely across each closed lane and shoulder at each location where a taper across a traffic lane ends and every 2000' as shown on the "Lane Closure" detail. Two Type II barricades may be used instead of the 3 cones. The transverse alignment of the cones or barricades on the closed shoulder may be shifted from the transverse alignment to provide access to the work.
13. Unless otherwise specified in the special provisions, the 2L tangent shown along lane lines shall be used between the L tapers required for each closed traffic lane.
14. Unless otherwise specified in the special provisions, the E5-1 or SC18(CA) and W4-1 signs shall be used as shown.
15. A W7-3aP "NEXT ___ MILES" plaque must be used if theshoulder closure extends beyond the distance that can be perceived by road users.

## LEGEND

- TRAFFIC CONE
- TRAFFIC CONE (OPTIONAL TAPER)
- TEMPORARY TRAFFIC CONTROL SIGN
- FLASHING ARROW SIGN (FAS)
- FAS SUPPORT OR TRAILER
- PORTABLE FLASHING BEACON

## SIGN PANEL SIZE (Min)

| | |
|---|---|
| A | 48" x 48" |
| B | 72" x 60" |
| C | 36" x 30" |

STATE OF CALIFORNIA
DEPARTMENT OF TRANSPORTATION

# TRAFFIC CONTROL SYSTEM FOR LANE CLOSURE ON FREEWAYS AND EXPRESSWAYS

NO SCALE

RSP T10 DATED APRIL 19, 2013 SUPERSEDES STANDARD PLAN T10 DATED MAY 20, 2011 - PAGE 237 OF THE STANDARD PLANS BOOK DATED 2010.

**REVISED STANDARD PLAN RSP T10**

**2010 REVISED STANDARD PLAN RSP T10**

P:\PROJ\01\41500\drafting\sheets\0113000127va055.dgn

'2-18-'2

| DIST | COUNTY | ROUTE | POST MILES TOTAL PROJECT | SHEET No. | TOTAL SHEETS |
|---|---|---|---|---|---|
| 01 | Hum | 101 | 109.5/R125.8 | 98 | 100 |

REGISTERED CIVIL ENGINEER

April 19, 2013
PLANS APPROVAL DATE

REGISTERED PROFESSIONAL ENGINEER
Gurinderpal Bhullar
No. C48815
Exp. 9-30-14
CIVIL
STATE OF CALIFORNIA

THE STATE OF CALIFORNIA OR ITS OFFICERS OR AGENTS SHALL NOT BE RESPONSIBLE FOR THE ACCURACY OR COMPLETENESS OF SCANNED COPIES OF THIS PLAN SHEET.

TO ACCOMPANY PLANS DATED May 23, 2016

2010 REVISED STANDARD PLAN RSP T11

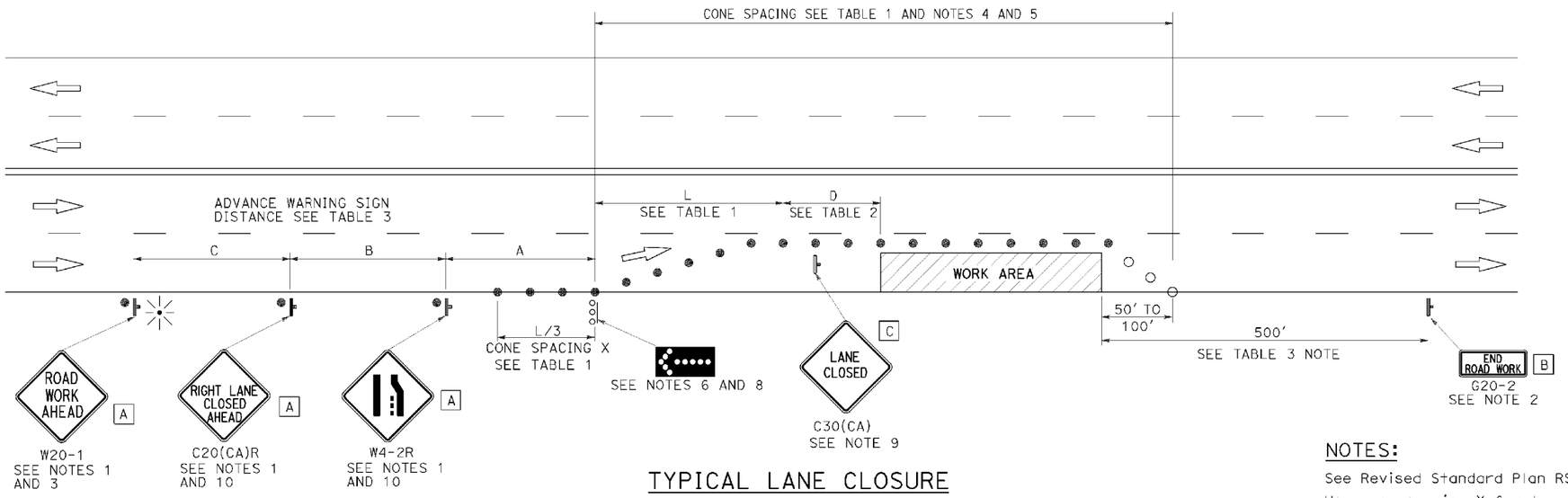


## TYPICAL LANE CLOSURE

## NOTES:

See Revised Standard Plan RSP T9 for tables.

Use cone spacing X for taper segment, Y for tangent segment or Z for conflict situations, as approriate, per Table 1, unless X, Y, or Z cone spacing is shown on this sheet.

Unless otherwise specified in the special provisions, all temporary warning signs shall have black legend on fluorescent orange background.

California codes are designated by (CA). Otherwise, Federal (MUTCD) codes are shown.

## NOTES:

1. Each advance warning sign shall be equipped with at least two flags for daytime closure. Each flag shall be at least 16" x 16" in size and shall be orange or fluorescent red-orange in color. Flashing beacons shall be placed at the locations indicated for lane closure during hours of darkness.
2. A G20-2 "END ROAD WORK" sign, as appropriate, shall be placed at the end of the lane closure unless the end of work area is obvious, or ends within a larger project's limits.
3. If the W20-1 sign would follow within 2000' of a stationary W20-1 or G20-1 "ROAD WORK NEXT _____ MILES", use a C20(CA) sign for the first advance warning sign.
4. All cones used for lane closures during the hours of darkness shall be fitted with retroreflective bands (or sleeves) as specified in the specifications.
5. Portable delineators, placed at one-half the spacing indicated for traffic cones, may be used instead of cones for daytime closures only.
6. Flashing arrow sign shall be either Type I or Type II.
7. For approach speeds over 50 mph, use the "Traffic Control System for Lane Closure On Freeways And Expressways" plan for lane closure details and requirements.
8. A minimum 1500' of sight distance shall be provided where possible for vehicles approaching the first flashing arrow sign. Lane closures shall not begin at the top of crest vertical curve or on a horizontal curve.
9. Place a C30(CA) sign every 2000' throughout length of lane closure.
10. Median lane closures shall conform to the details as shown except that C20(CA)L and W4-2L signs shall be used.
11. At least one person shall be assigned to provide full time maintenance of traffic control devices for lane closure unless, otherwise directed by the Engineer.

## LEGEND

- TRAFFIC CONE
- TRAFFIC CONE (OPTIONAL TAPER)
- TEMPORARY TRAFFIC CONTROL SIGN
- FLASHING ARROW SIGN (FAS)
- FAS SUPPORT OR TRAILER
- PORTABLE FLASHING BEACON

## SIGN PANEL SIZE (Min)

| | |
|---|---|
| A | 48" x 48" |
| B | 36" x 18" |
| C | 30" x 30" |

STATE OF CALIFORNIA
DEPARTMENT OF TRANSPORTATION

# TRAFFIC CONTROL SYSTEM FOR LANE CLOSURE ON MULTILANE CONVENTIONAL HIGHWAYS

NO SCALE

RSP T11 DATED APRIL 19, 2013 SUPERSEDES STANDARD PLAN T11 DATED MAY 20, 2011 - PAGE 239 OF THE STANDARD PLANS BOOK DATED 2010.

**REVISED STANDARD PLAN RSP T11**

P:\PROJ\01\41500\drafting\sheets\0113000127va056.dgn

4-2-13

| DIST | COUNTY | ROUTE | POST MILES TOTAL PROJECT | SHEET No. | TOTAL SHEETS |
|---|---|---|---|---|---|
| 01 | Hum | 101 | 109.5/R125.8 | 99 | 100 |

REGISTERED CIVIL ENGINEER

April 19, 2013
PLANS APPROVAL DATE

REGISTERED PROFESSIONAL ENGINEER
Gurinderpal Bhullar
No. C48815
Exp. 9-30-14
CIVIL
STATE OF CALIFORNIA

THE STATE OF CALIFORNIA OR ITS OFFICERS OR AGENTS SHALL NOT BE RESPONSIBLE FOR THE ACCURACY OR COMPLETENESS OF SCANNED COPIES OF THIS PLAN SHEET.

TO ACCOMPANY PLANS DATED May 23, 2016

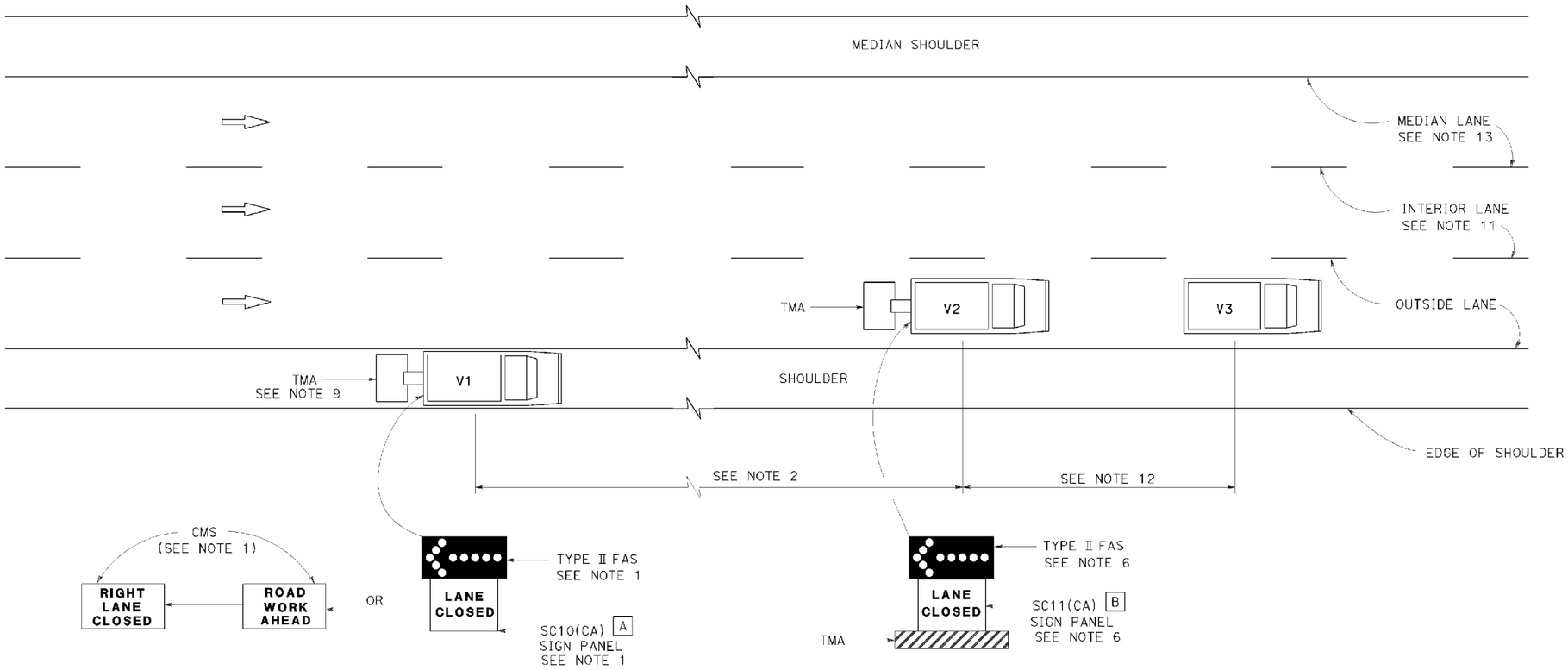


## MOVING LANE CLOSURE ON MEDIAN LANE OR OUTSIDE LANE OF MULTILANE HIGHWAYS

### SIGN PANEL SIZE (Min)

A 66" x 36"

B 54" x 42"

### LEGEND

| | |
|---|---|
| V1 | SIGN VEHICLE |
| V2 | SHADOW VEHICLE |
| V3 | WORK/APPLICATION VEHICLE |
| | FLASHING ARROW SIGN (FAS) |
| CMS | CHANGEABLE MESSAGE SIGN |
| TMA | TRUCK-MOUNTED ATTENUATOR |

### NOTES:

1. Either a changeable message sign or a SC10(CA) sign panel and a Type II flashing arrow sign shall be mounted on the rear of sign vehicle V1. The changeable message sign shall be sequenced to show the "ROAD WORK AHEAD" message first, followed by the "RIGHT LANE CLOSED" message. For median lane closure, the flashing arrow symbol shall be reversed with the arrowhead on the right and the changeable message sign shall show "LEFT LANE CLOSED".
2. If traffic queues develop, sign vehicle V1 should be positioned upstream from the end of queue. Sign vehicle V1 shall be positioned where highly visible when shoulders are not available.
3. A minimum sight distance of 1500' should be provided in advance of sign vehicle V1.
4. Sign vehicle V1 should remain at the beginning of horizontal or vertical curves until the other vehicles (V2 and V3) are far enough beyond the curve to resume the minimum sight distance of 1500'.
5. Vehicle-mounted sign panels shall have Type III or above retroreflective sheeting, black on white, or black on fluorescent orange, with 6" minimum series D letters per Caltrans sign specifications.
6. Shadow vehicle V2 shall be equipped with a truck-mounted attenuator. The sign panel shown and a Type II flashing arrow sign shall be mounted on the rear of shadow vehicle V2. For median lane closure the flashing arrow sign symbol shall be displayed with the arrowhead on the right.
7. All vehicles used for lane closures shall be equipped with two-way radios, and the vehicle operators shall maintain communication during the work or application operation.
8. All vehicles shall be equipped with flashing or rotating amber lights.
9. If sign vehicle V1 encroaches into the traffic lane due to insufficient shoulder width, sign vehicle V1 shall be equipped with a truck-mounted attenuator. Sign vehicle V1 shall stay as close to the edge of shoulder as practicable.
10. Where workers would be on foot in the work area, a stationary type lane closure (Revised Standard Plan T10, T11, etc., as applicable) shall be used instead of this plan.
11. For moving lane closure on interior lane of multilane highways, use Revised Standard Plan T16.
12. The spacing between work vehicle(s) and the shadow vehicles, and between each shadow vehicle should be minimized to deter road users from driving in between.
13. When the work/application vehicle V3 occupies the median lane, sign vehicle V1 should drive in the median shoulder and indicate left lane closed ahead.

STATE OF CALIFORNIA
DEPARTMENT OF TRANSPORTATION

# TRAFFIC CONTROL SYSTEM FOR MOVING LANE CLOSURE ON MULTILANE HIGHWAYS

NO SCALE

RSP T15 DATED APRIL 19, 2013 SUPERSEDES STANDARD PLAN T15 DATED MAY 20, 2011 - PAGE 243 OF THE STANDARD PLANS BOOK DATED 2010.

**REVISED STANDARD PLAN RSP T15**

**2010 REVISED STANDARD PLAN RSP T15**

P:\PROJ\01\41500\drafting\sheets\0113000127va057.dgn

| DIST | COUNTY | ROUTE | POST MILES TOTAL PROJECT | SHEET No. | TOTAL SHEETS |
|---|---|---|---|---|---|
| 01 | Hum | 101 | 109.5/R125.8 | 100 | 100 |

REGISTERED CIVIL ENGINEER

April 19, 2013
PLANS APPROVAL DATE

REGISTERED PROFESSIONAL ENGINEER
Gurinderpal Bhullar
No. C48815
Exp. 9-30-14
CIVIL
STATE OF CALIFORNIA

THE STATE OF CALIFORNIA OR ITS OFFICIALS OR AGENTS SHALL NOT BE RESPONSIBLE FOR THE ACCURACY OR COMPLETENESS OF SCANNED COPIES OF THIS PLAN SHEET.

TO ACCOMPANY PLANS DATED May 23, 2016

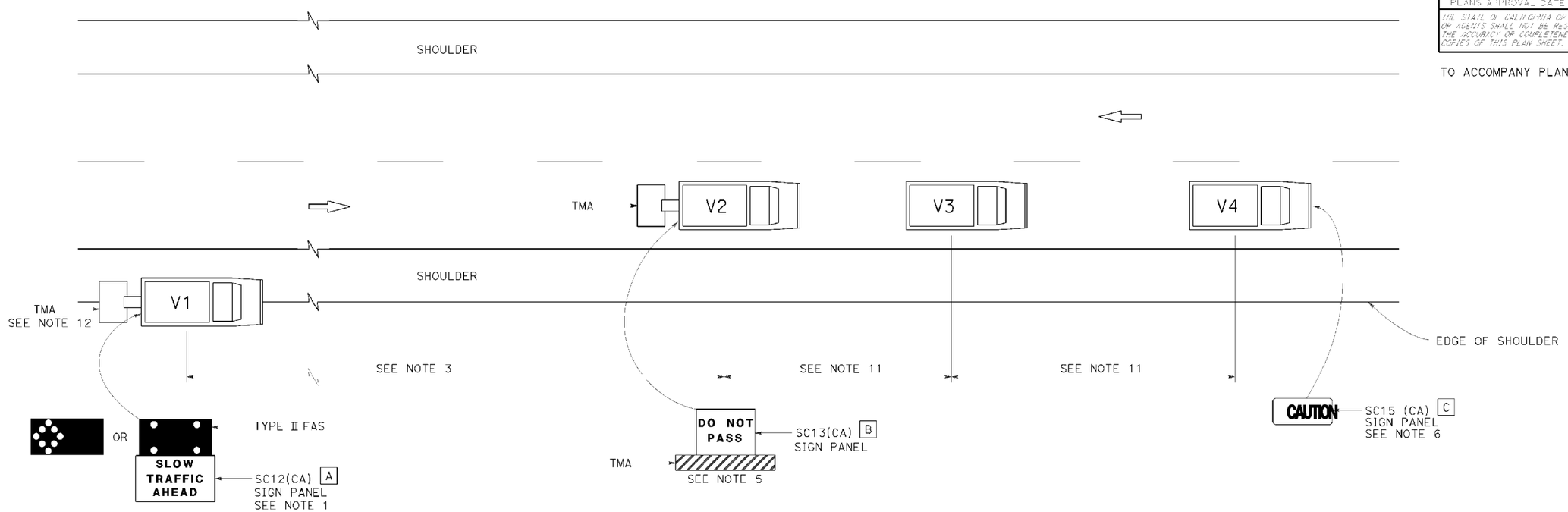


## LEGEND

| | |
|---|---|
| V1 | SIGN VEHICLE |
| V2 | SHADOW VEHICLE |
| V3 | WORK/APPLICATION VEHICLE |
| V4 | SIGN VEHICLE |
| TMA | TRUCK-MOUNTED ATTENUATOR |
| | FLASHING ARROW SIGN (FAS) IN FLASHING CAUTION MODE |
| | FLASHING ARROW SIGN (FAS) IN ALTERNATING DIAMOND CAUTION |

## SIGN PANEL SIZE (Min)

| | |
|---|---|
| A | 72" × 42" |
| B | 54" × 42" |
| C | 54" × 24" |

## NOTES:

1. Either a changeable message sign or a SC12(CA) "SLOW TRAFFIC AHEAD" sign shall be mounted on the rear of sign vehicle V1. The changeable message sign shall be sequenced to show the "CAUTION" message first, follow by the "SLOW TRAFFIC AHEAD" message. A Type II flashing arrow sign may be used with the SC12(CA) sign panel.
2. Sign vehicle V1 should be positioned where highly visible when shoulders are not available.
3. If traffic queues develop, sign vehicle V1 should be positioned upstream from the end of queue.
4. Vehicle-mounted sign panels shall have Type III or above retroreflective sheeting, black on white, or black on fluorescent orange, with 6" minimum series D letters per Caltrans sign specifications.
5. Shadow vehicle shall be equipped with a truck-mounted attenuator. The sign panel shown shall be mounted on the rear of shadow vehicle V2. The message "LANE CLOSED" may be used in place of the "DO NOT PASS" message.
6. The sign panel shown shall be mounted on the front of sign vehicle V4, facing opposing traffic.
7. All vehicles shall be equipped with flashing or rotating amber lights.
8. Sign vehicle V4 will not be required when the work and vehicles V2 and V3 are 2' or more from the centerline of the highway during the work or application operations.
9. All vehicles used for lane closures shall be equipped with two-way radios and the vehicle operators shall maintain communication during the work or application operation.
10. This plan shall not be used where workers would be on foot in the work area. Use a stationary type lane closure (Revised Standard Plan T13) for this condition.
11. Minimize spacing between vehicles V2 and V3 and vehicles V3 and V4 to deter road users from driving in between them.
12. If sign vehicle V1 encroaches into the traffic lane due to insufficient shoulder width, sign vehicle V1 shall be equipped with a truck-mounted attenuator. Sign vehicle V1 shall stay as close to the edge of shoulder as practicable.

STATE OF CALIFORNIA
DEPARTMENT OF TRANSPORTATION

# TRAFFIC CONTROL SYSTEM FOR MOVING LANE CLOSURE ON TWO LANE HIGHWAYS

NO SCALE

RSP T17 DATED APRIL 19, 2013 SUPERSEDES STANDARD PLAN T17 DATED MAY 20, 2011 - PAGE 245 OF THE STANDARD PLANS BOOK DATED 2010.

**REVISED STANDARD PLAN RSP T17**

**2010 REVISED STANDARD PLAN RSP T17**

P:\PROJ\01\41500\drafting\sheets\0113000127va058.dgn

12-18-12