Dist	COUNTY	ROUTE	POST MILES TOTAL PROJECT	SHEET No.	TOTAL SHEETS
04	Son	12, 101	R16.0, 19.6	1	60

ACNH-X097(043)E

STATE OF CALIFORNIA
DEPARTMENT OF TRANSPORTATION

PROJECT PLANS FOR CONSTRUCTION ON
STATE HIGHWAY

IN SONOMA COUNTY
IN SANTA ROSA
AT ROUTE 12/101 SEPARATION

TO BE SUPPLEMENTED BY STANDARD PLANS DATED 2010

INDEX OF PLANS

SHEET No.	DESCRIPTION
1	TITLE SHEET AND LOCATION MAP
2	LOCATIONS OF CONSTRUCTION
3 - 9	TYPICAL CROSS SECTIONS
10 - 16	LAYOUT
17	CONSTRUCTION DETAILS
18 - 25	TEMPORARY WATER POLLUTION CONTROL PLAN AND QUANTITIES
26 - 31	DRAINAGE PLAN, PROFILES, DETAILS AND QUANTITIES
32 - 37	CONSTRUCTION AREA SIGNS
38	SUMMARY OF QUANTITIES
39 - 41	EROSION CONTROL LEGEND, DETAILS AND QUANTITIES
42 - 60	REVISED STANDARD PLANS

THE STANDARD PLANS LIST APPLICABLE TO THIS CONTRACT IS INCLUDED IN THE NOTICE TO BIDDERS AND SPECIAL PROVISIONS BOOK.

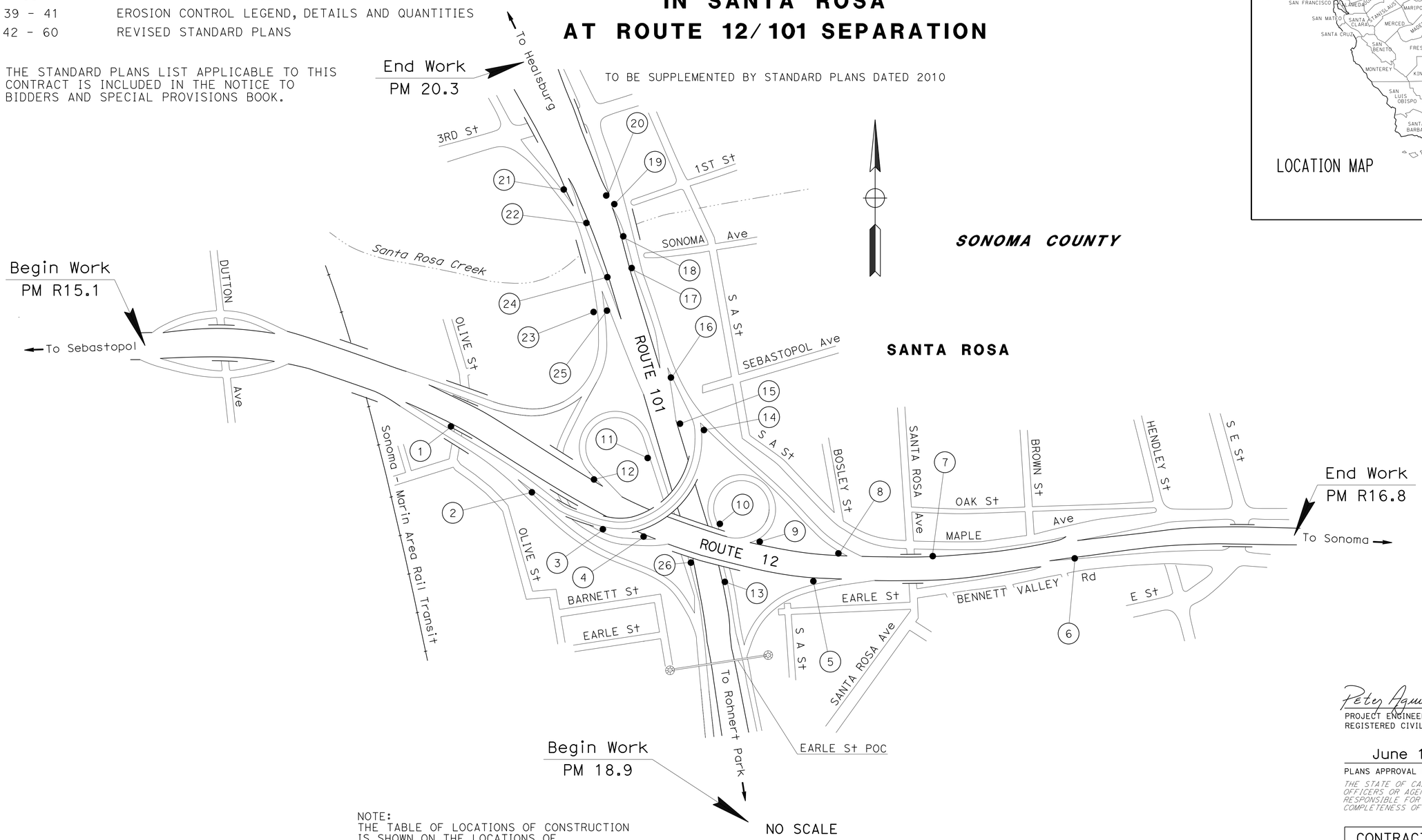

SONOMA COUNTY

NOTE:
THE TABLE OF LOCATIONS OF CONSTRUCTION IS SHOWN ON THE LOCATIONS OF CONSTRUCTION SHEET.

THE CONTRACTOR SHALL POSSESS THE CLASS (OR CLASSES) OF LICENSE AS SPECIFIED IN THE "NOTICE TO BIDDERS."

Peter Aguilera 5-25-16
PROJECT ENGINEER DATE
REGISTERED CIVIL ENGINEER

June 17, 2016
PLANS APPROVAL DATE

REGISTERED PROFESSIONAL ENGINEER Peter Aguilera No. 55287 Exp. 12-31-16 CIVIL STATE OF CALIFORNIA

THE STATE OF CALIFORNIA OR ITS OFFICERS OR AGENTS SHALL NOT BE RESPONSIBLE FOR THE ACCURACY OR COMPLETENESS OF SCANNED COPIES OF THIS PLAN SHEET.

PROJECT MANAGER ERIC SCHEN
DESIGN MANAGER ARLISSA PANG

CONTRACT No.	04-3G7204
PROJECT ID	0412000157

LAST REVISION 06-17-16
DATE PLOTTED => 11-AUG-2016
TIME PLOTTED => 09:32

Dist	COUNTY	ROUTE	POST MILES TOTAL PROJECT	SHEET No.	TOTAL SHEETS
04	Son	12, 101	R16.0, 19.6	2	60

Peter Aguilera 5-25-16
REGISTERED CIVIL ENGINEER DATE

6-17-16
PLANS APPROVAL DATE

REGISTERED PROFESSIONAL ENGINEER
Peter Aguilera
No. 55287
Exp. 12-31-16
CIVIL
STATE OF CALIFORNIA

THE STATE OF CALIFORNIA OR ITS OFFICERS OR AGENTS SHALL NOT BE RESPONSIBLE FOR THE ACCURACY OR COMPLETENESS OF SCANNED COPIES OF THIS PLAN SHEET.

LOCATIONS OF CONSTRUCTION

LOCATION	ROUTE	PM	DIRECTION	DESCRIPTION	TYPE OF WORK
1	12	R15.69	EB	EB Rte 12 CONNECTOR TO Rte 101	PAVE GORE AREA
2		R15.91		EB Rte 12 CONNECTOR TO SB Rte 101	
3		R15.92		SB Rte 101 CONNECTOR TO EB Rte 12	CONSTRUCT MVP
4		R16.00			PAVE GORE AREA
5		R16.16		NB Rte 101 CONNECTOR TO EB Rte 12	PAVE GORE AREA
6		R16.46		SOUTH E St EB OFF-RAMP	
7		R16.30	WB	WB Rte 12, SANTA ROSA Ave UC	PAVE NARROW AREA
8		R16.16		WB Rte 12 CONNECTOR TO NB Rte 101	PAVE GORE AREA
9		R16.08		NB Rte 101 CONNECTOR TO WB Rte 12	PAVE GORE AREA
10		R16.06			CONSTRUCT MVP
11		R15.98		WB Rte 12 CONNECTOR TO SB Rte 101	CONSTRUCT MVP
12		R15.93			PAVE GORE AREA
13	101	19.59	NB	NB Rte 101 AT Rte 12/101 SEPARATION	PAVE NARROW AREA
14		19.74		EB Rte 12 CONNECTOR TO NB Rte 101	PAVE GORE AREA
15		19.75		THIRD St NB OFF-RAMP	CONSTRUCT MVP
16		19.77			PAVE GORE AREA
17		19.95		NB ON-RAMP FROM Rte 12	PAVE GORE AREA
18		19.96			
19		20.02			
20		20.03		THIRD St NB OFF-RAMP	PAVE GORE AREA
21		20.04	SB	THIRD St SB ON-RAMP	PAVE GORE AREA
22		20.01		SB Rte 101 CONNECTOR TO WB Rte 12	PAVE GORE AREA
23		19.84			CONSTRUCT MVP
24		19.92		SB Rte 101, JUST SOUTH OF SANTA ROSA CREEK	PAVE NARROW AREA
25		19.84		SB Rte 101 CONNECTOR TO WB Rte 12	PAVE GORE AREA
26		19.63		SB Rte 101 AT Rte 12/101 SEPARATION	PAVE NARROW AREA

STATE OF CALIFORNIA - DEPARTMENT OF TRANSPORTATION
Caltrans® DESIGN

FUNCTIONAL SUPERVISOR: ARLISSA PANG
CALCULATED-DESIGNED BY: PETER AGUILERA
CHECKED BY: VAN HEW
REVISED BY: PA
DATE REVISED: 5-25-16

LOCATIONS OF CONSTRUCTION

LC-1

LAST REVISION 05-19-16
DATE PLOTTED => 11-AUG-2016
TIME PLOTTED => 09:32

Dist	COUNTY	ROUTE	POST MILES TOTAL PROJECT	SHEET No.	TOTAL SHEETS
04	Son	12, 101	R16.0, 19.6	3	60

Peter Aguilera 5-25-16
REGISTERED CIVIL ENGINEER DATE

6-17-16
PLANS APPROVAL DATE

REGISTERED PROFESSIONAL ENGINEER Peter Aguilera No. 55287 Exp. 12-31-16 CIVIL STATE OF CALIFORNIA

THE STATE OF CALIFORNIA OR ITS OFFICERS OR AGENTS SHALL NOT BE RESPONSIBLE FOR THE ACCURACY OR COMPLETENESS OF SCANNED COPIES OF THIS PLAN SHEET.

TYPICAL PAVEMENT STRUCTURAL SECTIONS

1 — 0.35′ MINOR Conc (Misc Const) 2 — 0.70′ HMA (TYPE A)

NOTES:

1. FOR VEGETATION CONTROL AROUND EXISTING MBGR, SEE SHEET C-1.
2. DIMENSIONS OF THE PAVEMENT STRUCTURES (STRUCTURAL SECTIONS) ARE SUBJECT TO TOLERANCES SPECIFIED IN THE STANDARD SPECIFICATIONS.
3. EXACT LOCATIONS AND TYPES OF HMA DIKE ARE SHOWN ON THE LAYOUTS AND IN THE SUMMARY OF QUANTITIES SHEET.

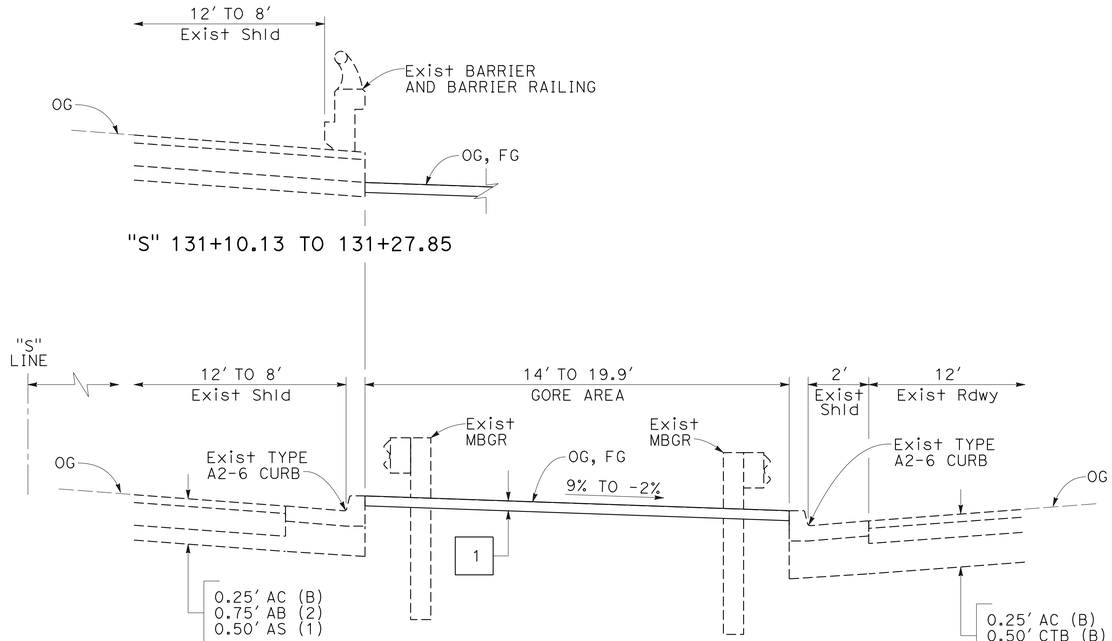

"S" 130+86.30 TO 131+27.85
PAVE GORE AREA
LOCATION 2

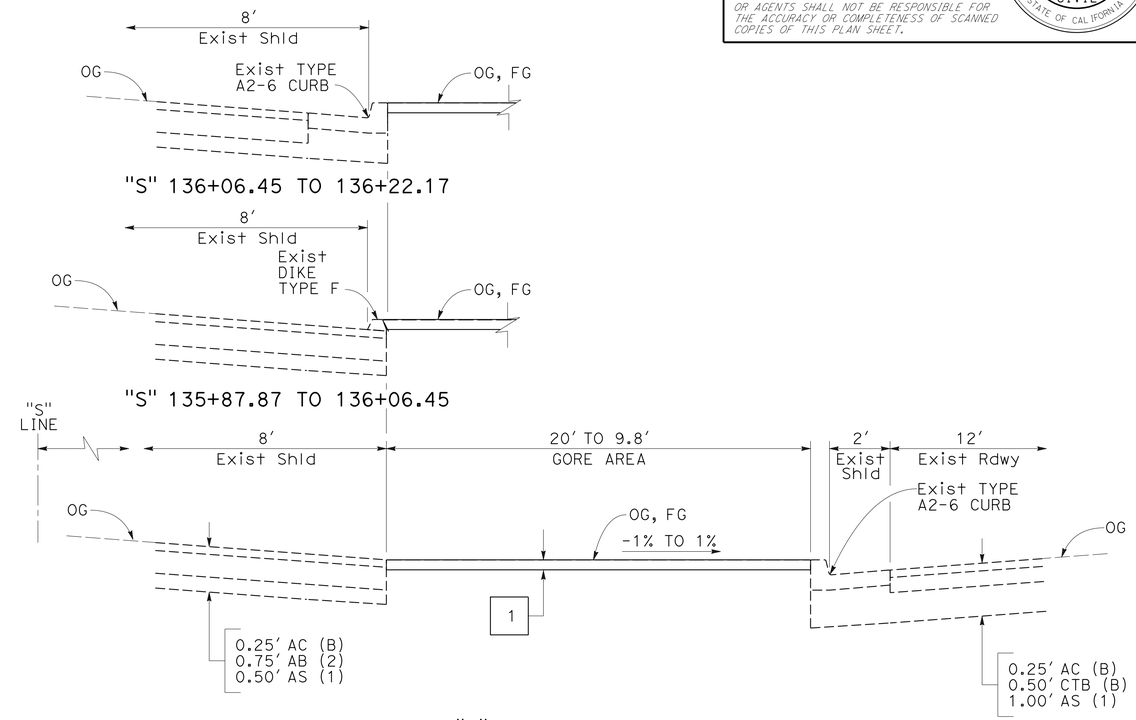

"S" 135+75 TO 136+22.17
PAVE GORE AREA
LOCATION 4

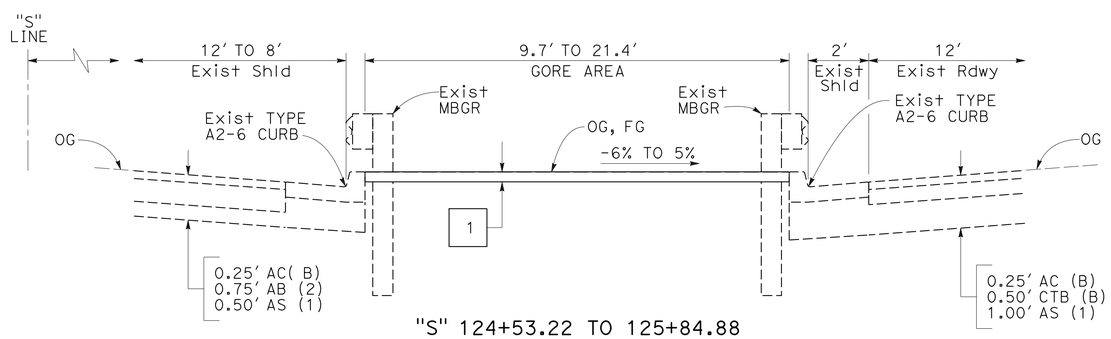

"S" 124+53.22 TO 125+84.88
PAVE GORE AREA
LOCATION 1

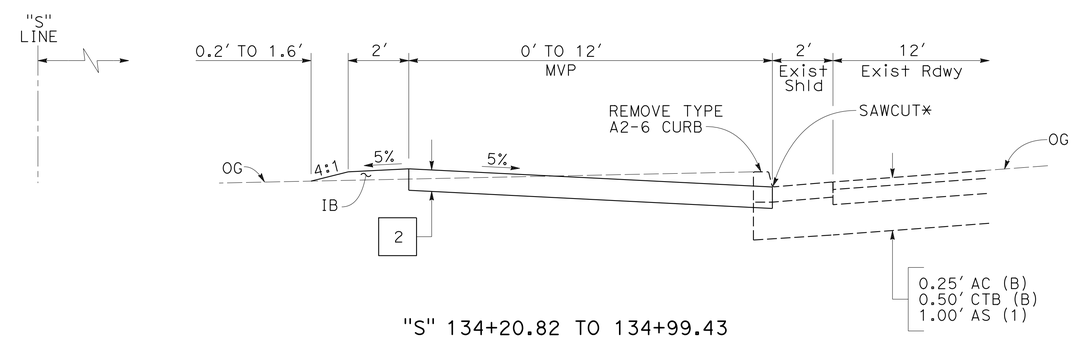

"S" 134+20.82 TO 134+99.43
MAINTENANCE VEHICLE PULLOUT (MVP)
LOCATION 3

* THE PERPENDICULAR SAWCUTS AT THE BEGINNING AND END OF THE MVP IS TO BE CUT AT 30° TO THE GROUND AND AWAY FROM THE MVP ENDS.

TYPICAL CROSS SECTIONS
NO SCALE

X-1

REVISED BY: PA — DATE REVISED: 5-25-16
CALCULATED-DESIGNED BY: PETER AGUILERA — CHECKED BY: VAN HEW
FUNCTIONAL SUPERVISOR: ARLISSA PANG

STATE OF CALIFORNIA - DEPARTMENT OF TRANSPORTATION
Caltrans®
DESIGN

LAST REVISION 05-24-16 | DATE PLOTTED => 11-AUG-2016 | TIME PLOTTED => 09:32

Dist	COUNTY	ROUTE	POST MILES TOTAL PROJECT	SHEET No.	TOTAL SHEETS
04	Son	12, 101	R16.0, 19.6	4	60

Peter Aguilera 5-25-16
REGISTERED CIVIL ENGINEER DATE

6-17-16
PLANS APPROVAL DATE

REGISTERED PROFESSIONAL ENGINEER
Peter Aguilera
No. 55287
Exp. 12-31-16
CIVIL
STATE OF CALIFORNIA

THE STATE OF CALIFORNIA OR ITS OFFICERS OR AGENTS SHALL NOT BE RESPONSIBLE FOR THE ACCURACY OR COMPLETENESS OF SCANNED COPIES OF THIS PLAN SHEET.

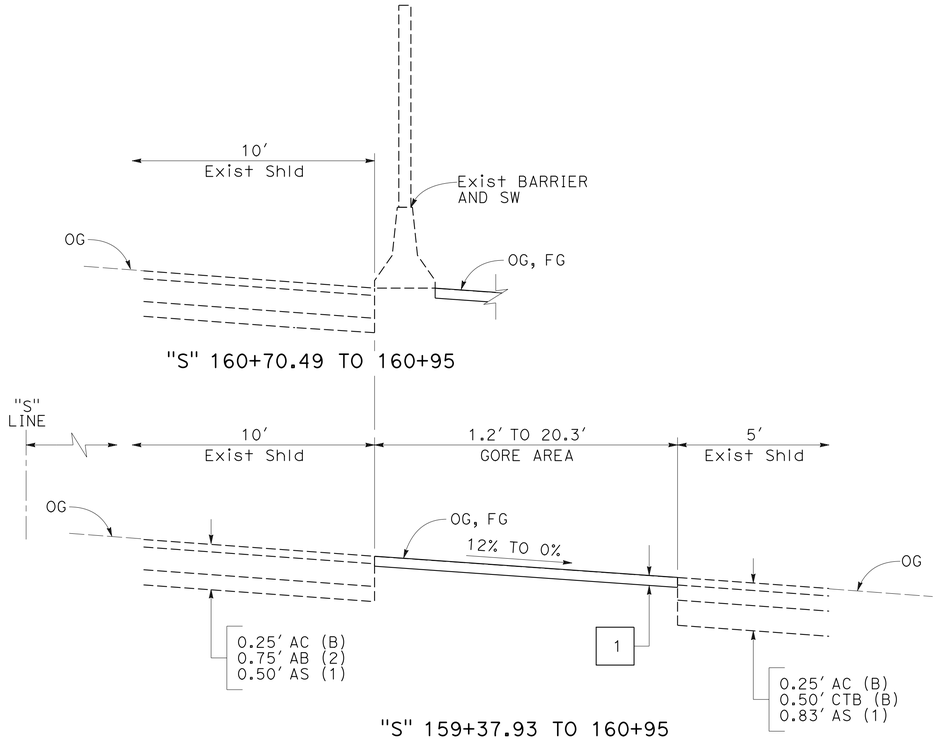

"S" 159+37.93 TO 160+95
PAVE GORE AREA
LOCATION 6

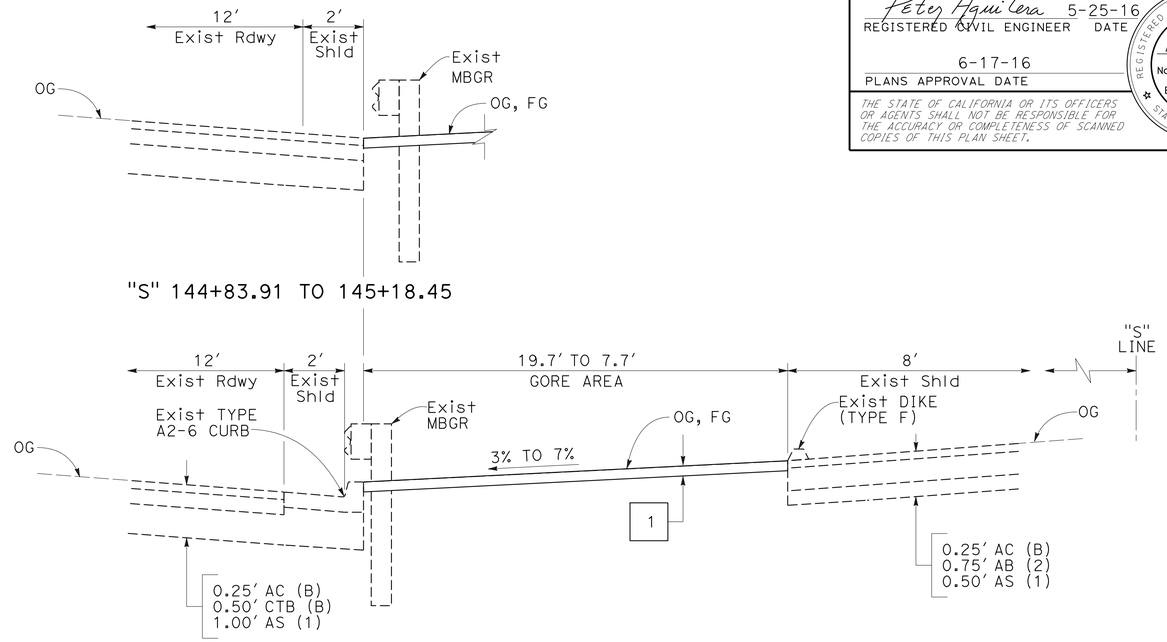

"S" 144+35 TO 145+18.45
PAVE GORE AREA
LOCATION 8

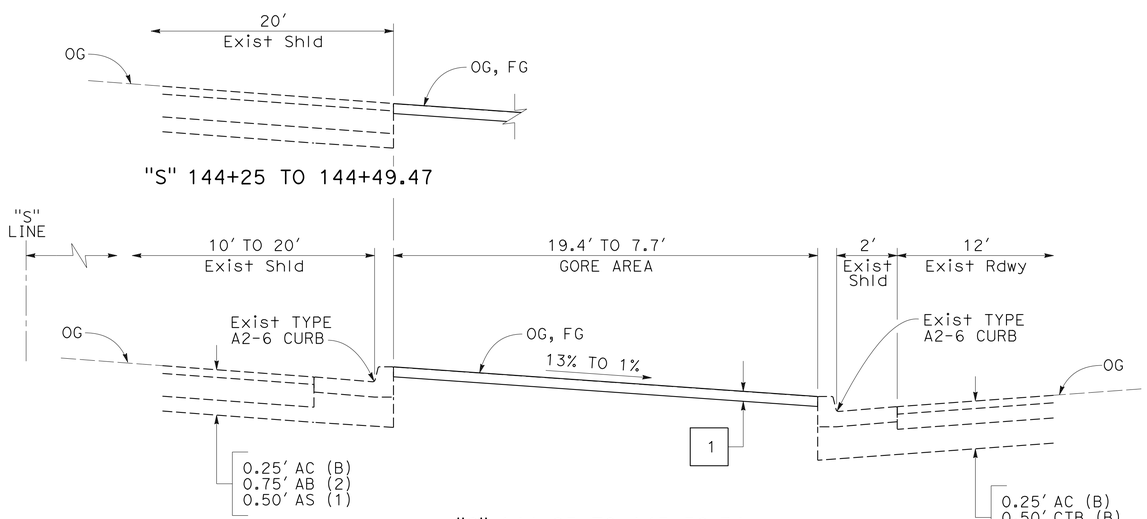

"S" 144+25 TO 145+56.74
PAVE GORE AREA
LOCATION 5

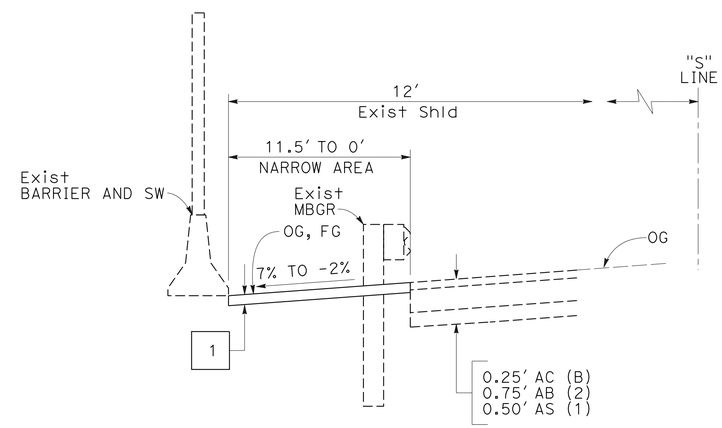

"S" 151+17.06 TO 152+49.33
PAVE NARROW AREA
LOCATION 7

TYPICAL CROSS SECTIONS
NO SCALE

FOR NOTES, ABBREVIATIONS AND LEGEND, SEE SHEET X-1

X-2

REVISED BY	DATE REVISED
PA	5-25-16

PETER AGUILERA — VAN HEW — CALCULATED-DESIGNED BY — CHECKED BY

FUNCTIONAL SUPERVISOR: ARLISSA PANG

STATE OF CALIFORNIA - DEPARTMENT OF TRANSPORTATION — DESIGN — Caltrans

LAST REVISION 05-24-16 | DATE PLOTTED => 11-AUG-2016 | TIME PLOTTED => 09:32

Dist	COUNTY	ROUTE	POST MILES TOTAL PROJECT	SHEET No.	TOTAL SHEETS
04	Son	12, 101	R16.0, 19.6	5	60

Peter Aguilera 5-25-16
REGISTERED CIVIL ENGINEER DATE

6-17-16
PLANS APPROVAL DATE

REGISTERED PROFESSIONAL ENGINEER
Peter Aguilera
No. 55287
Exp. 12-31-16
CIVIL
STATE OF CALIFORNIA

THE STATE OF CALIFORNIA OR ITS OFFICERS OR AGENTS SHALL NOT BE RESPONSIBLE FOR THE ACCURACY OR COMPLETENESS OF SCANNED COPIES OF THIS PLAN SHEET.

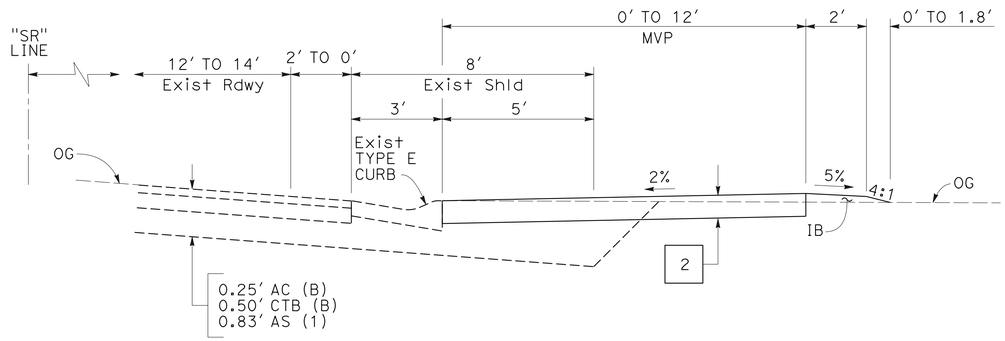

"SR" 114+27.22 TO 115+12.06
MAINTENANCE VEHICLE PULLOUT (MVP)
LOCATION 10

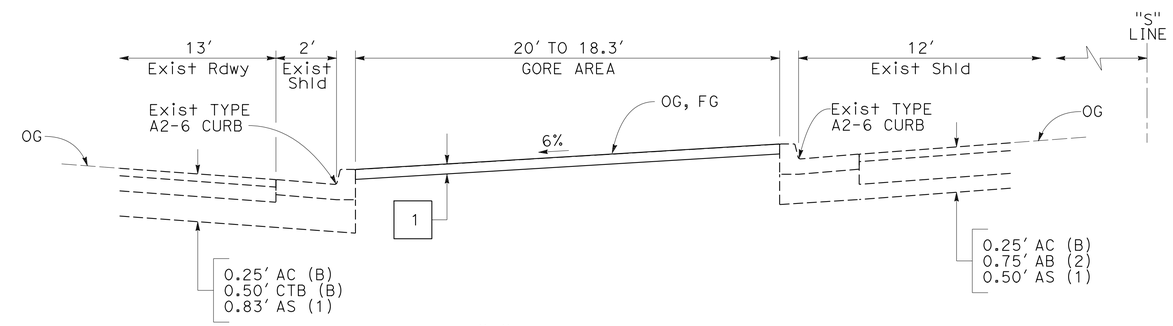

"S" 132+13.98 TO 132+22.06
PAVE GORE AREA
LOCATION 12

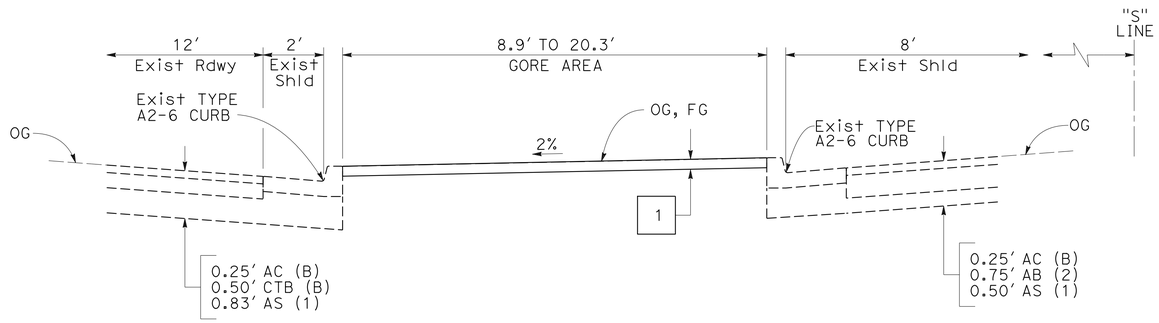

"S "139+70.36 TO 139+95
PAVE GORE AREA
LOCATION 9

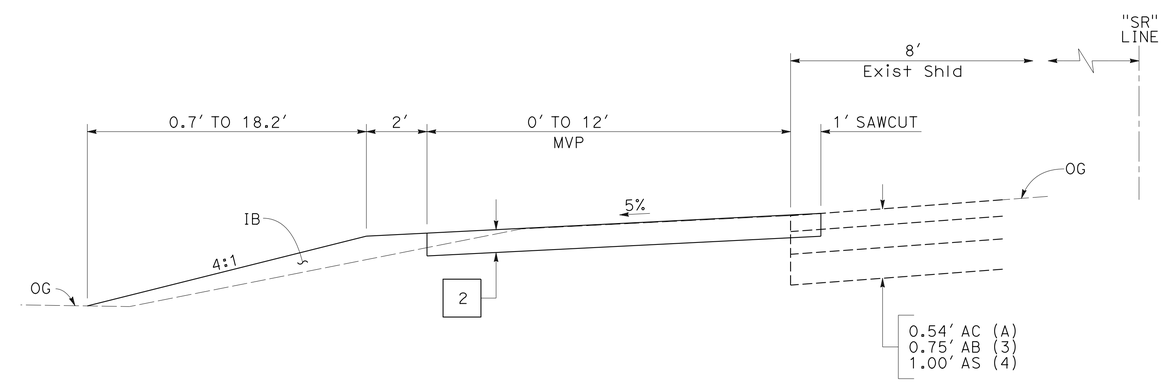

"SR" 117+65 TO 118+50
MAINTENANCE VEHICLE PULLOUT (MVP)
LOCATION 11

TYPICAL CROSS SECTIONS
NO SCALE

FOR NOTES, ABBREVIATIONS AND LEGEND, SEE SHEET X-1

X-3

REVISED BY	DATE REVISED
PA	5-25-16

PETER AGUILERA — VAN HEW — CALCULATED-DESIGNED BY — CHECKED BY
FUNCTIONAL SUPERVISOR: ARLISSA PANG
STATE OF CALIFORNIA - DEPARTMENT OF TRANSPORTATION
Caltrans
DESIGN

LAST REVISION 05-24-16 — DATE PLOTTED => 11-AUG-2016 — TIME PLOTTED => 09:32

Dist	COUNTY	ROUTE	POST MILES TOTAL PROJECT	SHEET No.	TOTAL SHEETS
04	Son	12, 101	R16.0, 19.6	6	60

Peter Aguilera 5-25-16
REGISTERED CIVIL ENGINEER DATE

6-17-16
PLANS APPROVAL DATE

REGISTERED PROFESSIONAL ENGINEER Peter Aguilera No. 55287 Exp. 12-31-16 CIVIL STATE OF CALIFORNIA

THE STATE OF CALIFORNIA OR ITS OFFICERS OR AGENTS SHALL NOT BE RESPONSIBLE FOR THE ACCURACY OR COMPLETENESS OF SCANNED COPIES OF THIS PLAN SHEET.

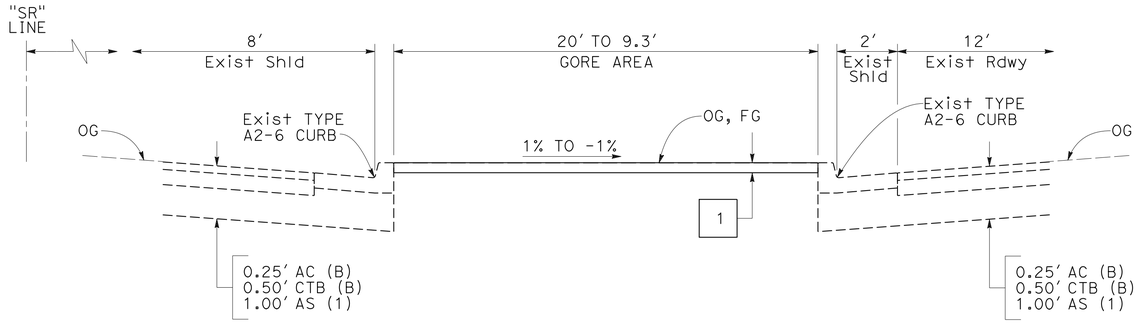

"SR" 118+60 TO 118+83.17
PAVE GORE AREA
LOCATION 14

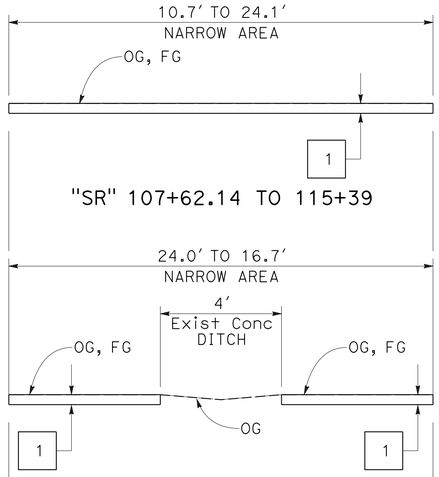

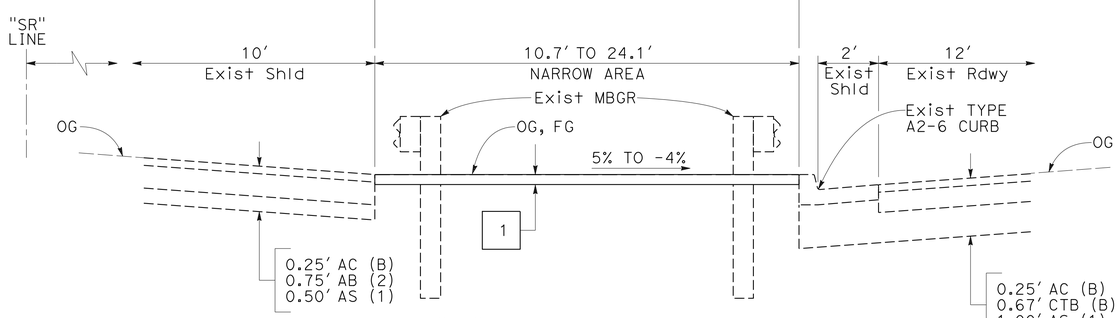

"SR" 107+62.14 TO 115+39
PAVE NARROW AREA
LOCATION 13

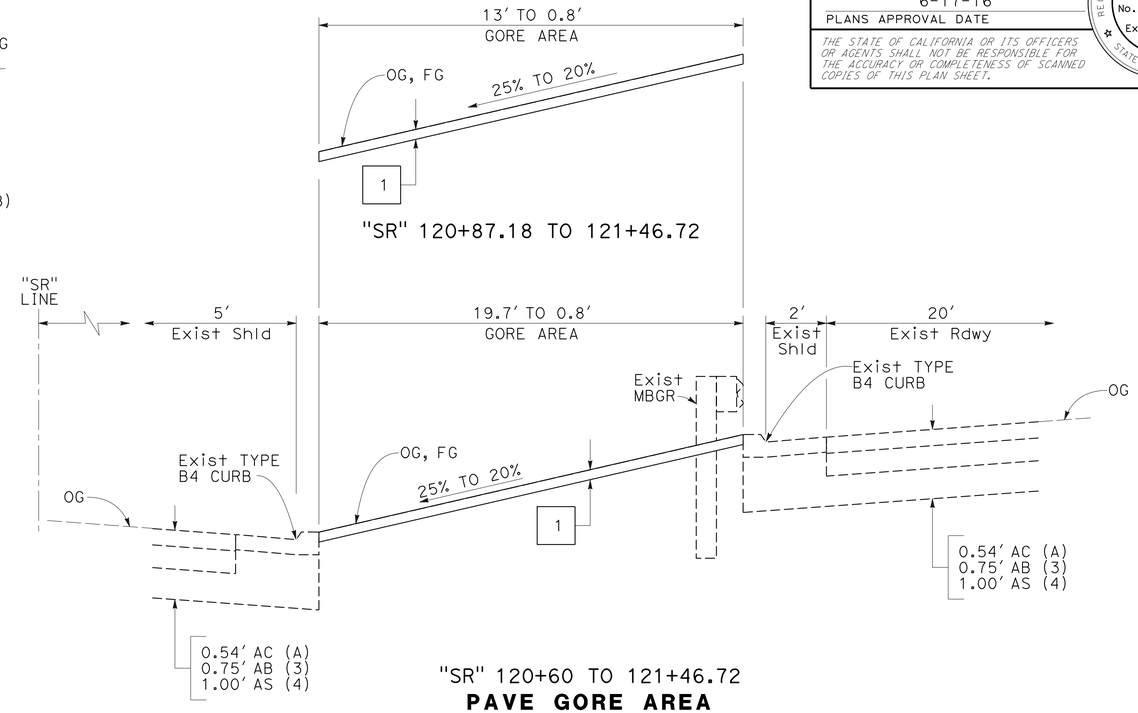

"SR" 120+60 TO 121+46.72
PAVE GORE AREA
LOCATION 16

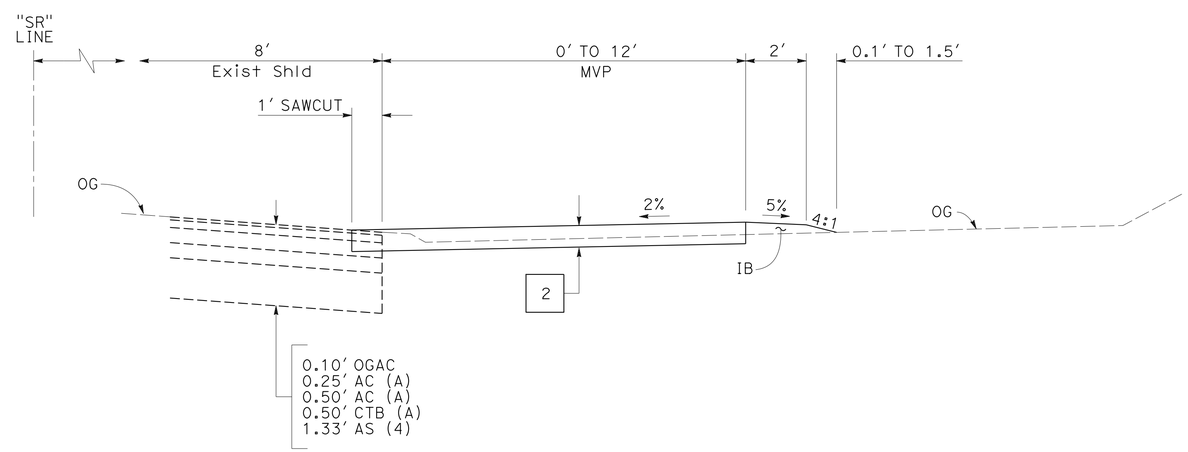

"SR" 118+65 TO 119+49.81
MAINTENANCE VEHICLE PULLOUT (MVP)
LOCATION 15

TYPICAL CROSS SECTIONS
NO SCALE

FOR NOTES, ABBREVIATIONS AND LEGEND, SEE SHEET X-1

X-4

STATE OF CALIFORNIA - DEPARTMENT OF TRANSPORTATION
Caltrans® **DESIGN**
FUNCTIONAL SUPERVISOR: ARLISSA PANG
CALCULATED-DESIGNED BY: PETER AGUILERA
CHECKED BY: VAN HEW
REVISED BY: PA
DATE REVISED: 5-25-16

LAST REVISION DATE PLOTTED => 11-AUG-2016
TIME PLOTTED => 09:32
05-24-16

Dist	COUNTY	ROUTE	POST MILES TOTAL PROJECT	SHEET No.	TOTAL SHEETS
04	Son	12, 101	R16.0, 19.6	7	60

Peter Aguilera 5-25-16
REGISTERED CIVIL ENGINEER DATE

6-17-16
PLANS APPROVAL DATE

REGISTERED PROFESSIONAL ENGINEER
Peter Aguilera
No. 55287
Exp. 12-31-16
CIVIL
STATE OF CALIFORNIA

THE STATE OF CALIFORNIA OR ITS OFFICERS OR AGENTS SHALL NOT BE RESPONSIBLE FOR THE ACCURACY OR COMPLETENESS OF SCANNED COPIES OF THIS PLAN SHEET.

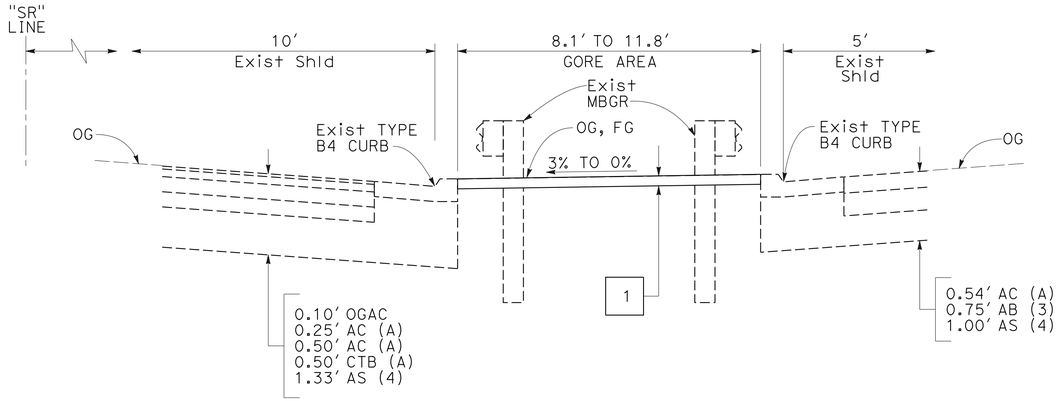

"SR" 130+37.07 TO 130+94.47
PAVE GORE AREA
LOCATION 18

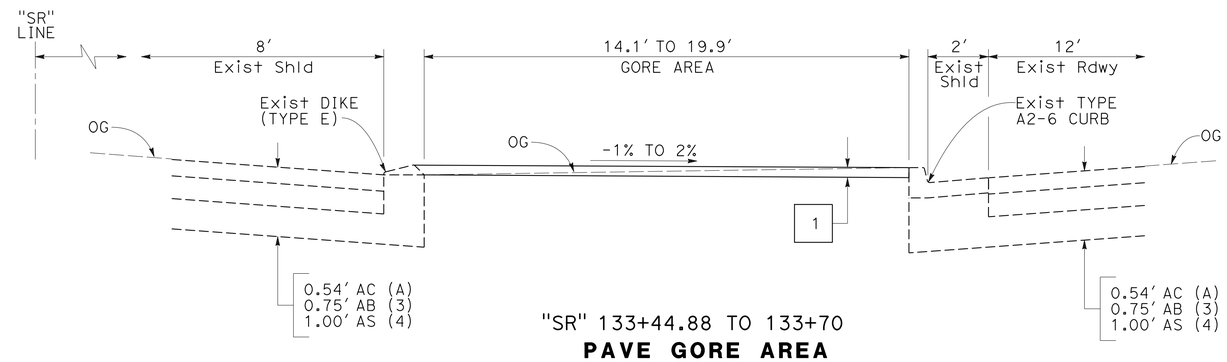

"SR" 133+44.88 TO 133+70
PAVE GORE AREA
LOCATION 20

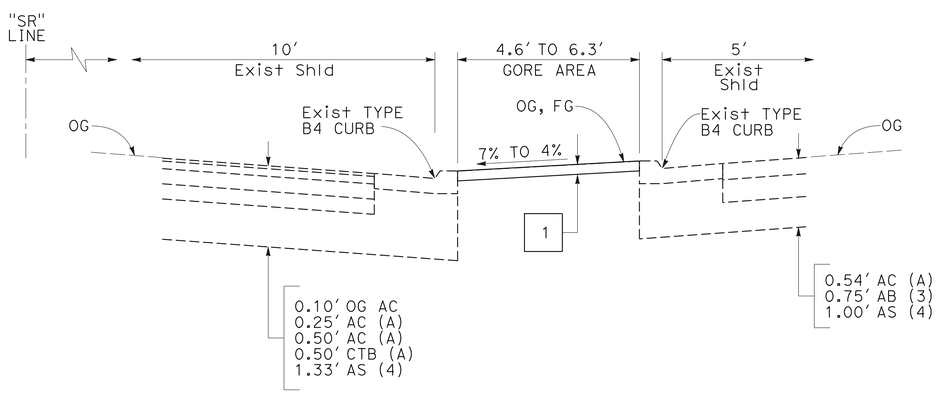

"SR" 129+52.74 TO 130+06.92
PAVE GORE AREA
LOCATION 17

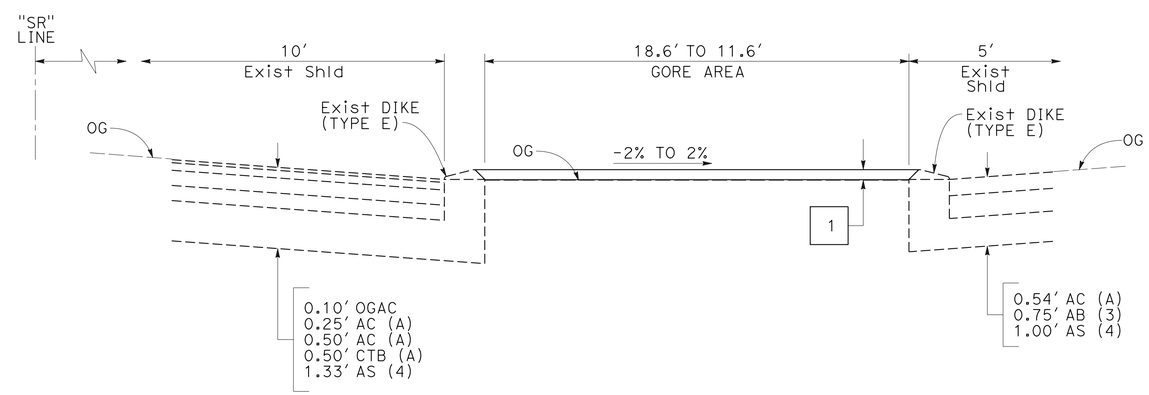

"SR" 132+99.49 TO 133+99.77
PAVE GORE AREA
LOCATION 19

TYPICAL CROSS SECTIONS
NO SCALE

FOR NOTES, ABBREVIATIONS AND LEGEND, SEE SHEET X-1

X-5

REVISED BY	DATE REVISED
PA	5-25-16

PETER AGUILERA — VAN HEW — CALCULATED-DESIGNED BY — CHECKED BY
FUNCTIONAL SUPERVISOR: ARLISSA PANG
STATE OF CALIFORNIA - DEPARTMENT OF TRANSPORTATION
Caltrans® **DESIGN**

LAST REVISION 05-24-16 — DATE PLOTTED => 11-AUG-2016 — TIME PLOTTED => 09:32

Dist	COUNTY	ROUTE	POST MILES TOTAL PROJECT	SHEET No.	TOTAL SHEETS
04	Son	12, 101	R16.0, 19.6	8	60

Peter Aguilera 5-25-16
REGISTERED CIVIL ENGINEER DATE

6-17-16
PLANS APPROVAL DATE

REGISTERED PROFESSIONAL ENGINEER Peter Aguilera No. 55287 Exp. 12-31-16 CIVIL STATE OF CALIFORNIA

THE STATE OF CALIFORNIA OR ITS OFFICERS OR AGENTS SHALL NOT BE RESPONSIBLE FOR THE ACCURACY OR COMPLETENESS OF SCANNED COPIES OF THIS PLAN SHEET.

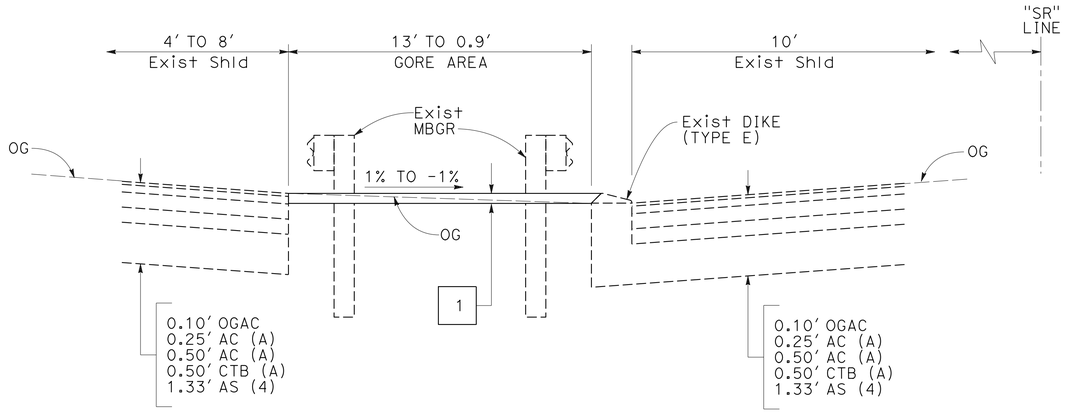

"SR" 132+49.47 TO 133+29.72
PAVE GORE AREA
LOCATION 22

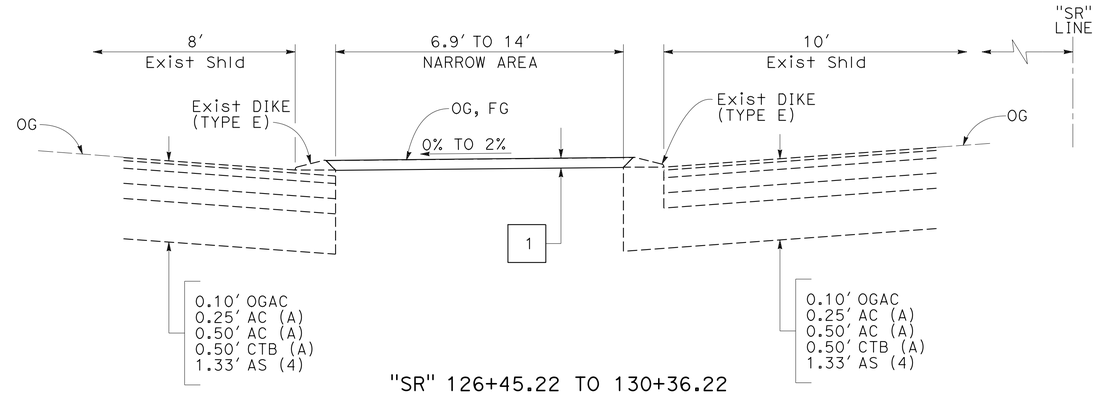

"SR" 126+45.22 TO 130+36.22
PAVE NARROW AREA
LOCATION 24

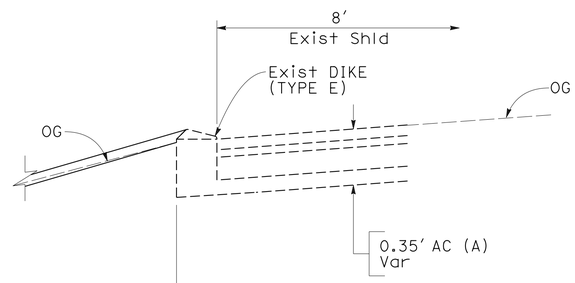

"SR" 134+26.12 TO 134+71

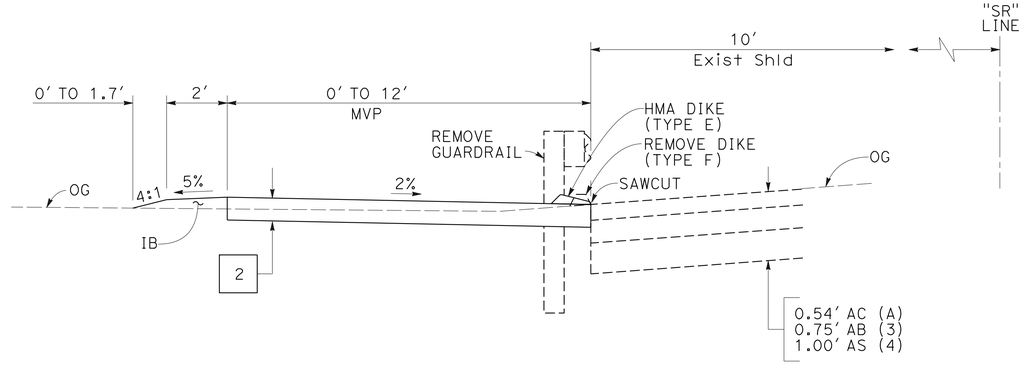

"SR" 124+20 TO 125+04.17
MAINTENANCE VEHICLE PULLOUT (MVP)
LOCATION 23

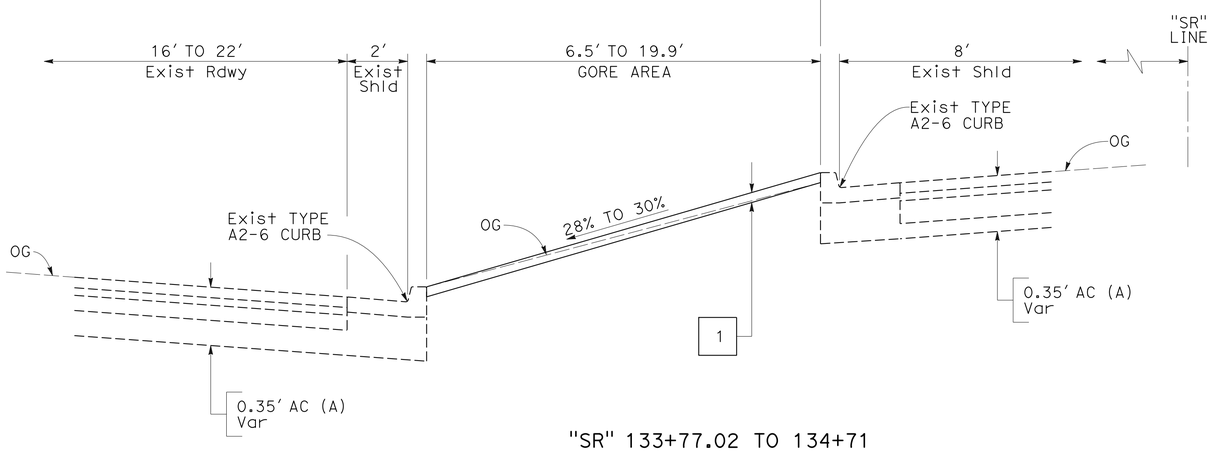

"SR" 133+77.02 TO 134+71
PAVE GORE AREA
LOCATION 21

TYPICAL CROSS SECTIONS
NO SCALE

FOR NOTES, ABBREVIATIONS AND LEGEND, SEE SHEET X-1

X-6

PA	5-25-16
REVISED BY	DATE REVISED
PETER AGUILERA	VAN HEW
CALCULATED-DESIGNED BY	CHECKED BY
FUNCTIONAL SUPERVISOR	ARLISSA PANG

STATE OF CALIFORNIA - DEPARTMENT OF TRANSPORTATION
Caltrans
DESIGN

LAST REVISION 05-24-16 | DATE PLOTTED => 11-AUG-2016 | TIME PLOTTED => 09:32

Dist	COUNTY	ROUTE	POST MILES TOTAL PROJECT	SHEET No.	TOTAL SHEETS
04	Son	12, 101	R16.0, 19.6	9	60

Peter Aguilera 5-25-16
REGISTERED CIVIL ENGINEER DATE

6-17-16
PLANS APPROVAL DATE

REGISTERED PROFESSIONAL ENGINEER
Peter Aguilera
No. 55287
Exp. 12-31-16
CIVIL
STATE OF CALIFORNIA

THE STATE OF CALIFORNIA OR ITS OFFICERS OR AGENTS SHALL NOT BE RESPONSIBLE FOR THE ACCURACY OR COMPLETENESS OF SCANNED COPIES OF THIS PLAN SHEET.

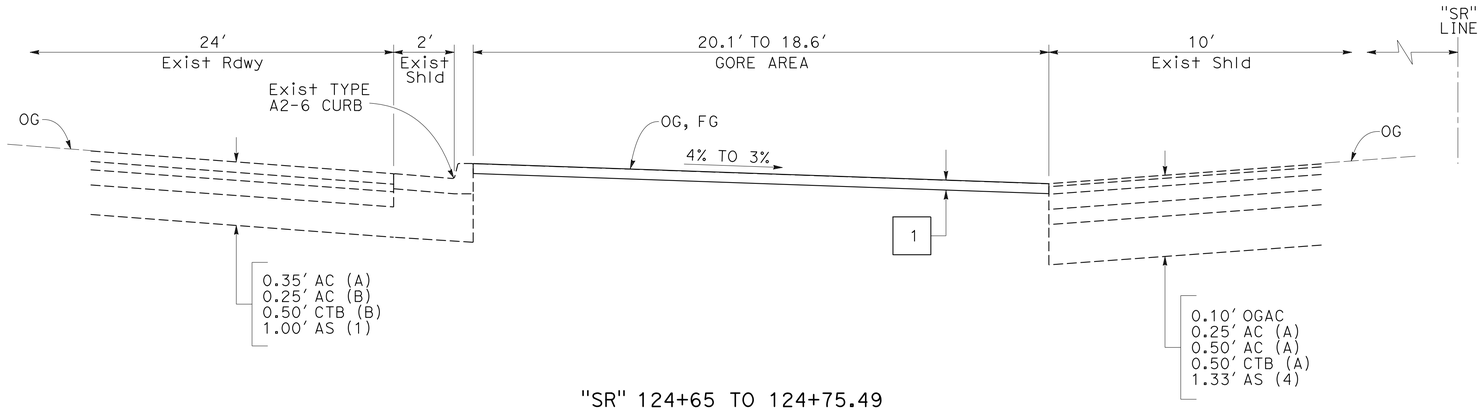

"SR" 124+65 TO 124+75.49
PAVE GORE AREA
LOCATION 25

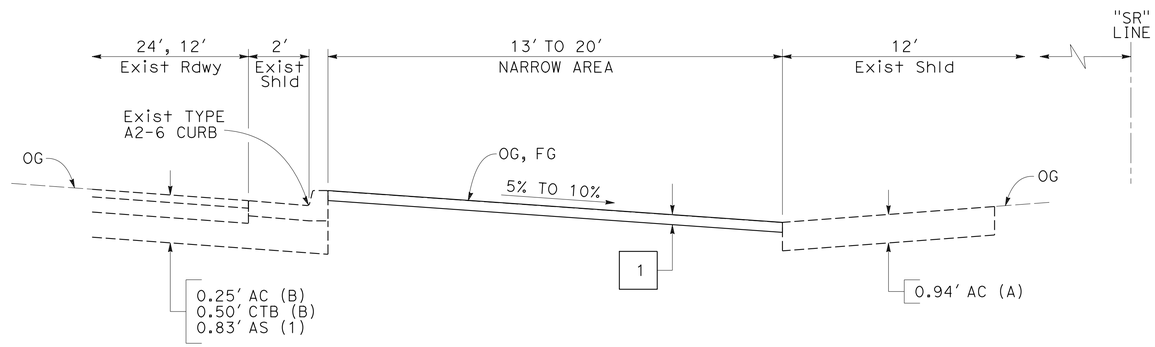

"SR" 115+18.52 TO 119+28

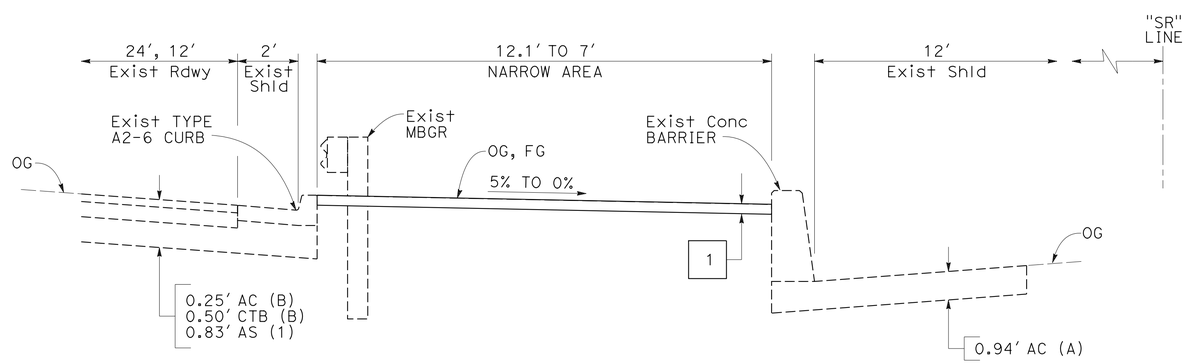

"SR" 107+92.03 TO 115+18.52
PAVE NARROW AREA
LOCATION 26

TYPICAL CROSS SECTIONS
NO SCALE

FOR NOTES, ABBREVIATIONS AND LEGEND, SEE SHEET X-1

X-7

REVISED BY	DATE REVISED
PA	5-25-16

PETER AGUILERA — VAN HEW — CALCULATED-DESIGNED BY / CHECKED BY

FUNCTIONAL SUPERVISOR: ARLISSA PANG

STATE OF CALIFORNIA - DEPARTMENT OF TRANSPORTATION
Caltrans®
DESIGN

LAST REVISION 05-24-16 | DATE PLOTTED => 11-AUG-2016 | TIME PLOTTED => 09:32

Dist	COUNTY	ROUTE	POST MILES TOTAL PROJECT	SHEET No.	TOTAL SHEETS
04	Son	12, 101	R16.0, 19.6	10	60

Peter Aguilera 5-25-16
REGISTERED CIVIL ENGINEER DATE

6-17-16
PLANS APPROVAL DATE

REGISTERED PROFESSIONAL ENGINEER Peter Aguilera No. 55287 Exp. 12-31-16 CIVIL STATE OF CALIFORNIA

THE STATE OF CALIFORNIA OR ITS OFFICERS OR AGENTS SHALL NOT BE RESPONSIBLE FOR THE ACCURACY OR COMPLETENESS OF SCANNED COPIES OF THIS PLAN SHEET.

NOTE:

FOR ACCURATE RIGHT OF WAY DATA, CONTACT RIGHT OF WAY ENGINEERING AT THE DISTRICT OFFICE.

NOTES:

1. FOR VEGETATION CONTROL AROUND EXISTING MBGR, SEE SHEET C-1.
2. COORDINATE VALUES SHOWN ARE IMPERIAL NAD83 ZONE 2.

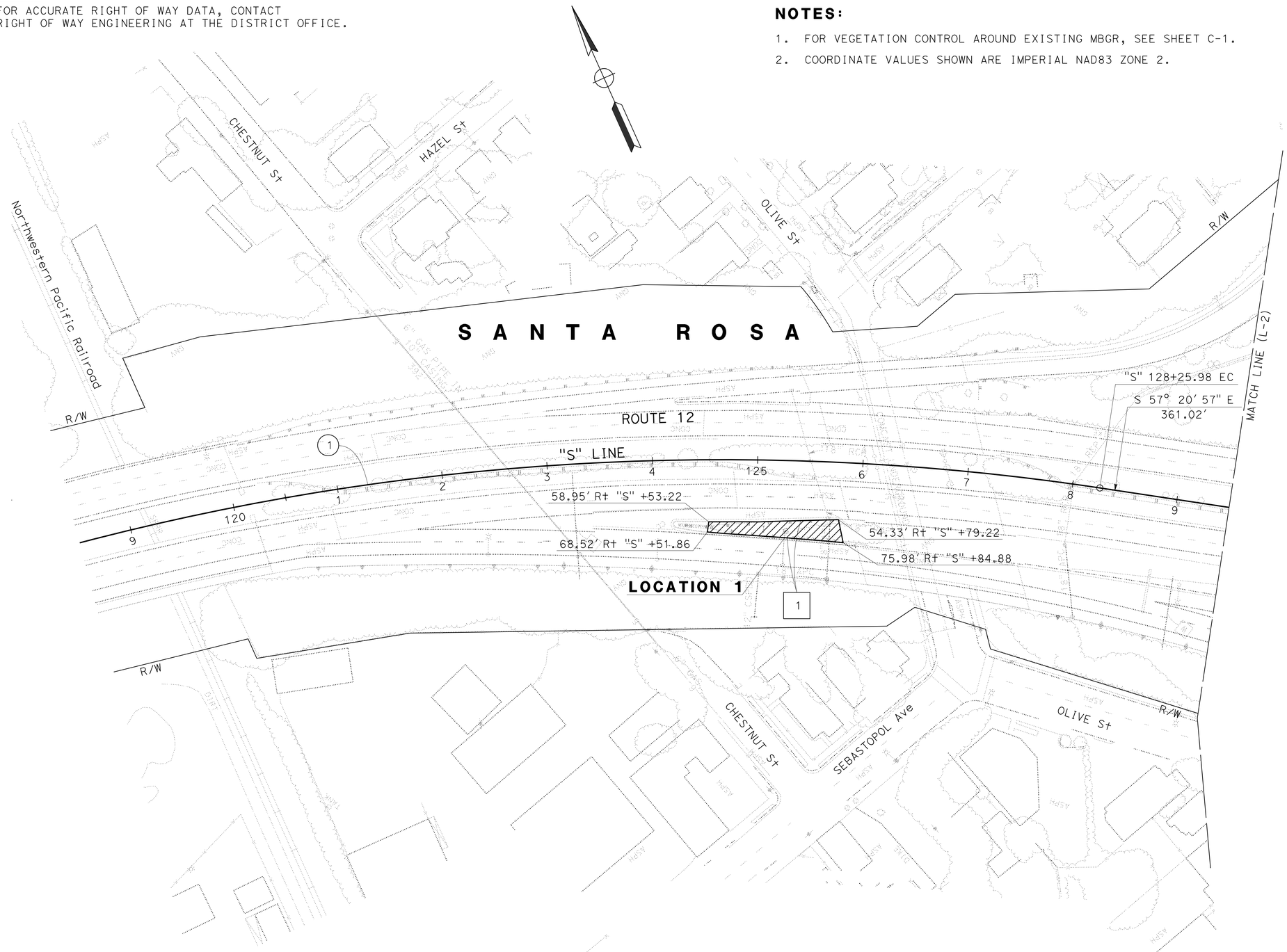

LEGEND:

- TEMPORARY REINFORCED SILT FENCE
- STRUCTURAL SECTION NUMBER
- CURVE DATA NUMBER
- ROADWAY EXCAVATION (TYPE Z-2) (AERIALLY DEPOSITED LEAD) TO BE EXCAVATED (0.35' DEEP).
- ROADWAY EXCAVATION (TYPE Z-2) (AERIALLY DEPOSITED LEAD) TO BE EXCAVATED (0.70' DEEP).

CURVE DATA

No. ⊕	R	Δ	T	L	N	E
1	2400.06'	42° 15' 17"	927.42'	1770.01'	1918077.24	6354585.12

LAYOUT
SCALE: 1" = 50'

L-1

STATE OF CALIFORNIA - DEPARTMENT OF TRANSPORTATION
Caltrans
DESIGN
FUNCTIONAL SUPERVISOR: ARLISSA PANG
CALCULATED-DESIGNED BY: PETER AGUILERA
CHECKED BY: VAN HEW
REVISED BY: PA
DATE REVISED: 5-25-16

LAST REVISION 05-24-16
DATE PLOTTED => 11-AUG-2016
TIME PLOTTED => 09:32

Dist	COUNTY	ROUTE	POST MILES TOTAL PROJECT	SHEET No.	TOTAL SHEETS
04	Son	12, 101	R16.0, 19.6	11	60

Peter Aguilera 5-25-16
REGISTERED CIVIL ENGINEER DATE

6-17-16
PLANS APPROVAL DATE

REGISTERED PROFESSIONAL ENGINEER Peter Aguilera No. 55287 Exp. 12-31-16 CIVIL STATE OF CALIFORNIA

THE STATE OF CALIFORNIA OR ITS OFFICERS OR AGENTS SHALL NOT BE RESPONSIBLE FOR THE ACCURACY OR COMPLETENESS OF SCANNED COPIES OF THIS PLAN SHEET.

NOTE:

FOR ACCURATE RIGHT OF WAY DATA, CONTACT RIGHT OF WAY ENGINEERING AT THE DISTRICT OFFICE.

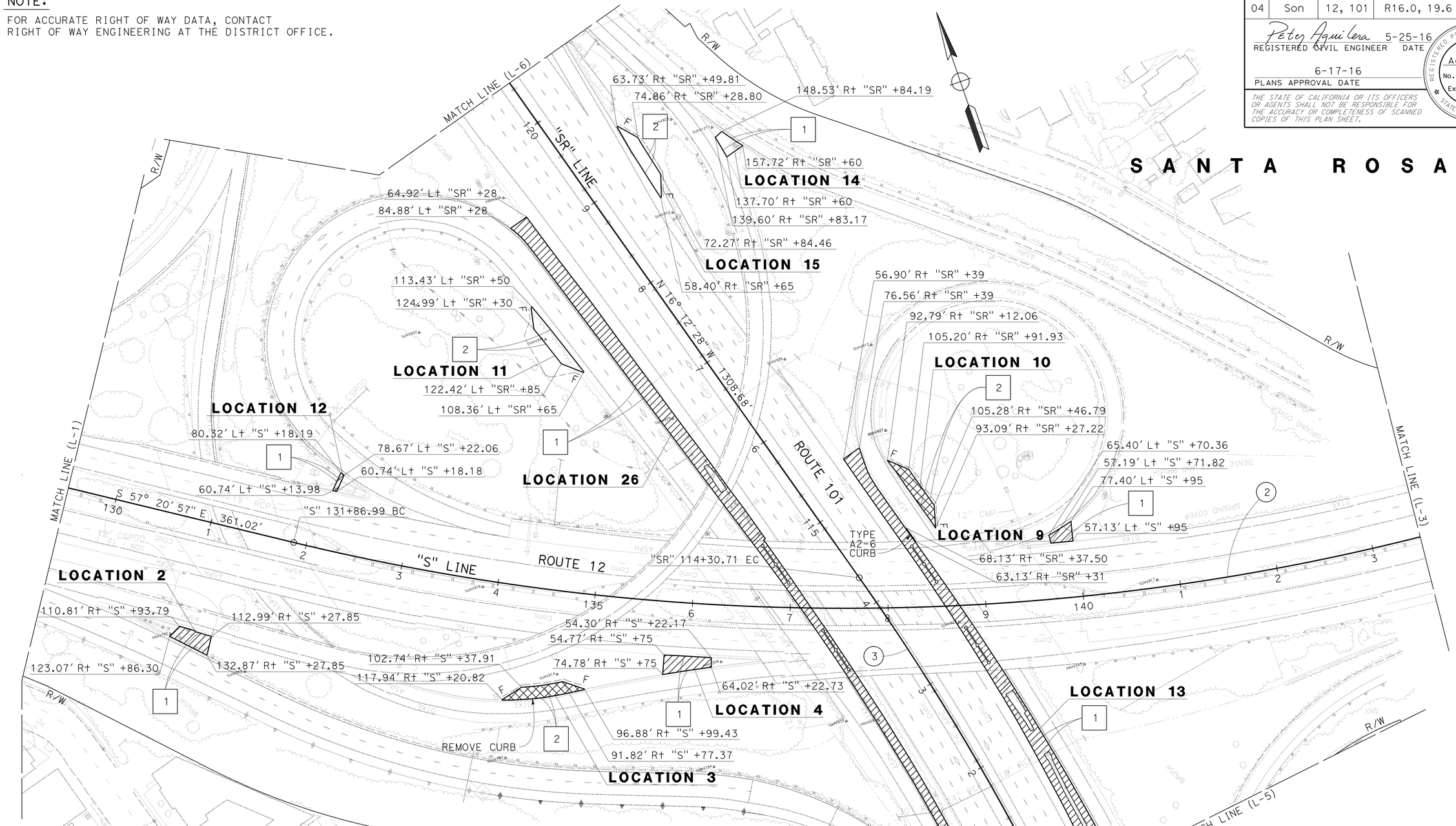

CURVE DATA

No. ⊕	R	Δ	T	L	N	E
2	2400.03'	52° 07' 59"	1174.02'	2183.77'	1921924.03	6357478.82
3	2500'	15° 32' 45"	341.26'	678.32'	1918982.70	6354318.06

FOR NOTES, ABBREVIATIONS AND LEGEND, SEE SHEET L-1

LAYOUT

SCALE: 1" = 50'

L-2

STATE OF CALIFORNIA - DEPARTMENT OF TRANSPORTATION
Caltrans
DESIGN

FUNCTIONAL SUPERVISOR: ARLISSA PANG
CALCULATED-DESIGNED BY: PETER AGUILERA
CHECKED BY: VAN HEW
REVISED BY: PA
DATE REVISED: 5-25-16

LAST REVISION 05-24-16
DATE PLOTTED => 11-AUG-2016
TIME PLOTTED => 09:32

Dist	COUNTY	ROUTE	POST MILES TOTAL PROJECT	SHEET No.	TOTAL SHEETS
04	Son	12, 101	R16.0, 19.6	12	60

Peter Aguilera 5-25-16
REGISTERED CIVIL ENGINEER DATE

6-17-16
PLANS APPROVAL DATE

REGISTERED PROFESSIONAL ENGINEER
Peter Aguilera
No. 55287
Exp. 12-31-16
CIVIL
STATE OF CALIFORNIA

THE STATE OF CALIFORNIA OR ITS OFFICERS OR AGENTS SHALL NOT BE RESPONSIBLE FOR THE ACCURACY OR COMPLETENESS OF SCANNED COPIES OF THIS PLAN SHEET.

NOTE:

FOR ACCURATE RIGHT OF WAY DATA, CONTACT RIGHT OF WAY ENGINEERING AT THE DISTRICT OFFICE.

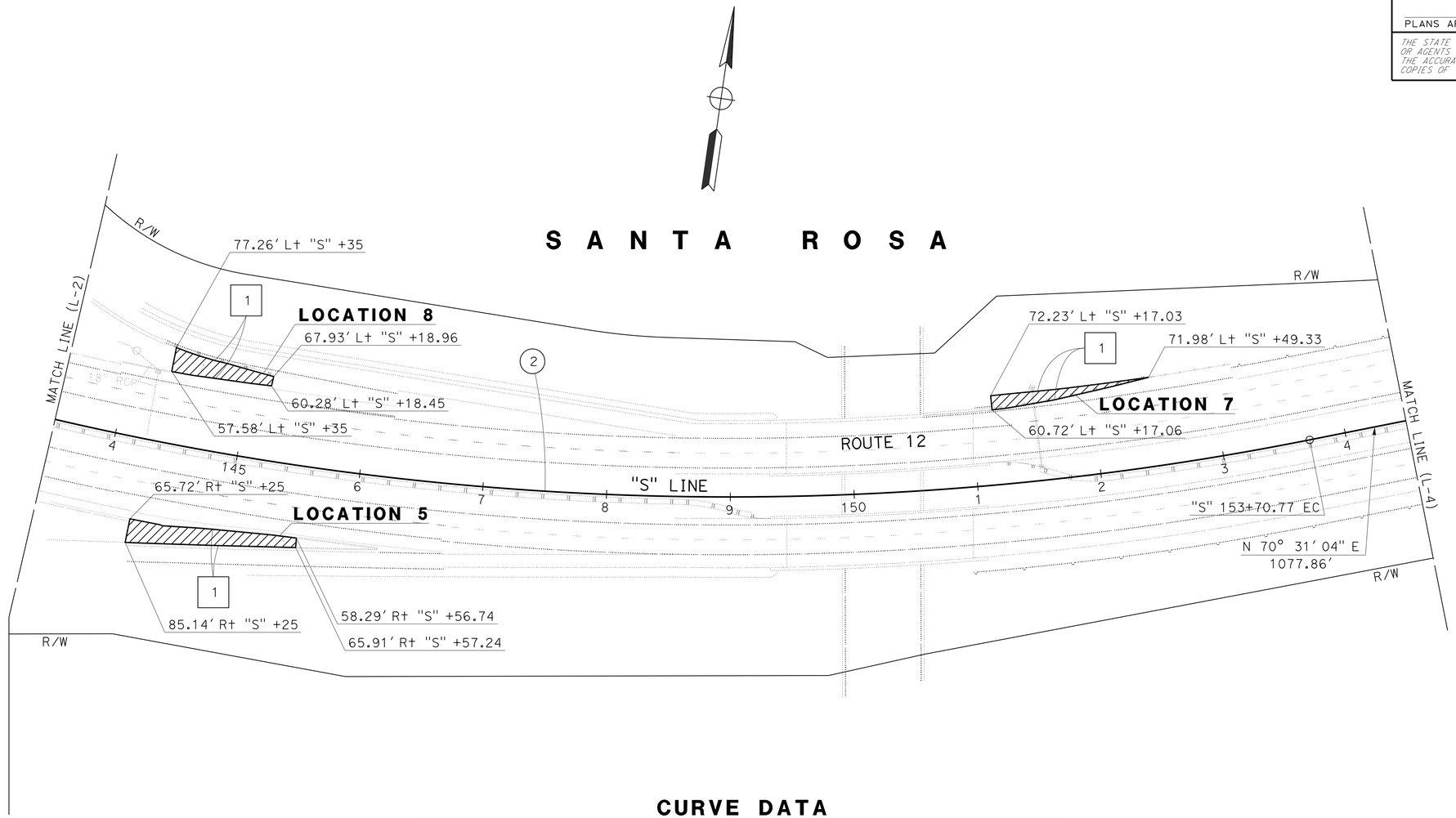

CURVE DATA

No. ⊕	R	Δ	T	L	N	E
2	2400.03'	52° 07' 59"	1174.02'	2183.77'	1921924.03	6357478.82

FOR NOTES, ABBREVIATIONS AND LEGEND, SEE SHEET L-1

LAYOUT

SCALE: 1" = 50'

L-3

REVISED BY	DATE REVISED
PA	5-25-16

PETER AGUILERA — CALCULATED-DESIGNED BY
VAN HEW — CHECKED BY
ARLISSA PANG — FUNCTIONAL SUPERVISOR

STATE OF CALIFORNIA - DEPARTMENT OF TRANSPORTATION
Caltrans
DESIGN

LAST REVISION 05-20-16
DATE PLOTTED => 11-AUG-2016
TIME PLOTTED => 09:32

Dist	COUNTY	ROUTE	POST MILES TOTAL PROJECT	SHEET No.	TOTAL SHEETS
04	Son	12, 101	R16.0, 19.6	13	60

Peter Aguilera 5-25-16
REGISTERED CIVIL ENGINEER DATE

6-17-16
PLANS APPROVAL DATE

REGISTERED PROFESSIONAL ENGINEER
Peter Aguilera
No. 55287
Exp. 12-31-16
CIVIL
STATE OF CALIFORNIA

THE STATE OF CALIFORNIA OR ITS OFFICERS OR AGENTS SHALL NOT BE RESPONSIBLE FOR THE ACCURACY OR COMPLETENESS OF SCANNED COPIES OF THIS PLAN SHEET.

NOTE:

FOR ACCURATE RIGHT OF WAY DATA, CONTACT RIGHT OF WAY ENGINEERING AT THE DISTRICT OFFICE.

S A N T A R O S A

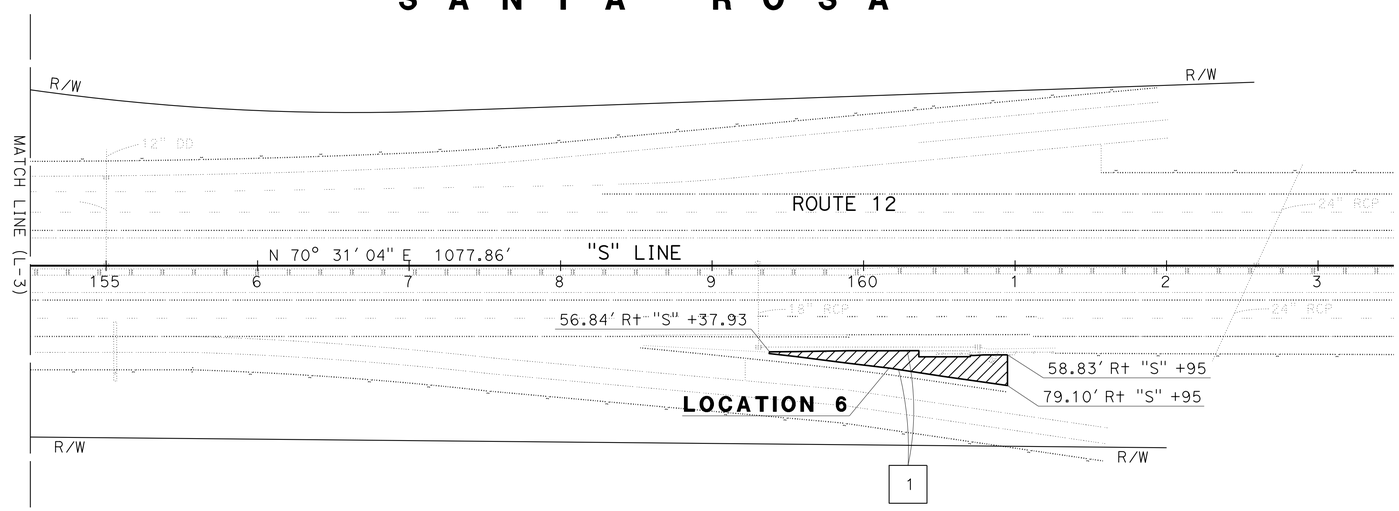

FOR NOTES, ABBREVIATIONS AND LEGEND, SEE SHEET L-1

LAYOUT

SCALE: 1" = 50'

L-4

REVISED BY	DATE REVISED
PA	5-25-16

PETER AGUILERA — VAN HEW — CALCULATED-DESIGNED BY / CHECKED BY

FUNCTIONAL SUPERVISOR: ARLISSA PANG

STATE OF CALIFORNIA - DEPARTMENT OF TRANSPORTATION

Caltrans® DESIGN

LAST REVISION 05-20-16 — DATE PLOTTED => 11-AUG-2016 — TIME PLOTTED => 09:32

Dist	COUNTY	ROUTE	POST MILES TOTAL PROJECT	SHEET No.	TOTAL SHEETS
04	Son	12, 101	R16.0, 19.6	14	60

Peter Aguilera 5-25-16
REGISTERED CIVIL ENGINEER DATE

6-17-16
PLANS APPROVAL DATE

REGISTERED PROFESSIONAL ENGINEER Peter Aguilera No. 55287 Exp. 12-31-16 CIVIL STATE OF CALIFORNIA

THE STATE OF CALIFORNIA OR ITS OFFICERS OR AGENTS SHALL NOT BE RESPONSIBLE FOR THE ACCURACY OR COMPLETENESS OF SCANNED COPIES OF THIS PLAN SHEET.

NOTE:

FOR ACCURATE RIGHT OF WAY DATA, CONTACT RIGHT OF WAY ENGINEERING AT THE DISTRICT OFFICE.

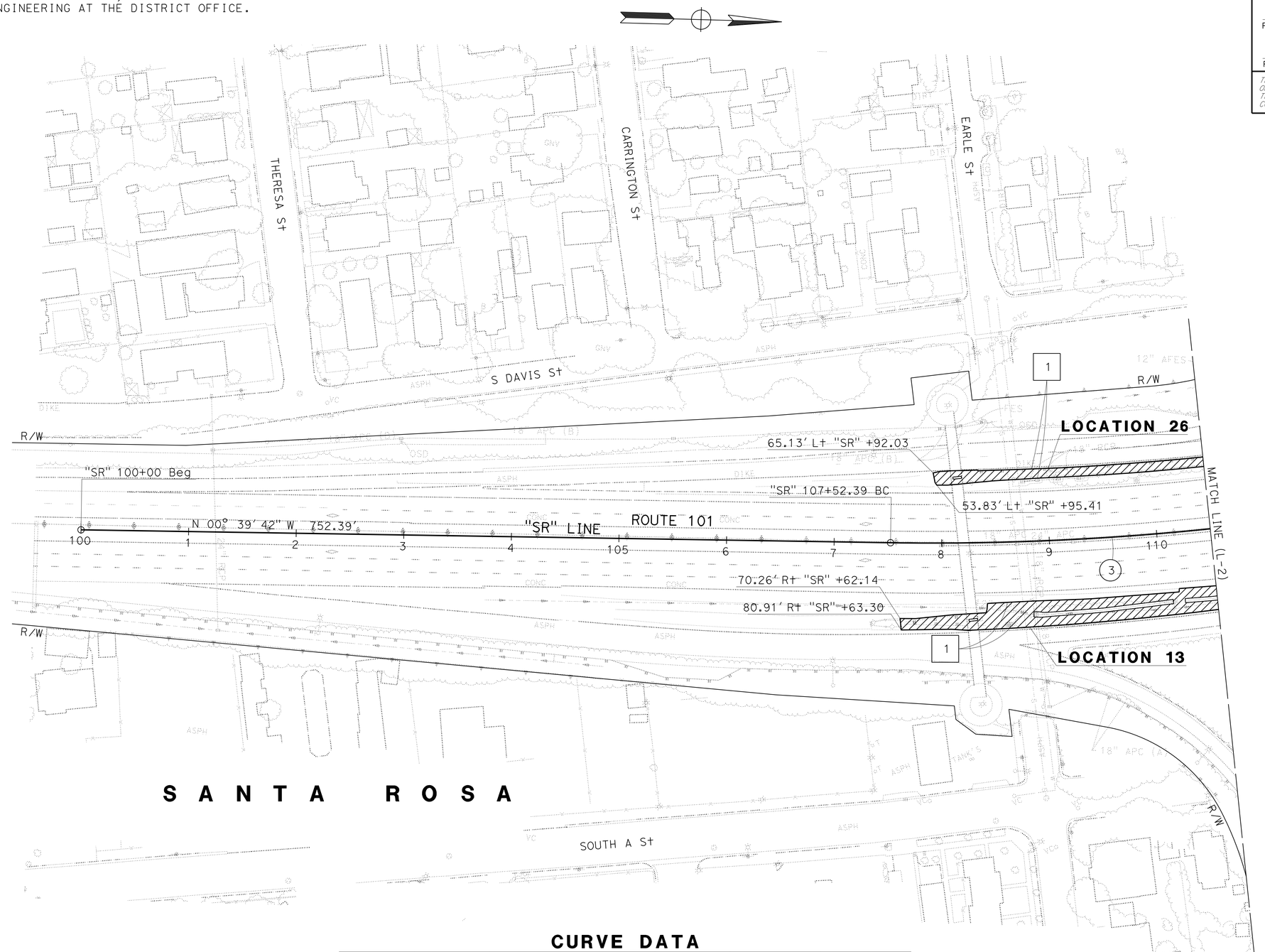

CURVE DATA

No. ⊕	R	Δ	T	L	N	E
3	2500'	15° 32' 45"	341.26'	678.32'	1918982.70	6354318.06

FOR NOTES, ABBREVIATIONS AND LEGEND, SEE SHEET L-1

LAYOUT

SCALE: 1" = 50'

L-5

STATE OF CALIFORNIA - DEPARTMENT OF TRANSPORTATION
Caltrans DESIGN

FUNCTIONAL SUPERVISOR: ARLISSA PANG
CALCULATED-DESIGNED BY: PETER AGUILERA
CHECKED BY: VAN HEW
REVISED BY: PA
DATE REVISED: 5-25-16

LAST REVISION 05-20-16 | DATE PLOTTED => 11-AUG-2016 | TIME PLOTTED => 09:32

Dist	COUNTY	ROUTE	POST MILES TOTAL PROJECT	SHEET No.	TOTAL SHEETS
04	Son	12, 101	R16.0, 19.6	15	60

Peter Aguilera 5-25-16
REGISTERED CIVIL ENGINEER DATE

6-17-16
PLANS APPROVAL DATE

REGISTERED PROFESSIONAL ENGINEER Peter Aguilera No. 55287 Exp. 12-31-16 CIVIL STATE OF CALIFORNIA

THE STATE OF CALIFORNIA OR ITS OFFICERS OR AGENTS SHALL NOT BE RESPONSIBLE FOR THE ACCURACY OR COMPLETENESS OF SCANNED COPIES OF THIS PLAN SHEET.

NOTE:

FOR ACCURATE RIGHT OF WAY DATA, CONTACT RIGHT OF WAY ENGINEERING AT THE DISTRICT OFFICE.

S A N T A R O S A

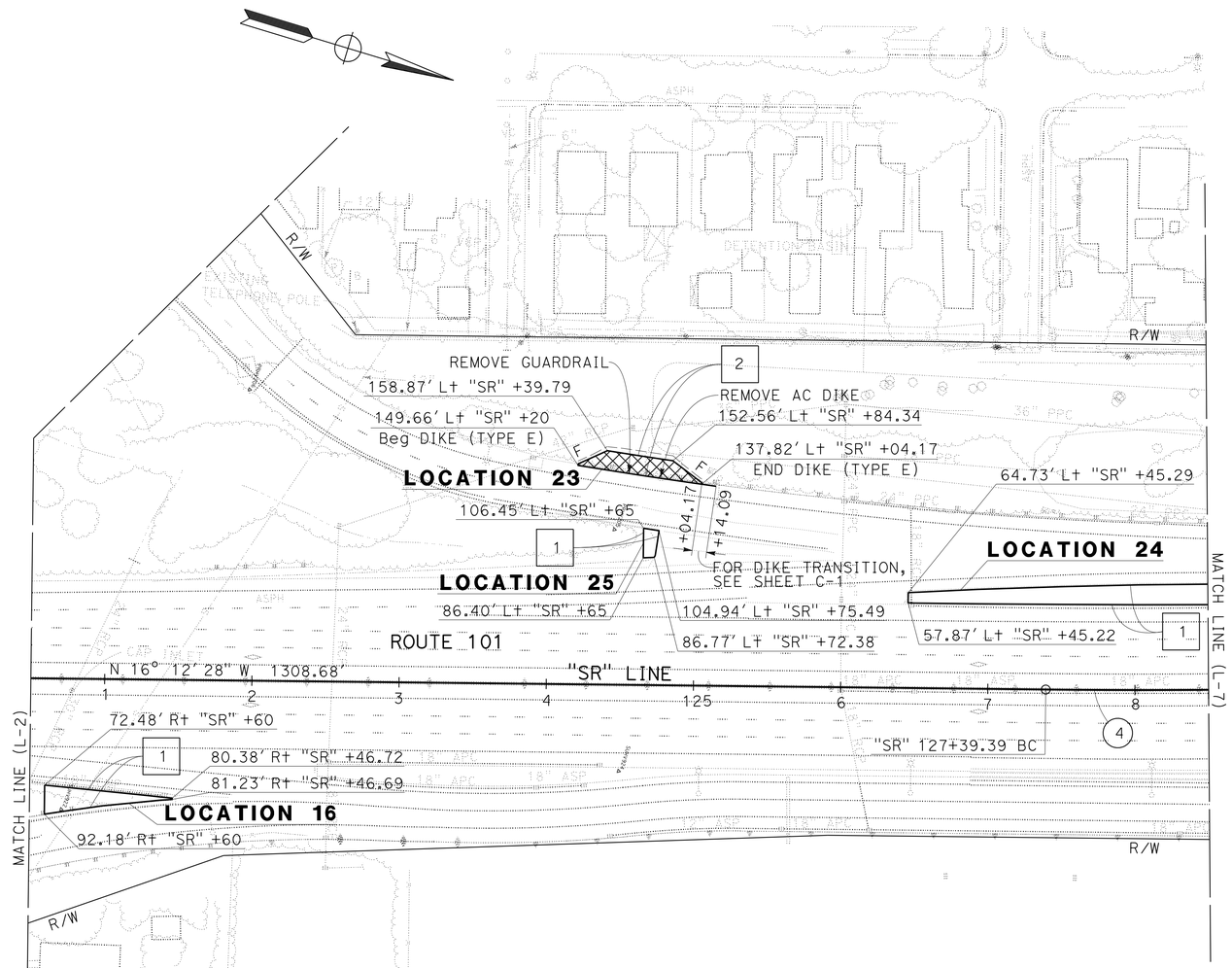

CURVE DATA

No. ⊕	R	Δ	T	L	N	E
4	6000'	11° 57' 01"	627.99'	1251.43'	1919262.45	6350591.88

FOR NOTES, ABBREVIATIONS AND LEGEND, SEE SHEET L-1

LAYOUT

SCALE: 1" = 50'

L-6

PA	REVISED BY
5-25-16	DATE REVISED
PETER AGUILERA	CALCULATED-DESIGNED BY
VAN HEW	CHECKED BY
ARLISSA PANG	FUNCTIONAL SUPERVISOR

STATE OF CALIFORNIA - DEPARTMENT OF TRANSPORTATION
Caltrans
DESIGN

LAST REVISION 05-24-16
DATE PLOTTED => 11-AUG-2016
TIME PLOTTED => 09:32

Dist	COUNTY	ROUTE	POST MILES TOTAL PROJECT	SHEET No.	TOTAL SHEETS
04	Son	12, 101	R16.0, 19.6	16	60

Peter Aguilera 5-25-16
REGISTERED CIVIL ENGINEER DATE

6-17-16
PLANS APPROVAL DATE

REGISTERED PROFESSIONAL ENGINEER Peter Aguilera No. 55287 Exp. 12-31-16 CIVIL STATE OF CALIFORNIA

THE STATE OF CALIFORNIA OR ITS OFFICERS OR AGENTS SHALL NOT BE RESPONSIBLE FOR THE ACCURACY OR COMPLETENESS OF SCANNED COPIES OF THIS PLAN SHEET.

NOTE:

FOR ACCURATE RIGHT OF WAY DATA, CONTACT RIGHT OF WAY ENGINEERING AT THE DISTRICT OFFICE.

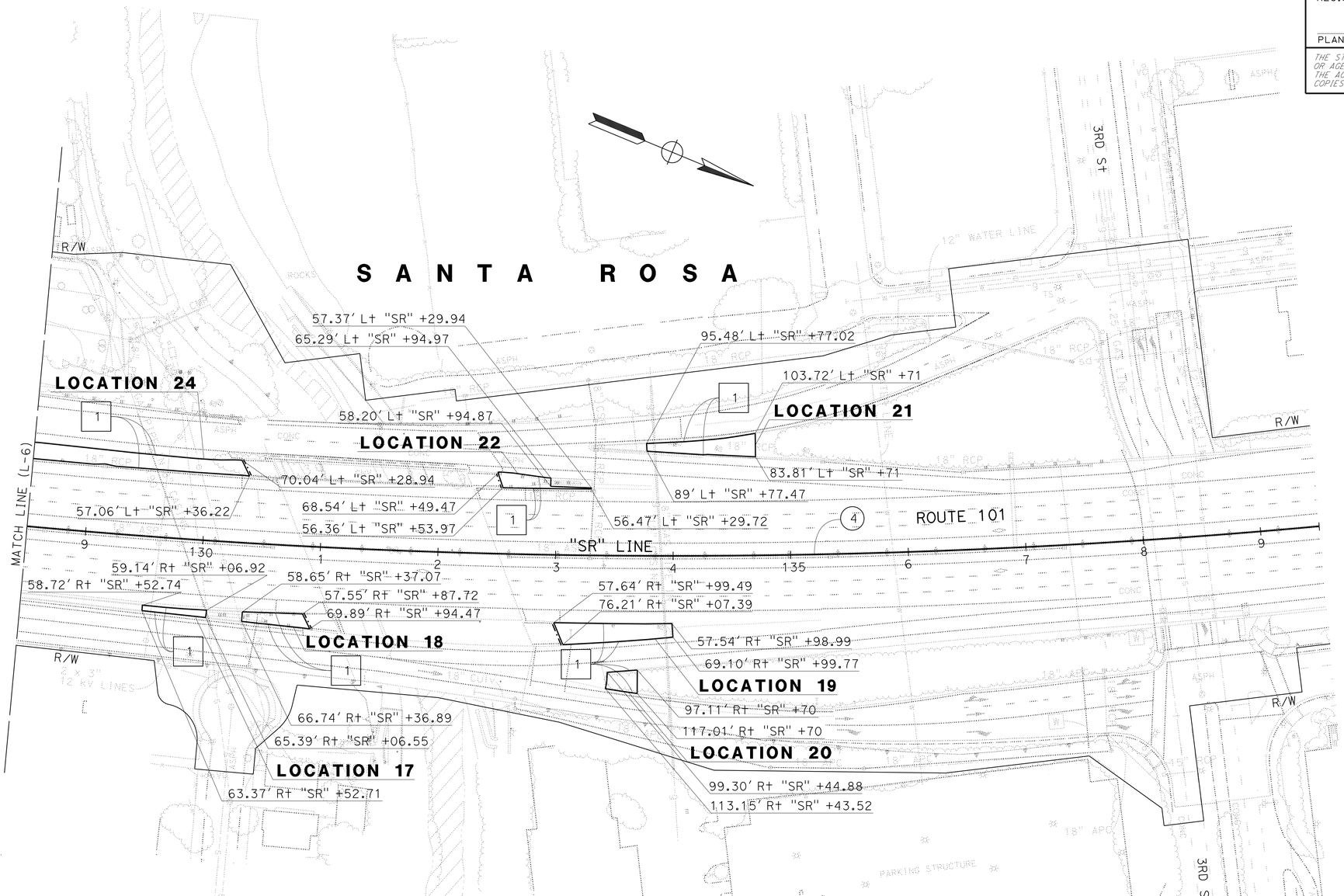

CURVE DATA

No. ⊕	R	Δ	T	L	N	E
4	6000'	11° 57' 01"	627.99'	1251.43'	1919262.45	6350591.88

FOR NOTES, ABBREVIATIONS AND LEGEND, SEE SHEET L-1

LAYOUT

SCALE: 1" = 50'

L-7

STATE OF CALIFORNIA - DEPARTMENT OF TRANSPORTATION
Caltrans
DESIGN

FUNCTIONAL SUPERVISOR: ARLISSA PANG
CALCULATED-DESIGNED BY: PETER AGUILERA
CHECKED BY: VAN HEW
REVISED BY: PA
DATE REVISED: 5-25-16

LAST REVISION 05-24-16
DATE PLOTTED => 11-AUG-2016
TIME PLOTTED => 09:32

Dist	COUNTY	ROUTE	POST MILES TOTAL PROJECT	SHEET No.	TOTAL SHEETS
04	Son	12, 101	R16.0, 19.6	17	60

Peter Aguilera 5-25-16
REGISTERED CIVIL ENGINEER DATE

6-17-16
PLANS APPROVAL DATE

REGISTERED PROFESSIONAL ENGINEER Peter Aguilera No. 55287 Exp. 12-31-16 CIVIL STATE OF CALIFORNIA

THE STATE OF CALIFORNIA OR ITS OFFICERS OR AGENTS SHALL NOT BE RESPONSIBLE FOR THE ACCURACY OR COMPLETENESS OF SCANNED COPIES OF THIS PLAN SHEET.

NOTES:

1. IF THE 8" BLOCK-OUT AT THE BACK OF POST CANNOT BE MAINTAINED, CONSTRUCT VEGETATION CONTROL FLUSH WITH THE BACK EDGE OF POST.
2. WHERE DIKE IS CONSTRUCTED UNDER RAILING, CONSTRUCT VEGETATION CONTROL TO BACK EDGE OF DIKE. WHERE PAVED SHOULDER IS CONSTRUCTED WITHIN 36" IN FRONT OF THE POST, CONSTRUCT VEGETATION CONTROL TO THE EDGE OF PAVED SHOULDER.
3. APPLY TACK COAT BEFORE PLACING HMA (TYPE A).

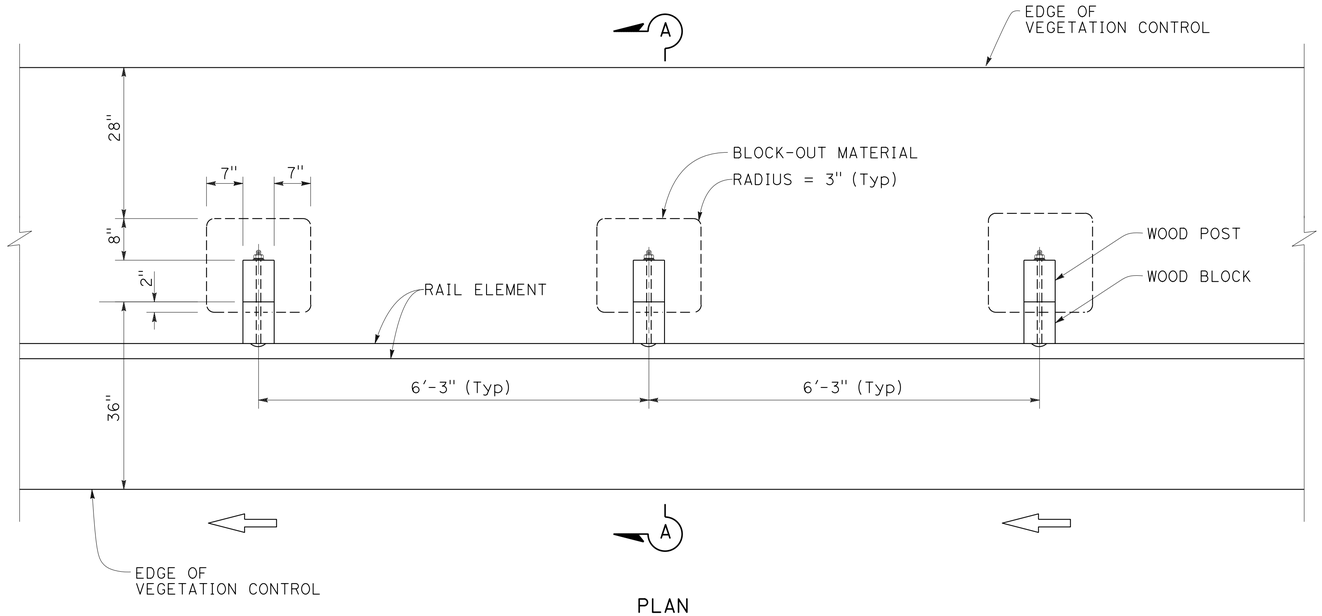

PLAN

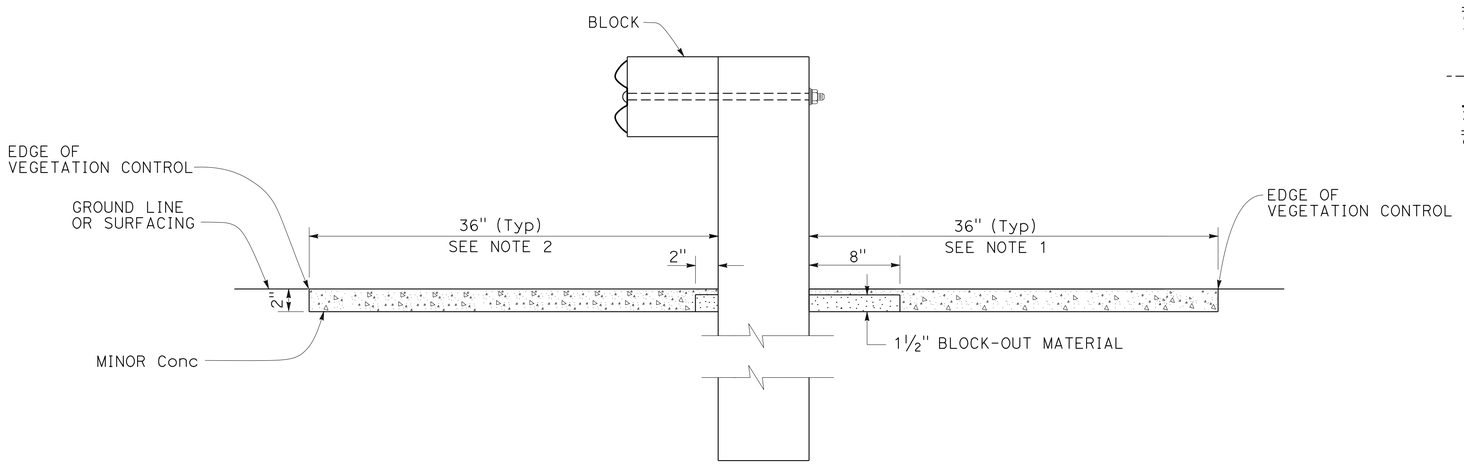

SECTION A-A

VEGETATION CONTROL
(EXISTING MBGR, STANDARD RAILING SECTION)

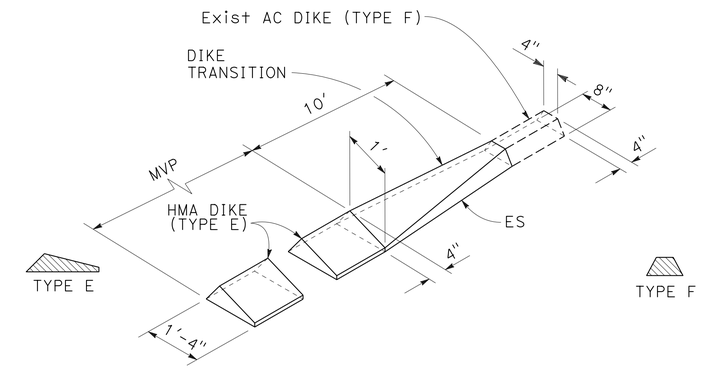

HMA DIKE (TYPE E) TO EXISTING AC DIKE (TYPE F)
LOCATION 23

HMA DIKE TRANSITION DETAIL

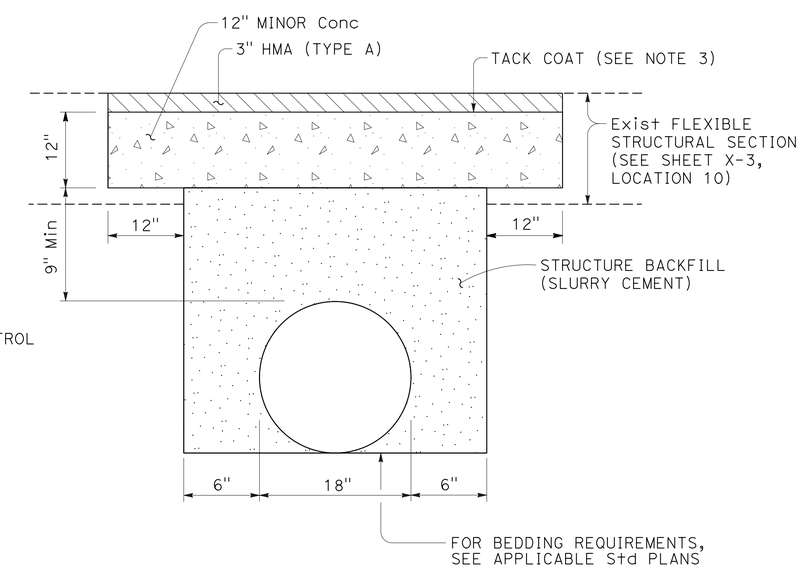

TRENCH PAVING DETAIL

DRAINAGE SYSTEM No. 1 c, e, g, i, k

CONSTRUCTION DETAILS
NO SCALE

C-1

STATE OF CALIFORNIA - DEPARTMENT OF TRANSPORTATION
Caltrans® **DESIGN**
FUNCTIONAL SUPERVISOR: ARLISSA PANG
CALCULATED-DESIGNED BY: PETER AGUILERA
CHECKED BY: VAN HEW
REVISED BY: PA
DATE REVISED: 5-25-16

LAST REVISION 05-20-16
DATE PLOTTED => 11-AUG-2016
TIME PLOTTED => 09:32

Dist	COUNTY	ROUTE	POST MILES TOTAL PROJECT	SHEET No.	TOTAL SHEETS
04	Son	12, 101	R16.0, 19.6	18	60

5-25-16
REGISTERED CIVIL ENGINEER DATE

6-17-16
PLANS APPROVAL DATE

REGISTERED PROFESSIONAL ENGINEER
Jiangfan Chen
No. 77248
Exp. 6-30-17
CIVIL
STATE OF CALIFORNIA

THE STATE OF CALIFORNIA OR ITS OFFICERS OR AGENTS SHALL NOT BE RESPONSIBLE FOR THE ACCURACY OR COMPLETENESS OF SCANNED COPIES OF THIS PLAN SHEET.

NOTE:

FOR ACCURATE RIGHT OF WAY DATA, CONTACT RIGHT OF WAY ENGINEERING AT THE DISTRICT OFFICE.

LEGEND:

TEMPORARY COVER

NOTE:

1. THE QUANTITY OF THE TEMPORARY COVER IS ESTIMATED BY USING ½ OF THE DSA AREA (THE HATCHED AREA).

TEMPORARY WATER POLLUTION CONTROL PLAN

SCALE: 1" = 50'

APPROVED FOR TEMPORARY WATER POLLUTION CONTROL WORK ONLY

WPC-1

REVISED BY	RE
DATE REVISED	5-24-16
CALCULATED-DESIGNED BY	RAJA EREIQAT
CHECKED BY	JENNIFER CHEN
FUNCTIONAL SUPERVISOR	KAMRAN NAKHJIRI

STATE OF CALIFORNIA - DEPARTMENT OF TRANSPORTATION
Caltrans® WATER QUALITY

LAST REVISION 05-24-16 | DATE PLOTTED => 11-AUG-2016 | TIME PLOTTED => 09:32

Dist	COUNTY	ROUTE	POST MILES TOTAL PROJECT	SHEET No.	TOTAL SHEETS
04	Son	12, 101	R16.0, 19.6	19	60

REGISTERED CIVIL ENGINEER 5-25-16 DATE

6-17-16
PLANS APPROVAL DATE

REGISTERED PROFESSIONAL ENGINEER
Jiangfan Chen
No. 77248
Exp. 6-30-17
CIVIL
STATE OF CALIFORNIA

THE STATE OF CALIFORNIA OR ITS OFFICERS OR AGENTS SHALL NOT BE RESPONSIBLE FOR THE ACCURACY OR COMPLETENESS OF SCANNED COPIES OF THIS PLAN SHEET.

NOTE:

FOR ACCURATE RIGHT OF WAY DATA, CONTACT RIGHT OF WAY ENGINEERING AT THE DISTRICT OFFICE.

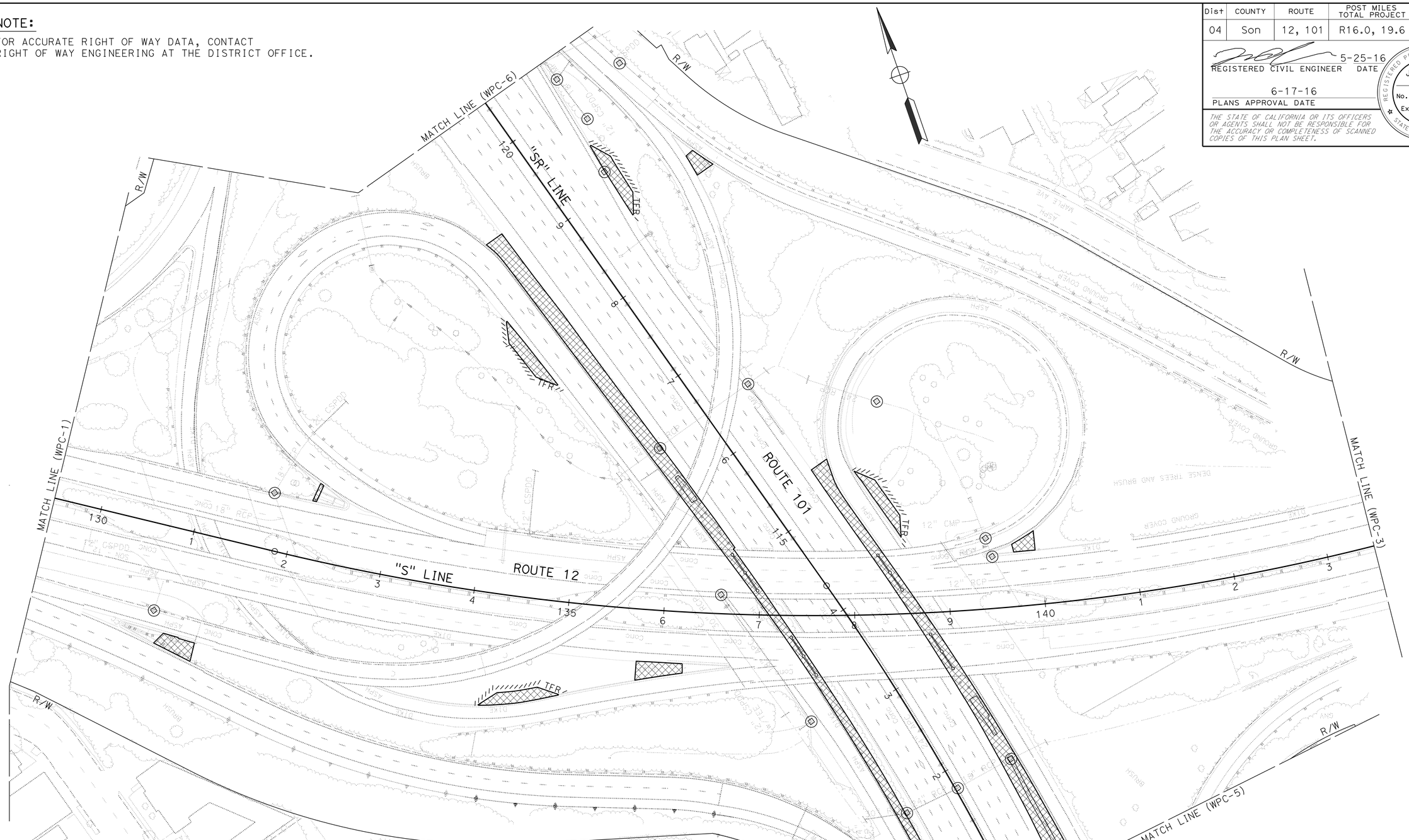

TEMPORARY WATER POLLUTION CONTROL PLAN

SCALE: 1" = 50'

FOR NOTES, ABBREVIATIONS AND LEGEND, SEE SHEET WPC-1

APPROVED FOR TEMPORARY WATER POLLUTION CONTROL WORK ONLY

WPC-2

STATE OF CALIFORNIA - DEPARTMENT OF TRANSPORTATION
Caltrans
WATER QUALITY

FUNCTIONAL SUPERVISOR: KAMRAN NAKHJIRI

CALCULATED-DESIGNED BY: RAJA EREIQAT
CHECKED BY: JENNIFER CHEN

REVISED BY: RE
DATE REVISED: 5-24-16

LAST REVISION 05-24-16 | DATE PLOTTED => 11-AUG-2016 | TIME PLOTTED => 09:32

Dist	COUNTY	ROUTE	POST MILES TOTAL PROJECT	SHEET No.	TOTAL SHEETS
04	Son	12, 101	R16.0, 19.6	20	60

REGISTERED CIVIL ENGINEER 5-25-16 DATE

6-17-16
PLANS APPROVAL DATE

REGISTERED PROFESSIONAL ENGINEER Jiangfan Chen No. 77248 Exp. 6-30-17 CIVIL STATE OF CALIFORNIA

THE STATE OF CALIFORNIA OR ITS OFFICERS OR AGENTS SHALL NOT BE RESPONSIBLE FOR THE ACCURACY OR COMPLETENESS OF SCANNED COPIES OF THIS PLAN SHEET.

NOTE:

FOR ACCURATE RIGHT OF WAY DATA, CONTACT RIGHT OF WAY ENGINEERING AT THE DISTRICT OFFICE.

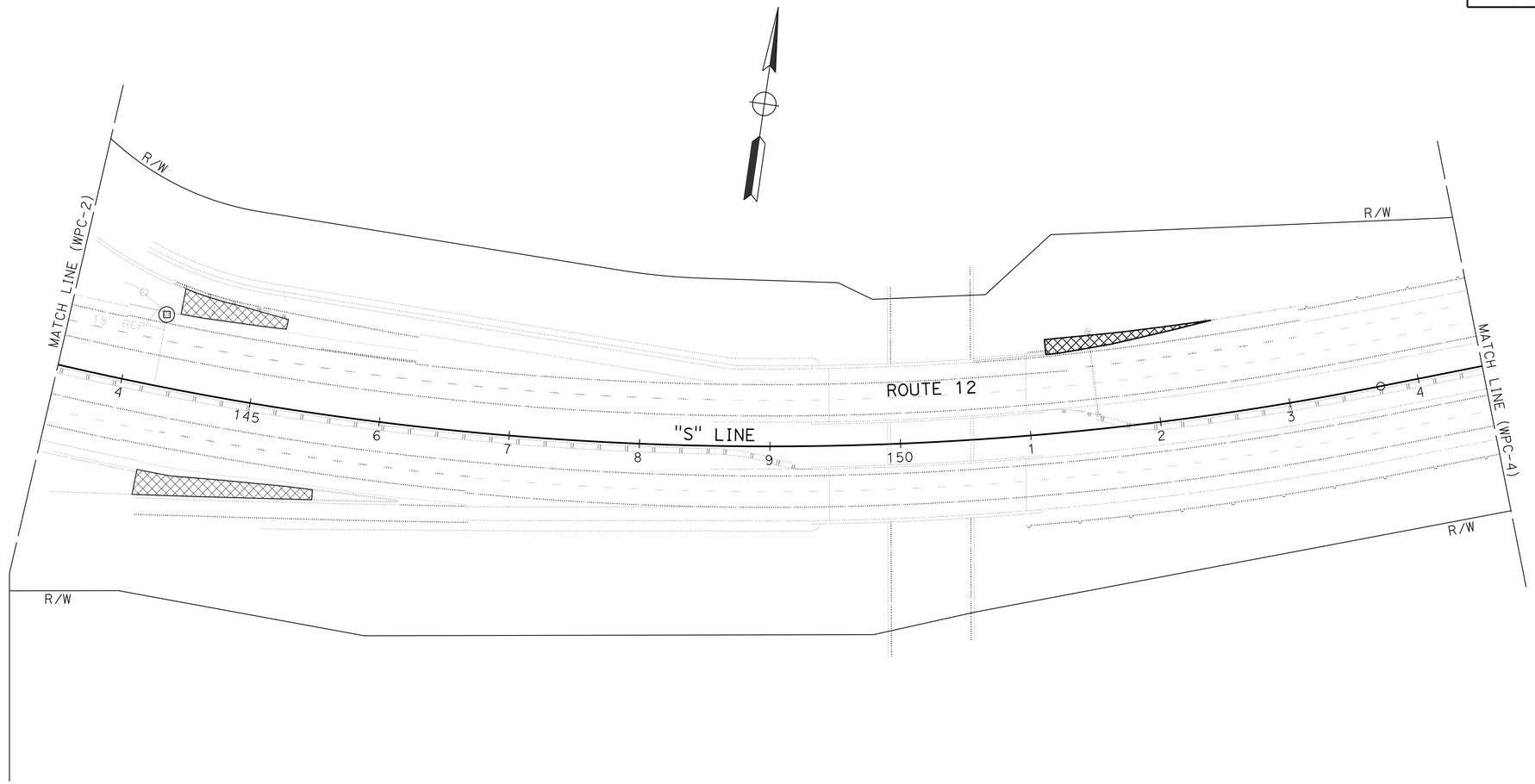

TEMPORARY WATER POLLUTION CONTROL PLAN

SCALE: 1" = 50'

FOR NOTES, ABBREVIATIONS AND LEGEND, SEE SHEET WPC-1

APPROVED FOR TEMPORARY WATER POLLUTION CONTROL WORK ONLY

WPC-3

REVISED BY	DATE REVISED
RE	5-24-16

CALCULATED-DESIGNED BY: RAJA EREIQAT
CHECKED BY: JENNIFER CHEN
FUNCTIONAL SUPERVISOR: KAMRAN NAKHJIRI

STATE OF CALIFORNIA - DEPARTMENT OF TRANSPORTATION
Caltrans
WATER QUALITY

LAST REVISION 05-24-16
DATE PLOTTED => 11-AUG-2016
TIME PLOTTED => 09:33

Dist	COUNTY	ROUTE	POST MILES TOTAL PROJECT	SHEET No.	TOTAL SHEETS
04	Son	12, 101	R16.0, 19.6	21	60

5-25-16
REGISTERED CIVIL ENGINEER DATE

6-17-16
PLANS APPROVAL DATE

REGISTERED PROFESSIONAL ENGINEER
Jiangfan Chen
No. 77248
Exp. 6-30-17
CIVIL
STATE OF CALIFORNIA

THE STATE OF CALIFORNIA OR ITS OFFICERS OR AGENTS SHALL NOT BE RESPONSIBLE FOR THE ACCURACY OR COMPLETENESS OF SCANNED COPIES OF THIS PLAN SHEET.

NOTE:

FOR ACCURATE RIGHT OF WAY DATA, CONTACT
RIGHT OF WAY ENGINEERING AT THE DISTRICT OFFICE.

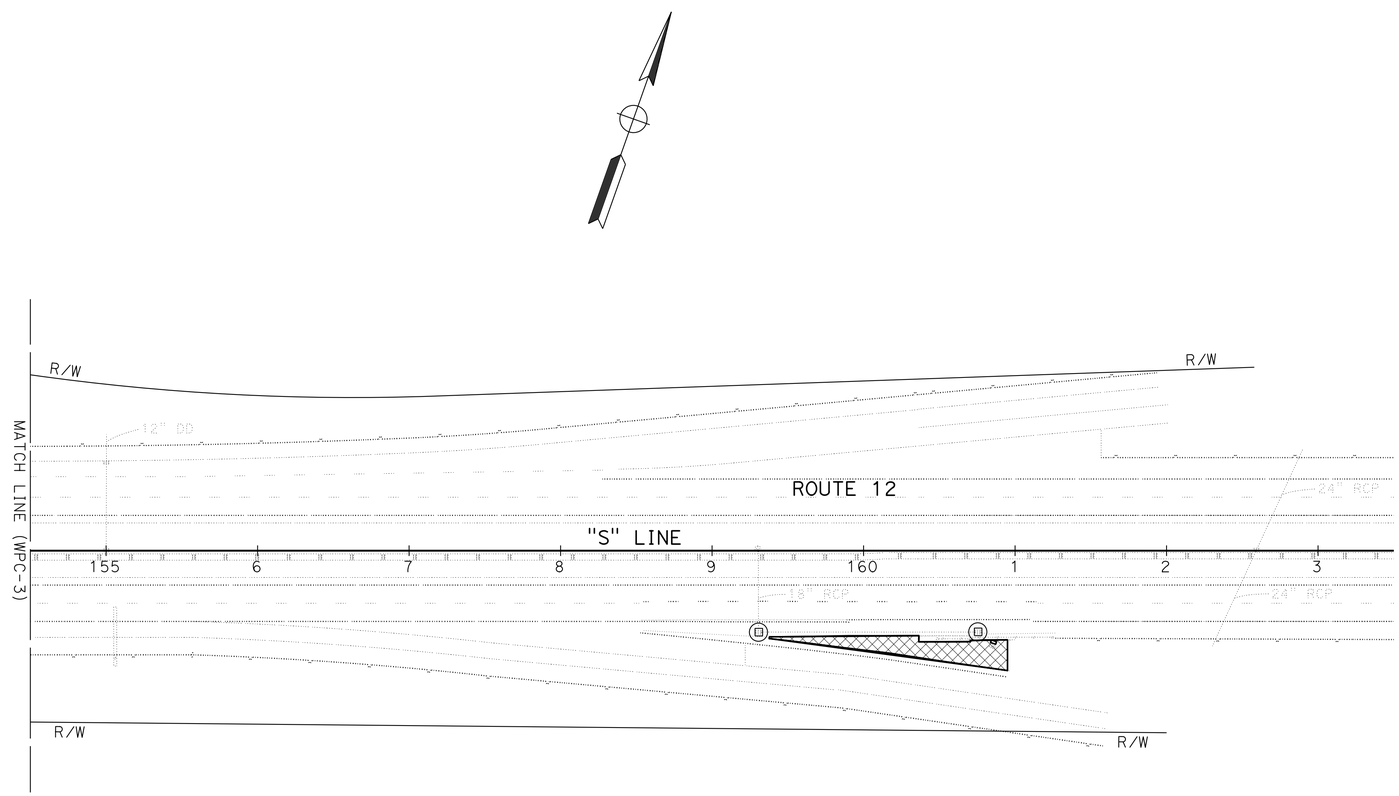

APPROVED FOR TEMPORARY WATER POLLUTION CONTROL WORK ONLY

FOR NOTES, ABBREVIATIONS AND LEGEND, SEE SHEET WPC-1

TEMPORARY WATER POLLUTION CONTROL PLAN

SCALE: 1" = 50'

WPC-4

REVISED BY	DATE REVISED
RE	5-24-16

CALCULATED-DESIGNED BY: RAJA EREIQAT
CHECKED BY: JENNIFER CHEN
FUNCTIONAL SUPERVISOR: KAMRAN NAKHJIRI

STATE OF CALIFORNIA - DEPARTMENT OF TRANSPORTATION
Caltrans
WATER QUALITY

LAST REVISION 05-24-16
DATE PLOTTED => 11-AUG-2016
TIME PLOTTED => 09:33

Dist	COUNTY	ROUTE	POST MILES TOTAL PROJECT	SHEET No.	TOTAL SHEETS
04	Son	12, 101	R16.0, 19.6	22	60

5-25-16
REGISTERED CIVIL ENGINEER DATE

6-17-16
PLANS APPROVAL DATE

REGISTERED PROFESSIONAL ENGINEER
Jiangfan Chen
No. 77248
Exp. 6-30-17
CIVIL
STATE OF CALIFORNIA

THE STATE OF CALIFORNIA OR ITS OFFICERS OR AGENTS SHALL NOT BE RESPONSIBLE FOR THE ACCURACY OR COMPLETENESS OF SCANNED COPIES OF THIS PLAN SHEET.

NOTE:

FOR ACCURATE RIGHT OF WAY DATA, CONTACT RIGHT OF WAY ENGINEERING AT THE DISTRICT OFFICE.

TEMPORARY WATER POLLUTION CONTROL PLAN

SCALE: 1" = 50'

FOR NOTES, ABBREVIATIONS AND LEGEND, SEE SHEET WPC-1

APPROVED FOR TEMPORARY WATER POLLUTION CONTROL WORK ONLY

WPC-5

REVISED BY	RE
DATE REVISED	5-24-16
RAJA EREIQAT	
JENNIFER CHEN	
CALCULATED-DESIGNED BY	
CHECKED BY	
FUNCTIONAL SUPERVISOR	
KAMRAN NAKHJIRI	

STATE OF CALIFORNIA - DEPARTMENT OF TRANSPORTATION
Caltrans
WATER QUALITY

LAST REVISION 05-24-16
DATE PLOTTED => 11-AUG-2016
TIME PLOTTED => 09:33

Dist	COUNTY	ROUTE	POST MILES TOTAL PROJECT	SHEET No.	TOTAL SHEETS
04	Son	12, 101	R16.0, 19.6	23	60

REGISTERED CIVIL ENGINEER 5-25-16 DATE

6-17-16
PLANS APPROVAL DATE

REGISTERED PROFESSIONAL ENGINEER
Jiangfan Chen
No. 77248
Exp. 6-30-17
CIVIL
STATE OF CALIFORNIA

THE STATE OF CALIFORNIA OR ITS OFFICERS OR AGENTS SHALL NOT BE RESPONSIBLE FOR THE ACCURACY OR COMPLETENESS OF SCANNED COPIES OF THIS PLAN SHEET.

NOTE:

FOR ACCURATE RIGHT OF WAY DATA, CONTACT
RIGHT OF WAY ENGINEERING AT THE DISTRICT OFFICE.

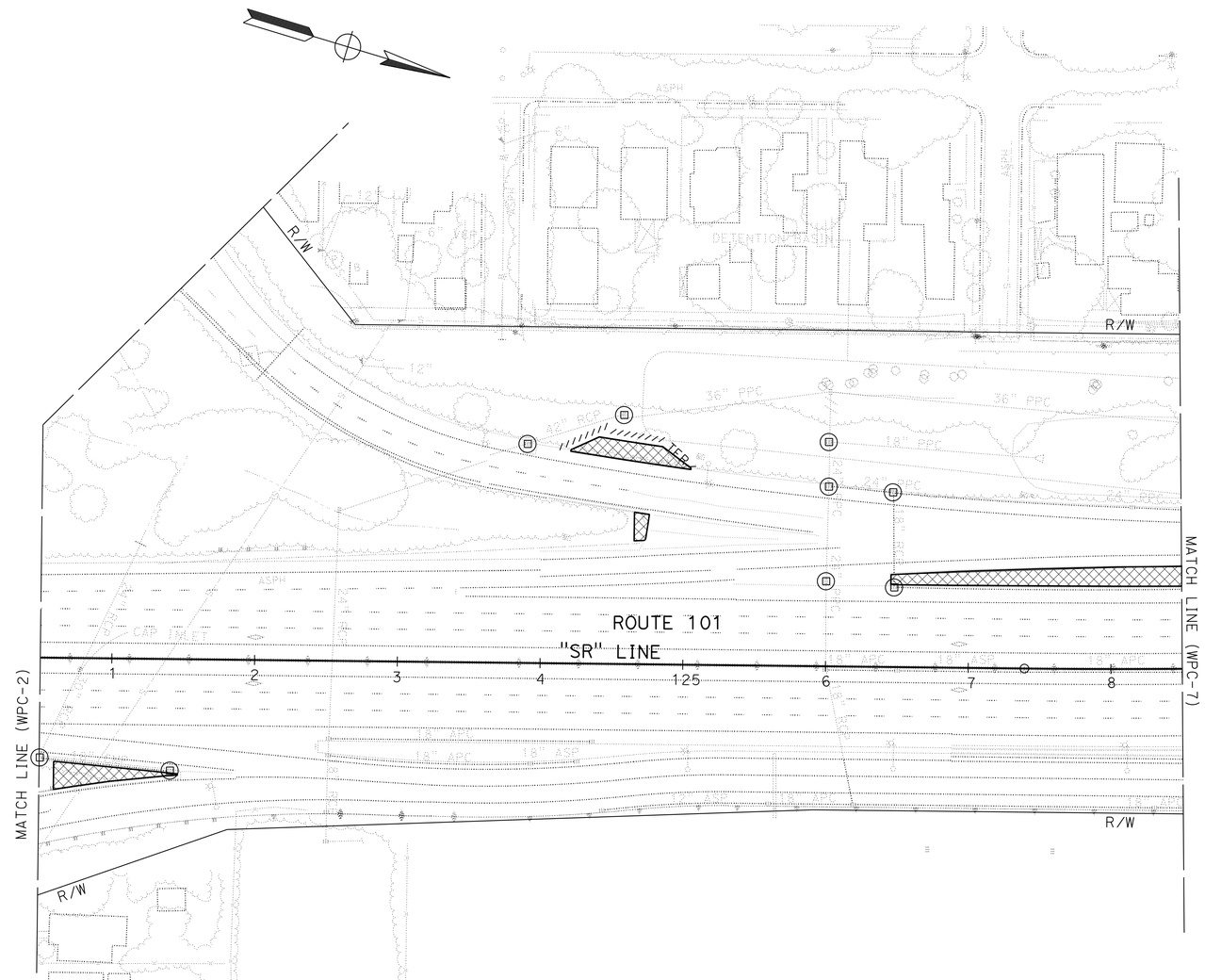

TEMPORARY WATER POLLUTION CONTROL PLAN

SCALE: 1" = 50'

FOR NOTES, ABBREVIATIONS AND LEGEND, SEE SHEET WPC-1

APPROVED FOR TEMPORARY WATER POLLUTION CONTROL WORK ONLY

WPC-6

REVISED BY	RE
DATE REVISED	5-24-16
CALCULATED-DESIGNED BY	RAJA EREIQAT
CHECKED BY	JENNIFER CHEN
FUNCTIONAL SUPERVISOR	KAMRAN NAKHJIRI

STATE OF CALIFORNIA - DEPARTMENT OF TRANSPORTATION
Caltrans®
WATER QUALITY

LAST REVISION 05-24-16 | DATE PLOTTED => 11-AUG-2016 | TIME PLOTTED => 09:33

Dist	COUNTY	ROUTE	POST MILES TOTAL PROJECT	SHEET No.	TOTAL SHEETS
04	Son	12, 101	R16.0, 19.6	24	60

REGISTERED CIVIL ENGINEER 5-25-16 DATE

6-17-16
PLANS APPROVAL DATE

REGISTERED PROFESSIONAL ENGINEER
Jiangfan Chen
No. 77248
Exp. 6-30-17
CIVIL
STATE OF CALIFORNIA

THE STATE OF CALIFORNIA OR ITS OFFICERS OR AGENTS SHALL NOT BE RESPONSIBLE FOR THE ACCURACY OR COMPLETENESS OF SCANNED COPIES OF THIS PLAN SHEET.

NOTE:

FOR ACCURATE RIGHT OF WAY DATA, CONTACT RIGHT OF WAY ENGINEERING AT THE DISTRICT OFFICE.

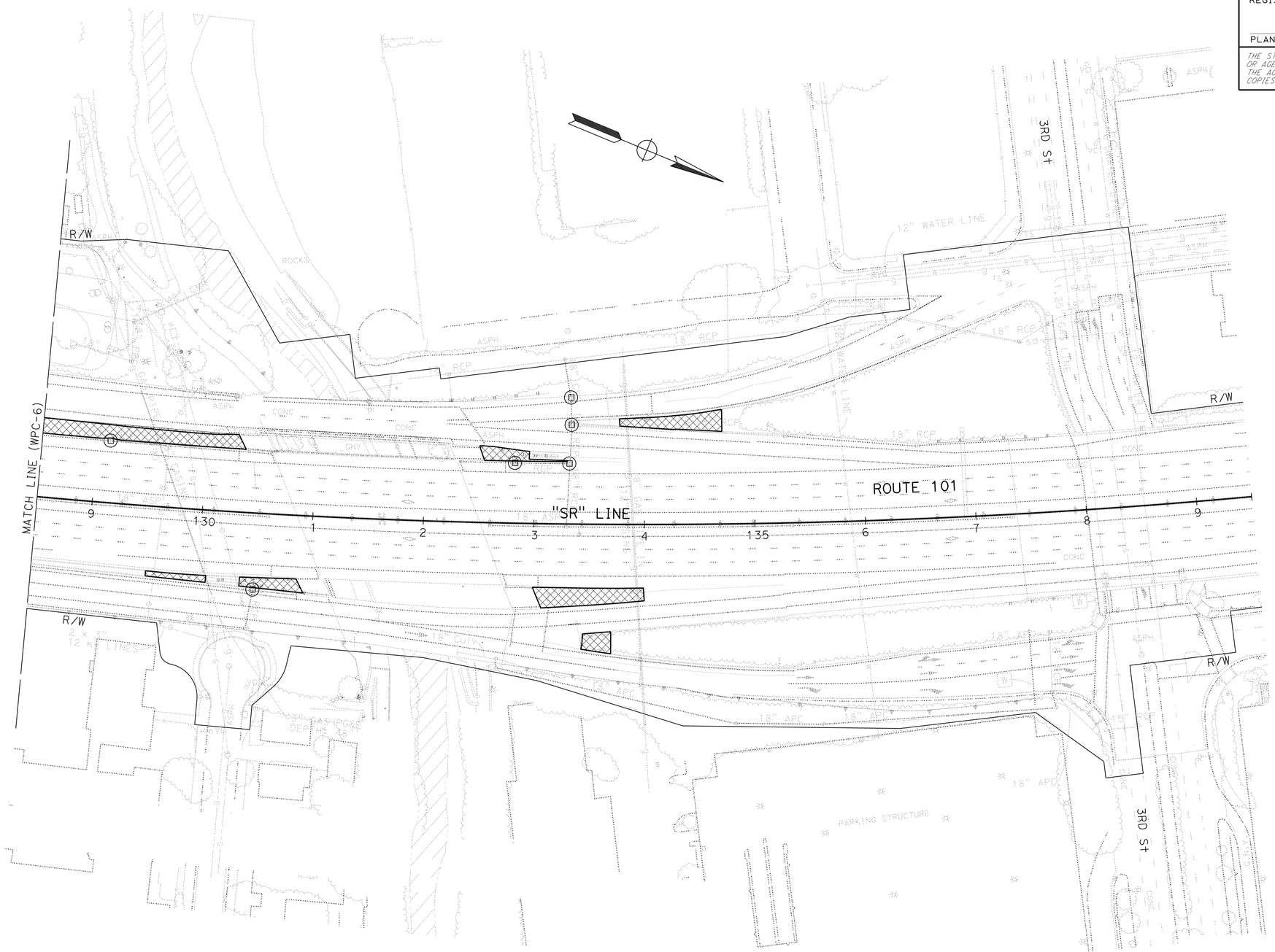

TEMPORARY WATER POLLUTION CONTROL PLAN

SCALE: 1" = 50'

FOR NOTES, ABBREVIATIONS AND LEGEND, SEE SHEET WPC-1

APPROVED FOR TEMPORARY WATER POLLUTION CONTROL WORK ONLY

WPC-7

REVISED BY	RE
DATE REVISED	5-24-16
CALCULATED-DESIGNED BY	RAJA EREIQAT
CHECKED BY	JENNIFER CHEN
FUNCTIONAL SUPERVISOR	KAMRAN NAKHJIRI

STATE OF CALIFORNIA - DEPARTMENT OF TRANSPORTATION
Caltrans
WATER QUALITY

LAST REVISION 05-24-16
DATE PLOTTED => 11-AUG-2016
TIME PLOTTED => 09:33

Dist	COUNTY	ROUTE	POST MILES TOTAL PROJECT	SHEET No.	TOTAL SHEETS
04	Son	12, 101	R16.0, 19.6	25	60

REGISTERED CIVIL ENGINEER DATE 5-25-16

6-17-16
PLANS APPROVAL DATE

REGISTERED PROFESSIONAL ENGINEER
Jiangfan Chen
No. 77248
Exp. 6-30-17
CIVIL
STATE OF CALIFORNIA

THE STATE OF CALIFORNIA OR ITS OFFICERS OR AGENTS SHALL NOT BE RESPONSIBLE FOR THE ACCURACY OR COMPLETENESS OF SCANNED COPIES OF THIS PLAN SHEET.

TEMPORARY WATER POLLUTION CONTROL QUANTITIES

LOCATION	ROUTE	PM	DIRECTION	TEMPORARY FIBER ROLL	TEMPORARY DRAINAGE INLET PROTECTION	TEMPORARY COVER
				LF	EA	SQYD
1	12	15.69	EB		4	113
2		15.91			1	35
3		15.92		110		45
4		16.00				41
5		16.16				98
6		16.46			2	92
7		16.30	WB			47
8		16.16			1	62
9		16.08			2	15
10		16.06		110	2	42
11		15.98		110		48
12		15.93			1	5
13	101	15.59	NB		2	413
14		19.74				20
15		19.75		110	4	48
16		19.77			3	47
17		19.95			1	17
18		19.96				32
19		20.02				83
20		20.03				26
21		20.04	SB		2	63
22		20.01			2	30
23		19.95		110	4	48
24		19.92			4	134
25		19.84				11
26		19.63			4	575
TOTAL				550	39	2190

NOTE: THE QUANTITY OF THE TEMPORARY COVER IS ESTIMATED BY USING ½ OF THE DSA AREA (THE HATCHED AREA)

TEMPORARY WATER POLLUTION CONTROL QUANTITIES

WPCQ-1

STATE OF CALIFORNIA - DEPARTMENT OF TRANSPORTATION
Caltrans
WATER QUALITY

FUNCTIONAL SUPERVISOR: KAMRAN NAKHJIRI
CALCULATED-DESIGNED BY: JENNIFER CHEN
CHECKED BY: RAJA EREIQAT
REVISED BY: RE
DATE REVISED: 5-24-16

LAST REVISION 05-24-16
DATE PLOTTED => 11-AUG-2016
TIME PLOTTED => 09:33

Dist	COUNTY	ROUTE	POST MILES TOTAL PROJECT	SHEET No.	TOTAL SHEETS
04	Son	12, 101	R16.0, 19.6	26	60

REGISTERED CIVIL ENGINEER DATE 5-25-16

PLANS APPROVAL DATE 6-17-16

REGISTERED PROFESSIONAL ENGINEER Khai Shoon Leong No. 76183 Exp. 6-30-16 CIVIL STATE OF CALIFORNIA

THE STATE OF CALIFORNIA OR ITS OFFICERS OR AGENTS SHALL NOT BE RESPONSIBLE FOR THE ACCURACY OR COMPLETENESS OF SCANNED COPIES OF THIS PLAN SHEET.

NOTE:

FOR ACCURATE RIGHT OF WAY DATA, CONTACT RIGHT OF WAY ENGINEERING AT THE DISTRICT OFFICE.

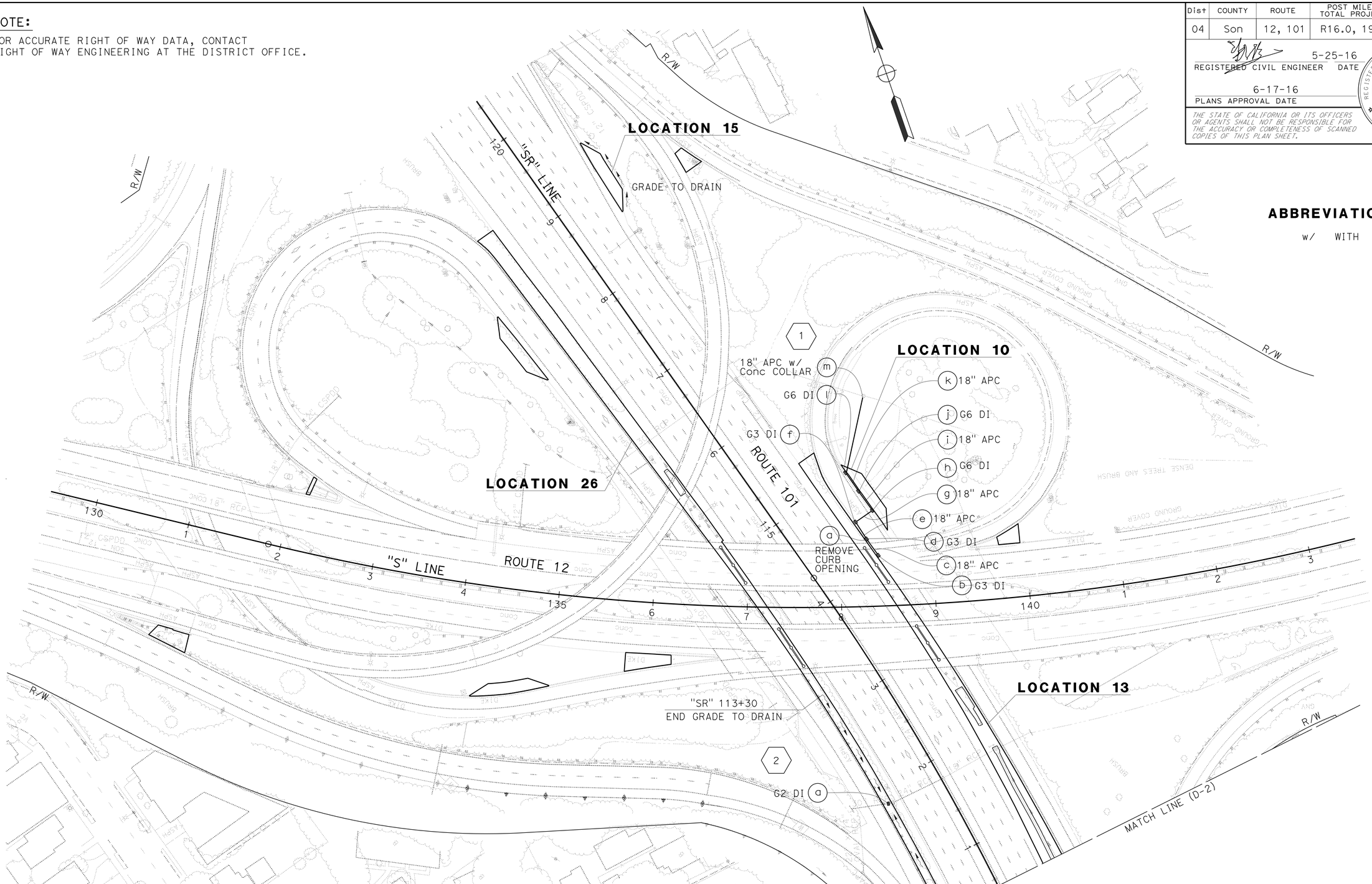

ABBREVIATION:

w/ WITH

DRAINAGE PLAN

SCALE: 1" = 50'

APPROVED FOR DRAINAGE WORK ONLY

D-1

STATE OF CALIFORNIA - DEPARTMENT OF TRANSPORTATION

Caltrans

HYDRAULICS

FUNCTIONAL SUPERVISOR: JOSEPH PETERSON

CALCULATED-DESIGNED BY: KHAI LEONG

CHECKED BY: KATHLEEN REILLY

REVISED BY: KL

DATE REVISED: 5-25-16

LAST REVISION 05-24-16

DATE PLOTTED => 11-AUG-2016

TIME PLOTTED => 09:33

Dist	COUNTY	ROUTE	POST MILES TOTAL PROJECT	SHEET No.	TOTAL SHEETS
04	Son	12, 101	R16.0, 19.6	27	60

REGISTERED CIVIL ENGINEER DATE 5-25-16

PLANS APPROVAL DATE 6-17-16

REGISTERED PROFESSIONAL ENGINEER Khai Shoon Leong No. 76183 Exp. 6-30-16 CIVIL STATE OF CALIFORNIA

THE STATE OF CALIFORNIA OR ITS OFFICERS OR AGENTS SHALL NOT BE RESPONSIBLE FOR THE ACCURACY OR COMPLETENESS OF SCANNED COPIES OF THIS PLAN SHEET.

NOTE:

FOR ACCURATE RIGHT OF WAY DATA, CONTACT RIGHT OF WAY ENGINEERING AT THE DISTRICT OFFICE.

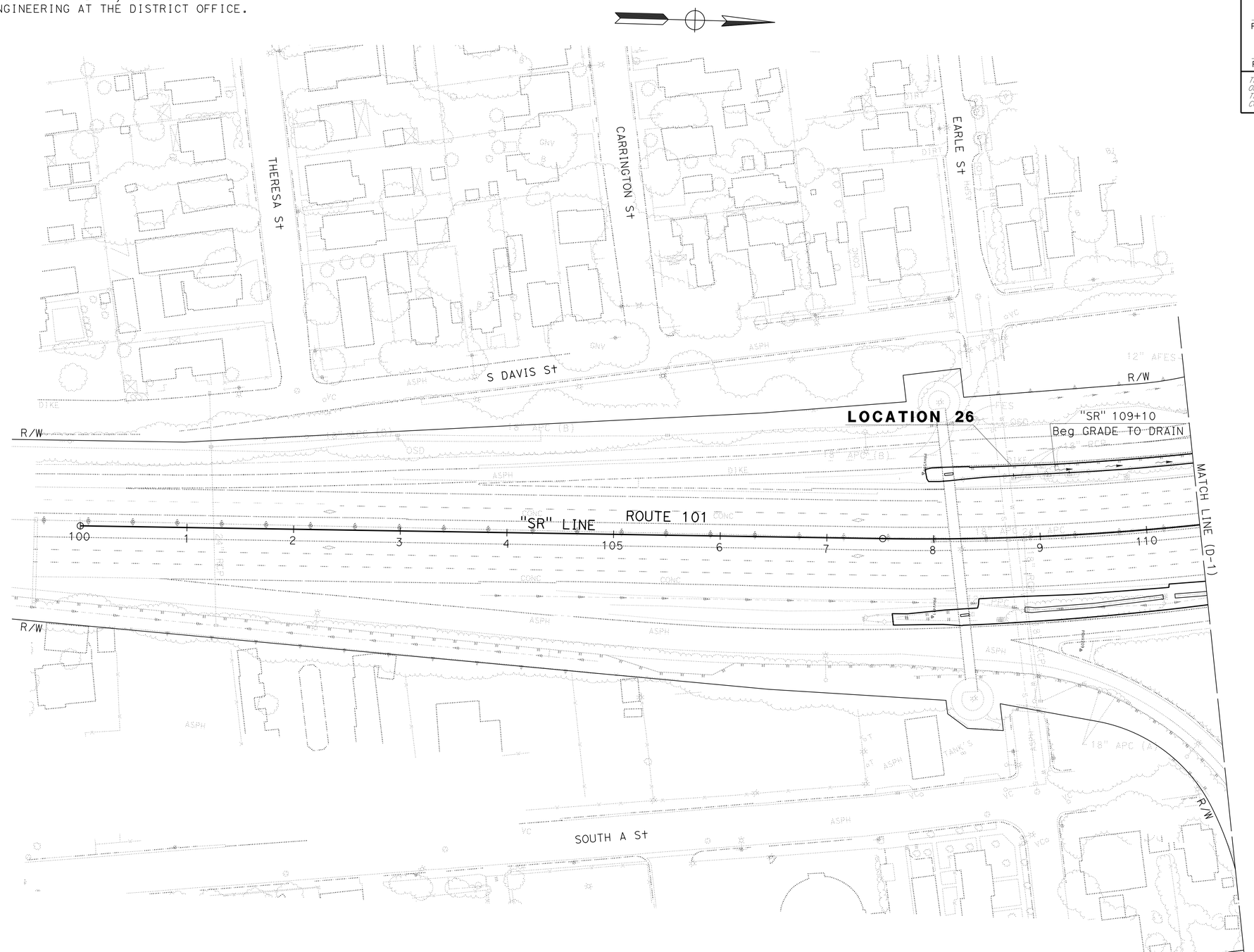

DRAINAGE PLAN

SCALE: 1" = 50'

D-2

APPROVED FOR DRAINAGE WORK ONLY

FOR NOTES, ABBREVIATIONS AND LEGEND, SEE SHEET D-1

STATE OF CALIFORNIA - DEPARTMENT OF TRANSPORTATION

Caltrans

HYDRAULICS

FUNCTIONAL SUPERVISOR: JOSEPH PETERSON

CALCULATED-DESIGNED BY: KHAI LEONG

CHECKED BY: KATHLEEN REILLY

REVISED BY: KL

DATE REVISED: 5-25-16

LAST REVISION 05-20-16

DATE PLOTTED => 11-AUG-2016

TIME PLOTTED => 09:33

BORDER LAST REVISED 7/2/2010

USERNAME => s126849

DGN FILE => 0412000157id002.dgn

RELATIVE BORDER SCALE IS IN INCHES 0 1 2 3

UNIT 0702

PROJECT NUMBER & PHASE 04120001571

Dist	COUNTY	ROUTE	POST MILES TOTAL PROJECT	SHEET No.	TOTAL SHEETS
04	Son	12, 101	R16.0, 19.6	28	60

Peter Aguilera 5-25-16
REGISTERED CIVIL ENGINEER DATE

6-17-16
PLANS APPROVAL DATE

REGISTERED PROFESSIONAL ENGINEER
Peter Aguilera
No. 55287
Exp. 12-31-16
CIVIL
STATE OF CALIFORNIA

THE STATE OF CALIFORNIA OR ITS OFFICERS OR AGENTS SHALL NOT BE RESPONSIBLE FOR THE ACCURACY OR COMPLETENESS OF SCANNED COPIES OF THIS PLAN SHEET.

ABBREVIATION:

TOG TOP OF GRATE

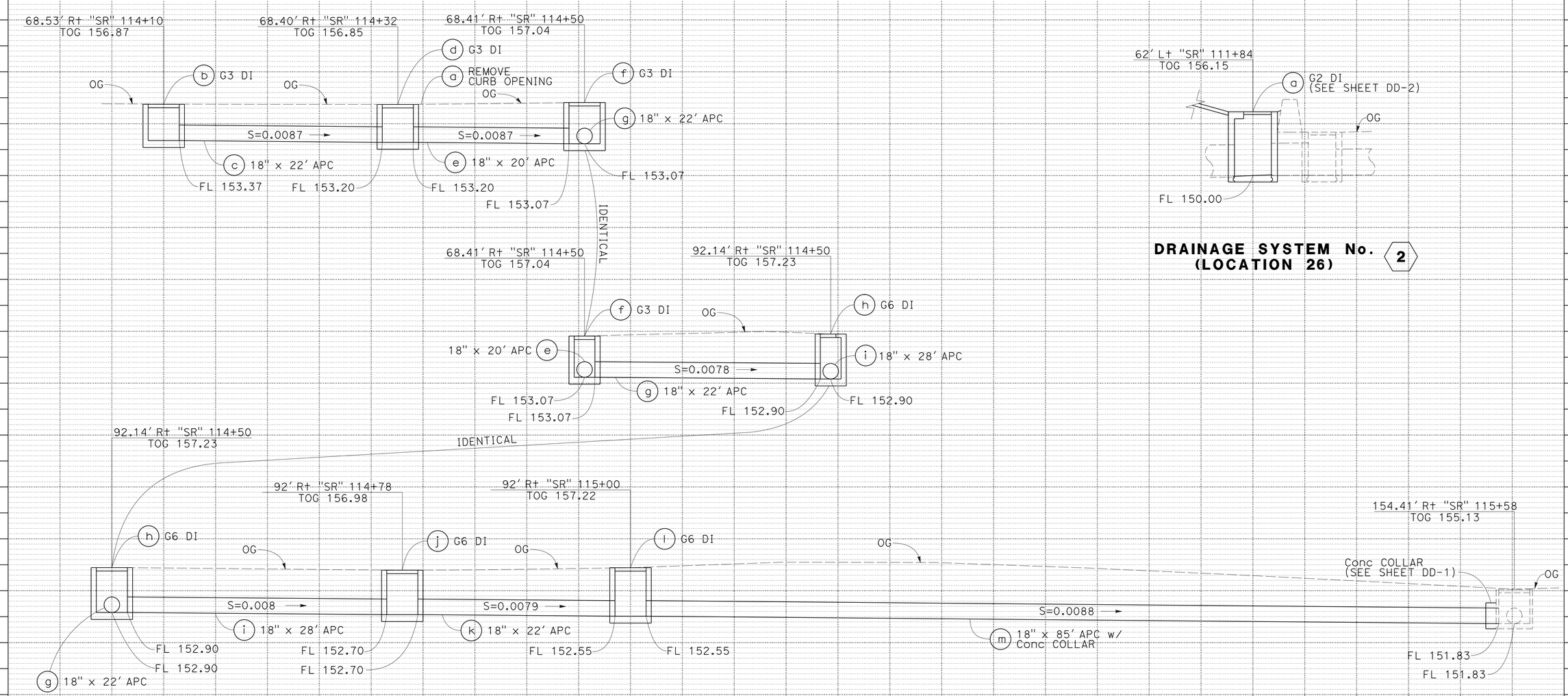

DRAINAGE SYSTEM No. (LOCATIONS 10 AND 13) 1

DRAINAGE SYSTEM No. (LOCATION 26) 2

DRAINAGE PROFILES

SCALE: Horiz 1" = 5'
Vert 1" = 5'

DP-1

STATE OF CALIFORNIA - DEPARTMENT OF TRANSPORTATION
Caltrans
DESIGN
FUNCTIONAL SUPERVISOR ARLISSA PANG
CALCULATED-DESIGNED BY PETER AGUILERA
CHECKED BY VAN HEW
REVISED BY PA
DATE REVISED 5-25-16

LAST REVISION 05-19-16
DATE PLOTTED => 11-AUG-2016
TIME PLOTTED => 09:33

Dist	COUNTY	ROUTE	POST MILES TOTAL PROJECT	SHEET No.	TOTAL SHEETS
04	Son	12, 101	R16.0, 19.6	29	60

REGISTERED CIVIL ENGINEER 5-25-16 DATE

PLANS APPROVAL DATE 6-17-16

REGISTERED PROFESSIONAL ENGINEER Khai Shoon Leong No. 76183 Exp. 6-30-16 CIVIL STATE OF CALIFORNIA

THE STATE OF CALIFORNIA OR ITS OFFICERS OR AGENTS SHALL NOT BE RESPONSIBLE FOR THE ACCURACY OR COMPLETENESS OF SCANNED COPIES OF THIS PLAN SHEET.

NOTES:

1. FOR INFORMATION NOT SHOWN, SEE RSP D73 AND STANDARD PLAN D73A.
2. IF WALL OF EXISTING DRAINAGE STRUCTURE HAS NO REINFORCING, DRILL AND BOND DOWELS, 1' ON CENTER, 6" INTO WALL AND BEND INTO COLLAR.
3. SQUARE OR CIRCULAR COLLAR OPTIONAL.

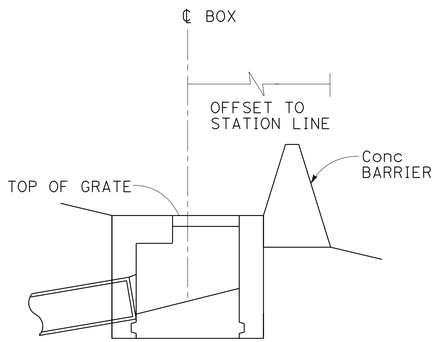

SECTION A-A

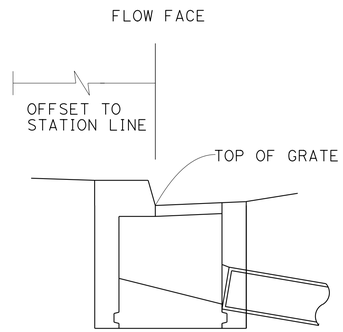

ELEVATION

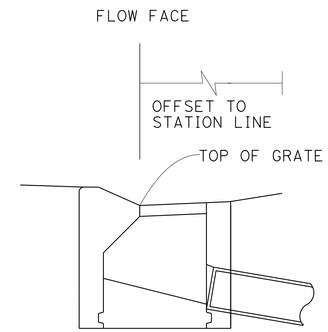

ELEVATION

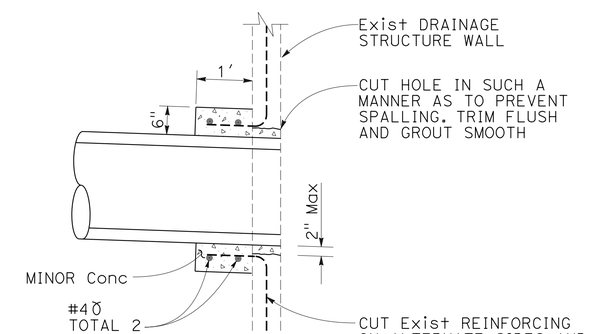

PIPE CONNECTION TO EXISTING DRAINAGE STRUCTURE

1 m

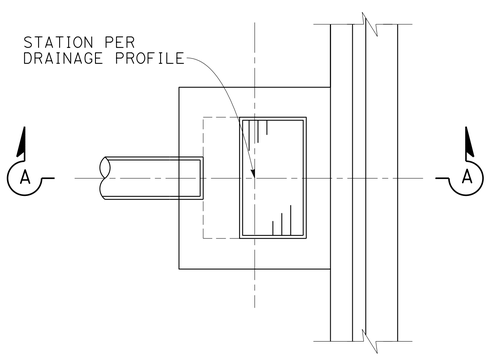

PLAN

INLET ADJACENT TO CONCRETE BARRIER

(TYPES 60E, 60GE, 60SC, 60SE, OR HIGH SIDE OF TYPES 60C, 60GC)

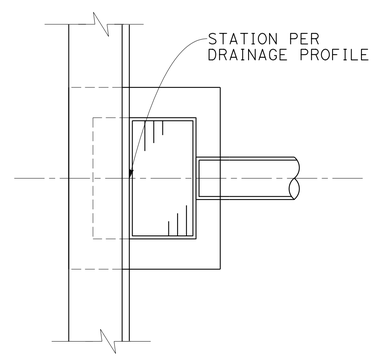

PLAN

INLET ADJACENT TO CURB

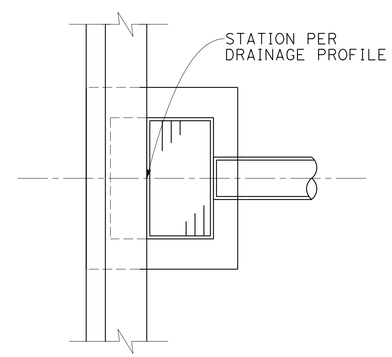

PLAN

INLET ADJACENT TO TYPE E CURB

DRAINAGE DETAILS

NO SCALE

DD-1

STATE OF CALIFORNIA - DEPARTMENT OF TRANSPORTATION

Caltrans®

HYDRAULICS

FUNCTIONAL SUPERVISOR: JOSEPH PETERSON

CALCULATED-DESIGNED BY: KHAI LEONG

CHECKED BY: KATHLEEN REILLY

REVISED BY: KL

DATE REVISED: 5-25-16

LAST REVISION 04-27-16

DATE PLOTTED => 11-AUG-2016

TIME PLOTTED => 09:33

Dist	COUNTY	ROUTE	POST MILES TOTAL PROJECT	SHEET No.	TOTAL SHEETS
04	Son	12, 101	R16.0, 19.6	30	60

REGISTERED CIVIL ENGINEER 5-25-16 DATE

6-17-16
PLANS APPROVAL DATE

REGISTERED PROFESSIONAL ENGINEER Khai Shoon Leong No. 76183 Exp. 6-30-16 CIVIL STATE OF CALIFORNIA

THE STATE OF CALIFORNIA OR ITS OFFICERS OR AGENTS SHALL NOT BE RESPONSIBLE FOR THE ACCURACY OR COMPLETENESS OF SCANNED COPIES OF THIS PLAN SHEET.

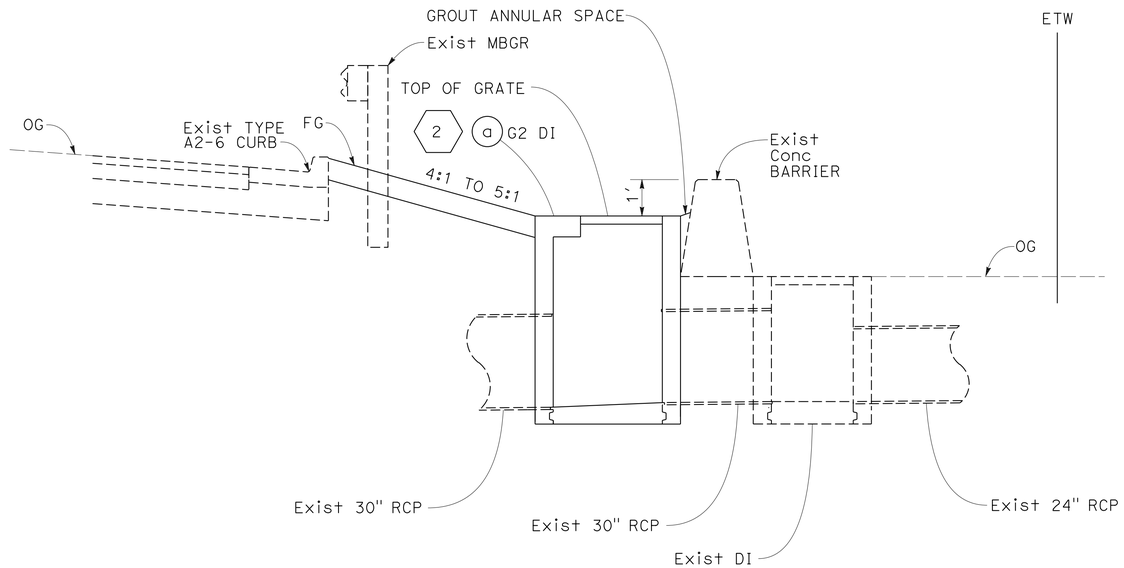

SECTION A-A

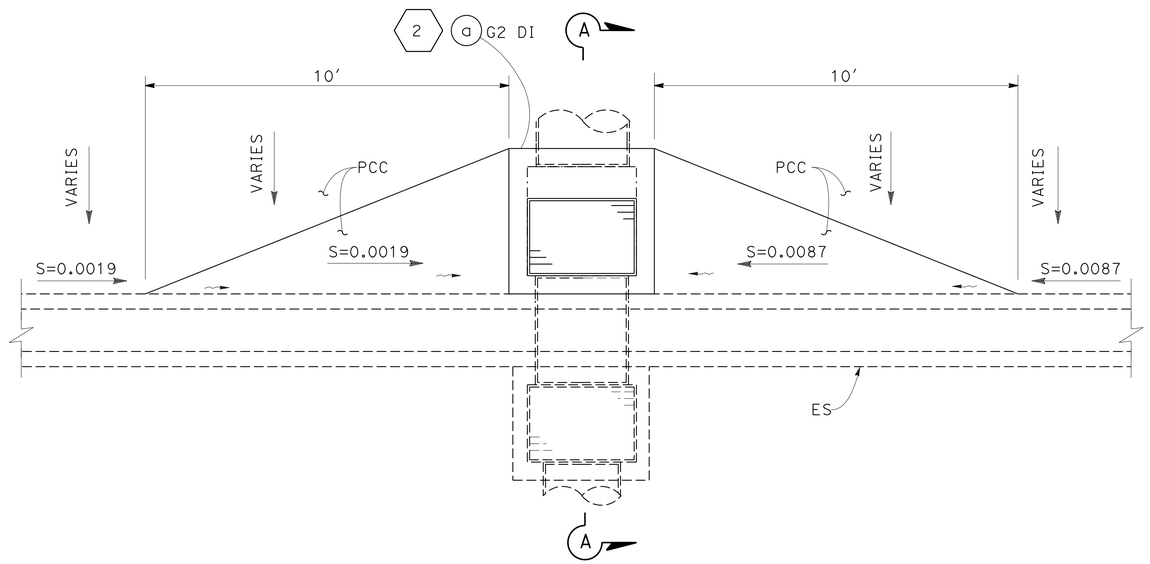

PLAN

TRANSITION TO INLET BEHIND BARRIER

2 a

DRAINAGE DETAILS

NO SCALE

DD-2

STATE OF CALIFORNIA - DEPARTMENT OF TRANSPORTATION
Caltrans
HYDRAULICS

FUNCTIONAL SUPERVISOR: JOSEPH PETERSON
CALCULATED-DESIGNED BY: KHAI LEONG
CHECKED BY: KATHLEEN REILLY
REVISED BY: KL
DATE REVISED: 5-25-16

LAST REVISION 05-25-16
DATE PLOTTED => 11-AUG-2016
TIME PLOTTED => 09:33

Dist	COUNTY	ROUTE	POST MILES TOTAL PROJECT	SHEET No.	TOTAL SHEETS
04	Son	12, 101	R16.0, 19.6	31	60

Peter Aguilera 5-25-16
REGISTERED CIVIL ENGINEER DATE

6-17-16
PLANS APPROVAL DATE

REGISTERED PROFESSIONAL ENGINEER Peter Aguilera No. 55287 Exp. 12-31-16 CIVIL STATE OF CALIFORNIA

THE STATE OF CALIFORNIA OR ITS OFFICERS OR AGENTS SHALL NOT BE RESPONSIBLE FOR THE ACCURACY OR COMPLETENESS OF SCANNED COPIES OF THIS PLAN SHEET.

ABBREVIATION:

S STANDARD JOINTS
w/ WITH

APC ALLOWABLE MATERIAL

CULVERT DESIGNATION	RCP	CSP (0.079" THICK)	PLASTIC PIPE	
	SIZE	SIZE	SIZE	INTERIOR TYPE
18" APC	18"	18"	18"	SMOOTH OR CORRUGATED

DRAINAGE QUANTITIES

DRAINAGE SYSTEM No.	DRAINAGE UNIT	REMOVE INLET	18" APC	STRUCTURAL CONCRETE, DRAINAGE INLET	STRUCTURE BACKFILL (SLURRY CEMENT)	Misc IRON AND STEEL	FRAME AND GRATE (N) (TYPE 18-9)	FRAME AND GRATE (N) (TYPE 24-9)	FRAME AND GRATE (N) (TYPE 24-12)	CONCRETE COLLAR (N)	MAXIMUM COVER (N)	HEIGHT OF INLET (N)	PIPE JOINT CLASSIFICATION (N)	DESCRIPTION	STATION	DRAINAGE SYSTEM No.	DRAINAGE UNIT
		EA	LF	CY		LB	EA				LF						
1	a	1												REMOVE CURB OPENING	68.13' Rt "SR" 114+31 TO 68.13' 114+37.50	1	a
	b			1.14		326			1			3.50		G3 DI	68.53' Rt "SR" 114+10		b
	c		22		3.30						2.1		S	18" x 22' APC	68.53' Rt "SR" 114+10 TO 68.40' 114+32		c
	d			1.17		326			1			3.65		G3 DI	68.40' Rt "SR" 114+32		d
	e		20		3.43						2.5		S	18" x 20' APC	68.40' Rt "SR" 114+32 TO 68.41' 114+50		e
	f			1.24		326			1			3.97		G3 DI	68.41' Rt "SR" 114+50		f
	g		22		4.47						3		S	18" x 22' APC	68.41' Rt "SR" 114+50 TO 92.14' 114+50		g
	h			1.33		249	1					4.33		G6 DI	92.14' Rt "SR" 114+50		h
	i		28		6.09						2.8		S	18" x 28' APC	92.14' Rt "SR" 114+50 TO 92' 114+78		i
	j			1.32		249	1					4.28		G6 DI	92' Rt "SR" 114+78		j
	k		22		5.13						3.2		S	18" x 22' APC	92' Rt "SR" 114+78 TO 92' 115+00		k
	l			1.41		249	1					4.67		G6 DI	92' Rt "SR" 115+00		l
	m		85							1	3.9		S	18" x 85' APC w/ Conc COLLAR	92' Rt "SR" 115+00 TO 154.41' 115+58		m
2	a			2.11		263		1				6.15		G2 DI	62' Lt "SR" 111+84	2	a
TOTAL		1	199	9.72	22.42	1988	3	1	3	1				SHEET TOTAL			

(N) NOT A SEPARATE PAY ITEM, FOR INFORMATION ONLY

STATE OF CALIFORNIA - DEPARTMENT OF TRANSPORTATION
Caltrans DESIGN

FUNCTIONAL SUPERVISOR: ARLISSA PANG
CALCULATED-DESIGNED BY: PETER AGUILERA
CHECKED BY: VAN HEW
REVISED BY: PA
DATE REVISED: 5-25-16

LAST REVISION 05-25-16
DATE PLOTTED => 11-AUG-2016
TIME PLOTTED => 09:33

DRAINAGE QUANTITIES DQ-1

Dist	COUNTY	ROUTE	POST MILES TOTAL PROJECT	SHEET No.	TOTAL SHEETS
04	Son	12, 101	R16.0, 19.6	32	60

REGISTERED CIVIL ENGINEER 6-14-16 DATE

6-17-16
PLANS APPROVAL DATE

REGISTERED PROFESSIONAL ENGINEER Duc Duy Vo No. 74538 Exp. 12-31-17 CIVIL STATE OF CALIFORNIA

THE STATE OF CALIFORNIA OR ITS OFFICERS OR AGENTS SHALL NOT BE RESPONSIBLE FOR THE ACCURACY OR COMPLETENESS OF SCANNED COPIES OF THIS PLAN SHEET.

NOTE:

1. EXACT LOCATION AND POSITION OF ROADSIDE SIGNS AND CONSTRUCTION AREA SIGNS TO BE DETERMINED BY THE ENGINEER.

LEGEND:

CONSTRUCTION AREA SIGN DESIGNATION

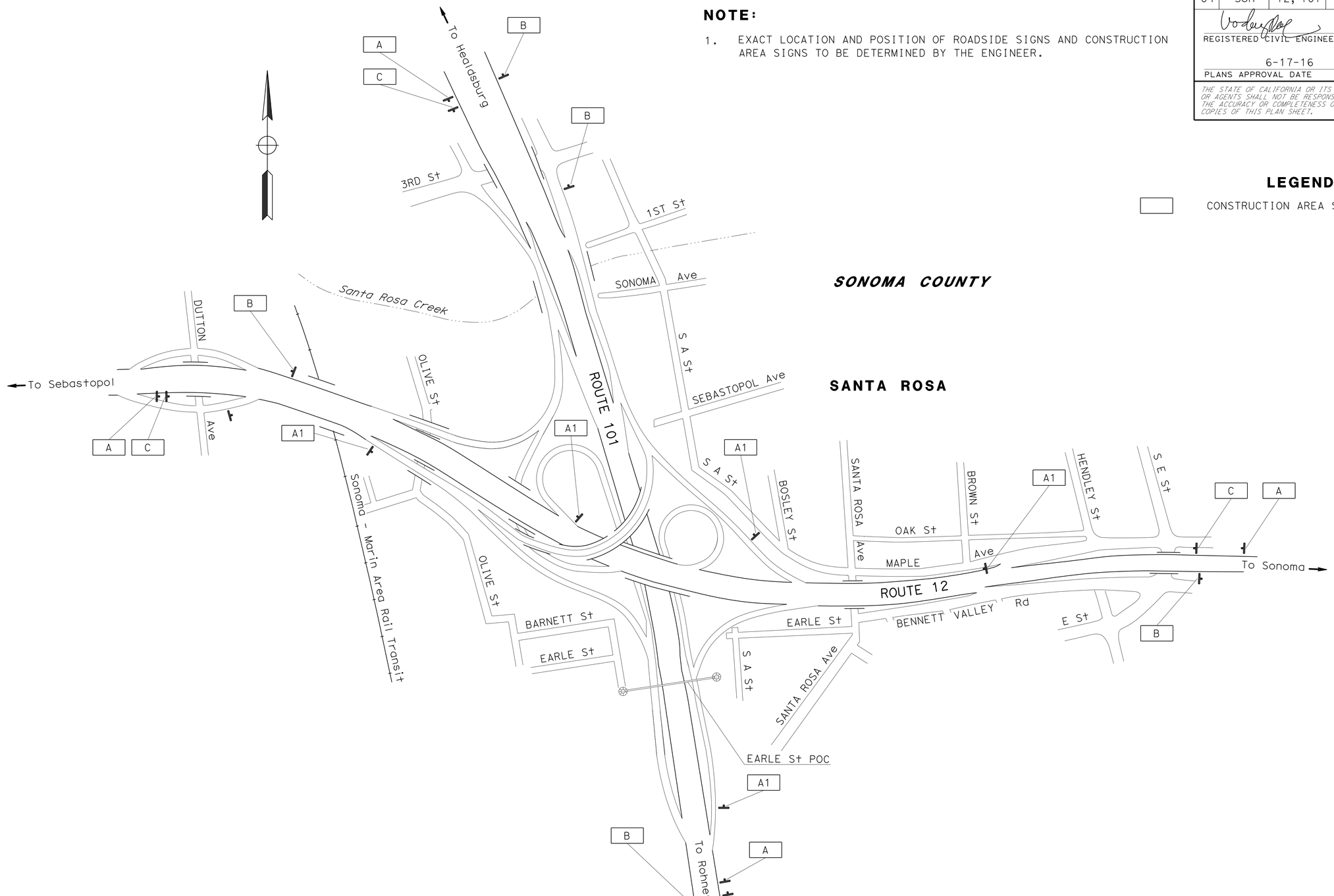

CONSTRUCTION AREA SIGNS
NO SCALE

APPROVED FOR CONSTRUCTION AREA SIGN WORK ONLY

CS-1

STATE OF CALIFORNIA - DEPARTMENT OF TRANSPORTATION
Caltrans
TRAFFIC

FUNCTIONAL SUPERVISOR: RAJESH OBEROI

CALCULATED-DESIGNED BY: DUC VO
CHECKED BY: RAJESH OBEROI

REVISED BY: DV
DATE REVISED: 5-26-16

LAST REVISION 05-26-16 | DATE PLOTTED => 11-AUG-2016 | TIME PLOTTED => 09:33

Dist	COUNTY	ROUTE	POST MILES TOTAL PROJECT	SHEET No.	TOTAL SHEETS
04	Son	12, 101	R16.0, 19.6	33	60

REGISTERED CIVIL ENGINEER 6-14-16 DATE

6-17-16
PLANS APPROVAL DATE

REGISTERED PROFESSIONAL ENGINEER Duc Duy Vo No. 74538 Exp. 12-31-17 CIVIL STATE OF CALIFORNIA

THE STATE OF CALIFORNIA OR ITS OFFICERS OR AGENTS SHALL NOT BE RESPONSIBLE FOR THE ACCURACY OR COMPLETENESS OF SCANNED COPIES OF THIS PLAN SHEET.

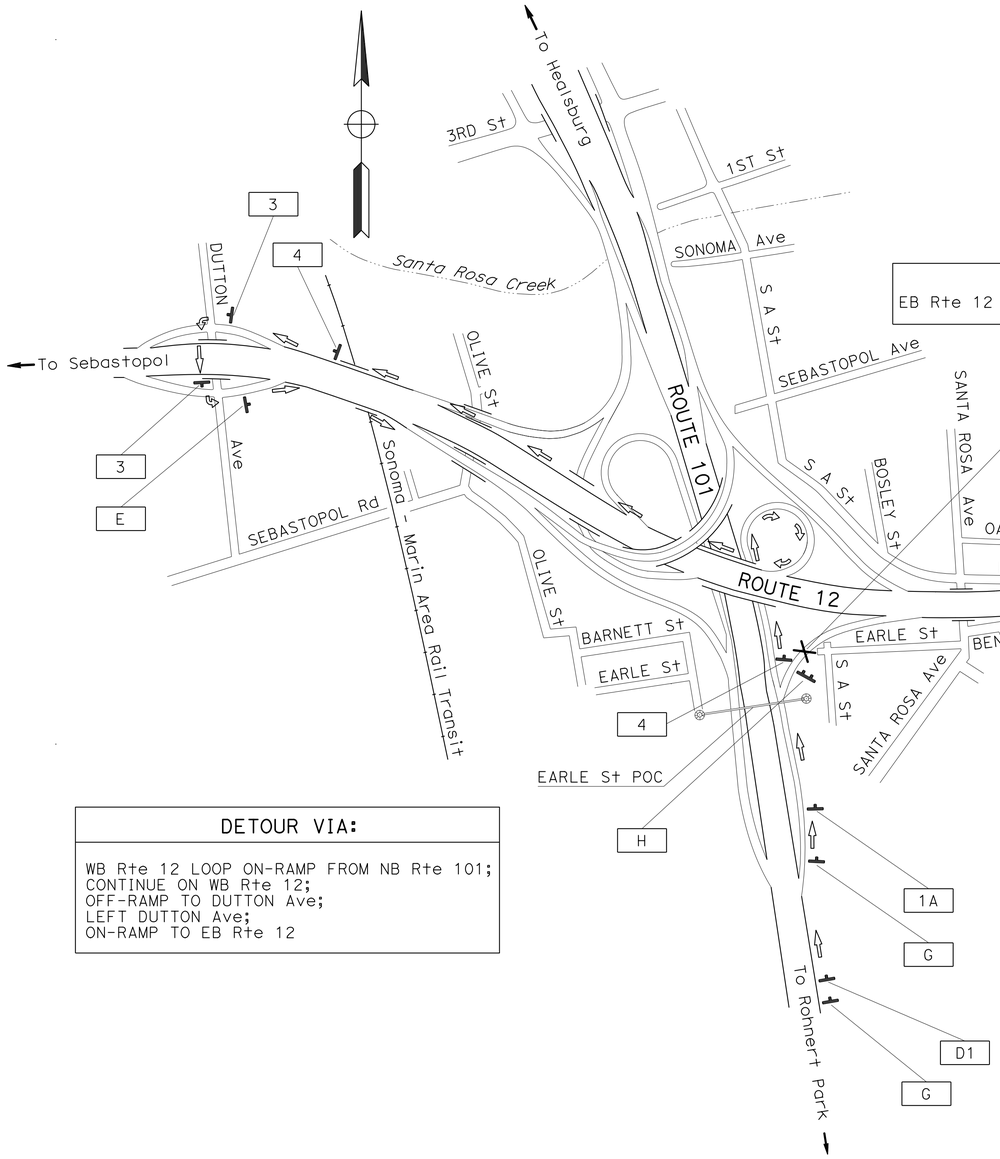

CLOSED
EB Rte 12 CONNECTOR ON-RAMP FROM NB Rte 101

DETOUR VIA:

WB Rte 12 LOOP ON-RAMP FROM NB Rte 101;
CONTINUE ON WB Rte 12;
OFF-RAMP TO DUTTON Ave;
LEFT DUTTON Ave;
ON-RAMP TO EB Rte 12

DETOUR PLAN No. 1

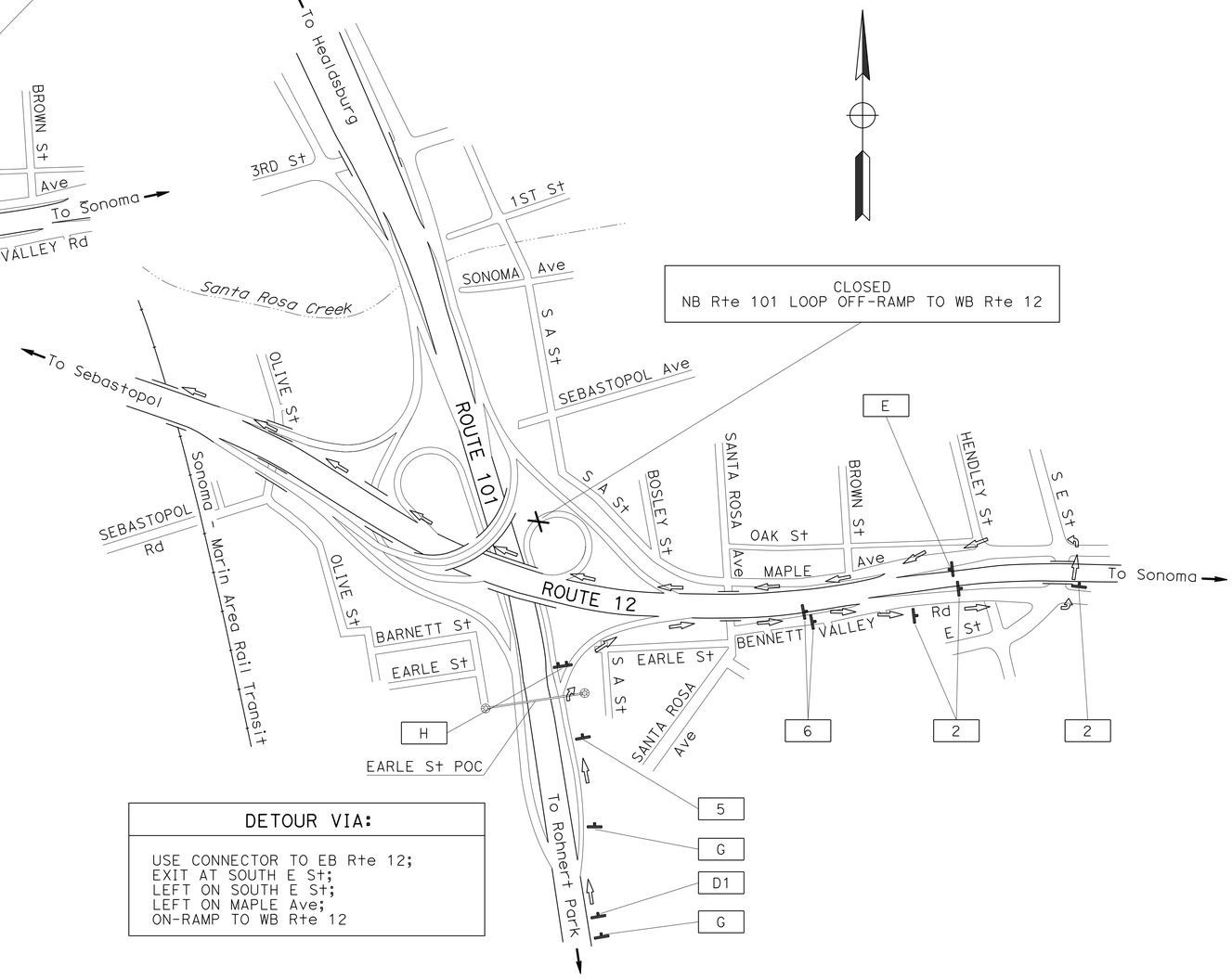

CLOSED
NB Rte 101 LOOP OFF-RAMP TO WB Rte 12

DETOUR VIA:

USE CONNECTOR TO EB Rte 12;
EXIT AT SOUTH E St;
LEFT ON SOUTH E St;
LEFT ON MAPLE Ave;
ON-RAMP TO WB Rte 12

DETOUR PLAN No. 2

CONSTRUCTION AREA SIGNS

NO SCALE

APPROVED FOR CONSTRUCTION AREA SIGN WORK ONLY

FOR NOTES, ABBREVIATIONS AND LEGEND, SEE SHEET CS-1

CS-2

CALCULATED-DESIGNED BY	DV
CHECKED BY	
REVISED BY	DV
DATE REVISED	5-26-16
FUNCTIONAL SUPERVISOR	RAJESH OBEROI
DUC VO	RAJESH OBEROI

STATE OF CALIFORNIA - DEPARTMENT OF TRANSPORTATION
Caltrans
TRAFFIC

LAST REVISION 06-01-16 | DATE PLOTTED => 11-AUG-2016 TIME PLOTTED => 09:33

Dist	COUNTY	ROUTE	POST MILES TOTAL PROJECT	SHEET No.	TOTAL SHEETS
04	Son	12, 101	R16.0, 19.6	34	60

REGISTERED CIVIL ENGINEER 6-14-16 DATE

6-17-16
PLANS APPROVAL DATE

REGISTERED PROFESSIONAL ENGINEER Duc Duy Vo No. 74538 Exp. 12-31-17 CIVIL STATE OF CALIFORNIA

THE STATE OF CALIFORNIA OR ITS OFFICERS OR AGENTS SHALL NOT BE RESPONSIBLE FOR THE ACCURACY OR COMPLETENESS OF SCANNED COPIES OF THIS PLAN SHEET.

REVISED BY	DATE REVISED
DV	5-26-16

CALCULATED-DESIGNED BY: DUC VO
CHECKED BY: RAJESH OBEROI
FUNCTIONAL SUPERVISOR: RAJESH OBEROI

STATE OF CALIFORNIA - DEPARTMENT OF TRANSPORTATION
Caltrans
TRAFFIC

OFF-RAMP TO Rte 12 CLOSED	USE NEXT EXIT FOLLOW DETOUR
1st FRAME	**2nd FRAME**

PCMS-1

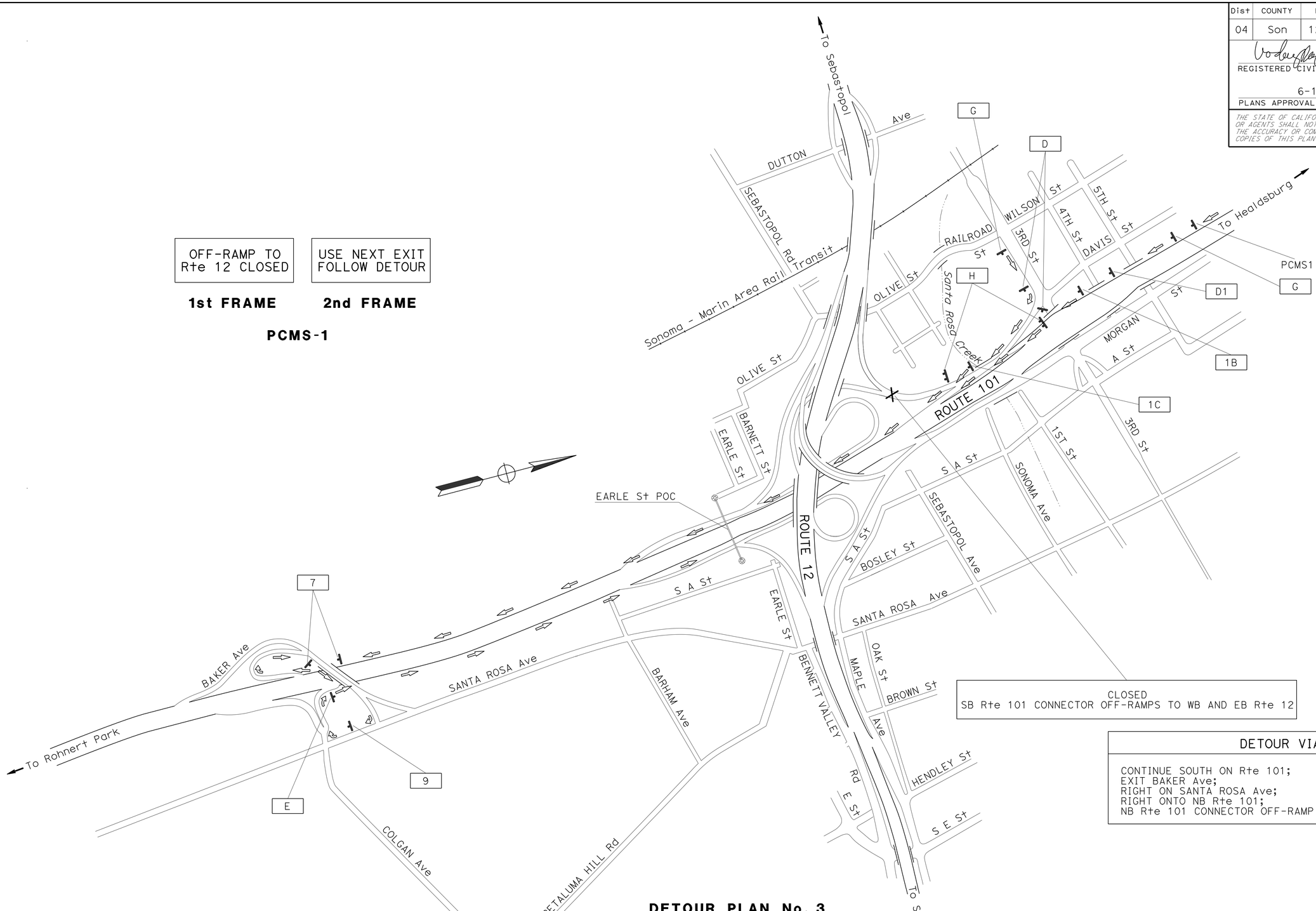

CLOSED
SB Rte 101 CONNECTOR OFF-RAMPS TO WB AND EB Rte 12

DETOUR VIA:

CONTINUE SOUTH ON Rte 101;
EXIT BAKER Ave;
RIGHT ON SANTA ROSA Ave;
RIGHT ONTO NB Rte 101;
NB Rte 101 CONNECTOR OFF-RAMP TO WB OR EB Rte 12

DETOUR PLAN No. 3

APPROVED FOR CONSTRUCTION AREA SIGN WORK ONLY

FOR NOTES, ABBREVIATIONS AND LEGEND, SEE SHEET CS-1

CONSTRUCTION AREA SIGNS

NO SCALE

CS-3

LAST REVISION 06-14-16
DATE PLOTTED => 11-AUG-2016
TIME PLOTTED => 09:33

Dist	COUNTY	ROUTE	POST MILES TOTAL PROJECT	SHEET No.	TOTAL SHEETS
04	Son	12, 101	R16.0, 19.6	35	60

REGISTERED CIVIL ENGINEER 6-14-16 DATE

6-17-16
PLANS APPROVAL DATE

REGISTERED PROFESSIONAL ENGINEER Duc Duy Vo No. 74538 Exp. 12-31-17 CIVIL STATE OF CALIFORNIA

THE STATE OF CALIFORNIA OR ITS OFFICERS OR AGENTS SHALL NOT BE RESPONSIBLE FOR THE ACCURACY OR COMPLETENESS OF SCANNED COPIES OF THIS PLAN SHEET.

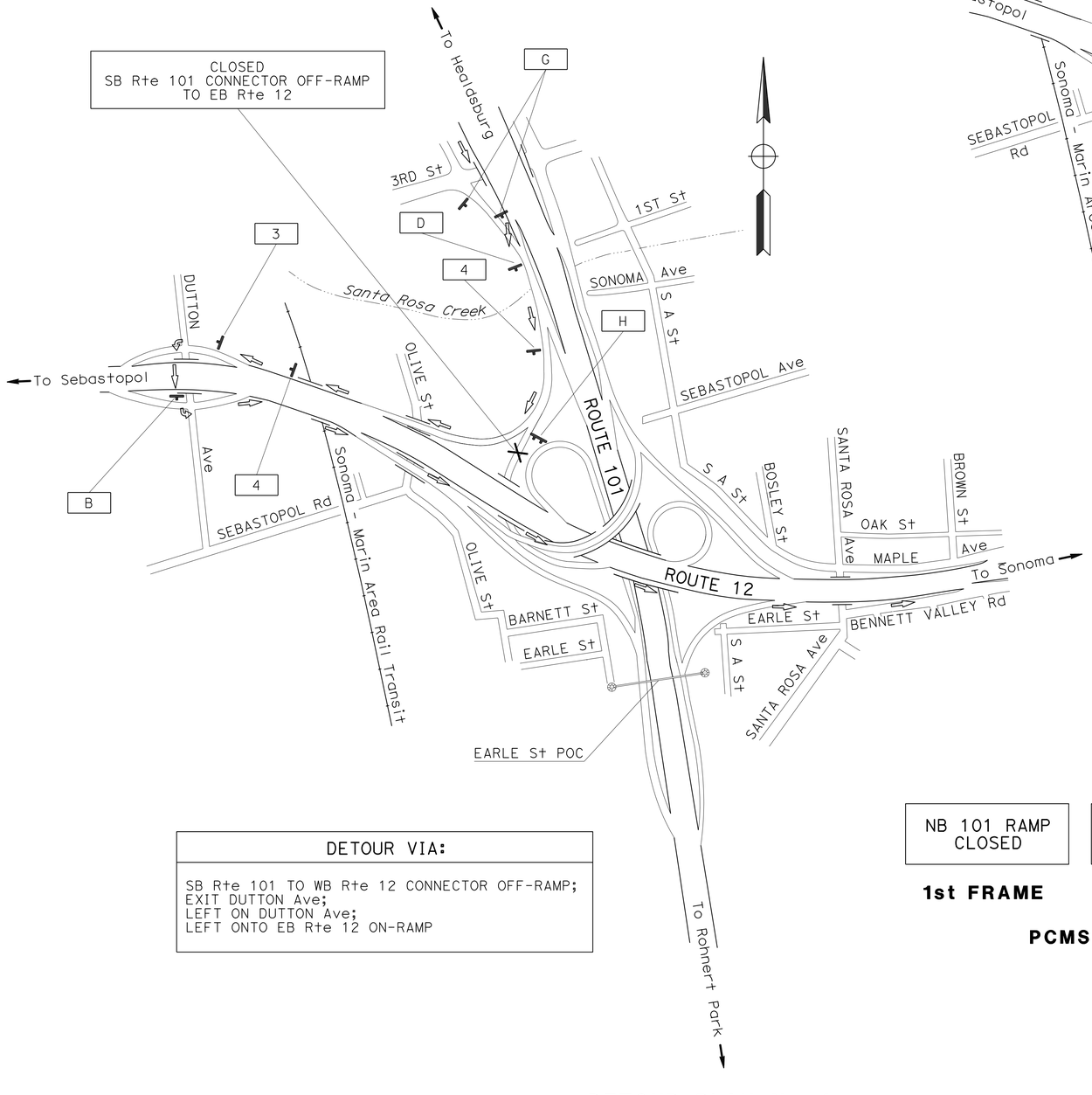

DETOUR VIA:

SB Rte 101 TO WB Rte 12 CONNECTOR OFF-RAMP;
EXIT DUTTON Ave;
LEFT ON DUTTON Ave;
LEFT ONTO EB Rte 12 ON-RAMP

DETOUR PLAN No. 4

NB 101 RAMP CLOSED	TAKE SB 101 TO NEXT EXIT
1st FRAME	**2nd FRAME**

PCMS-2

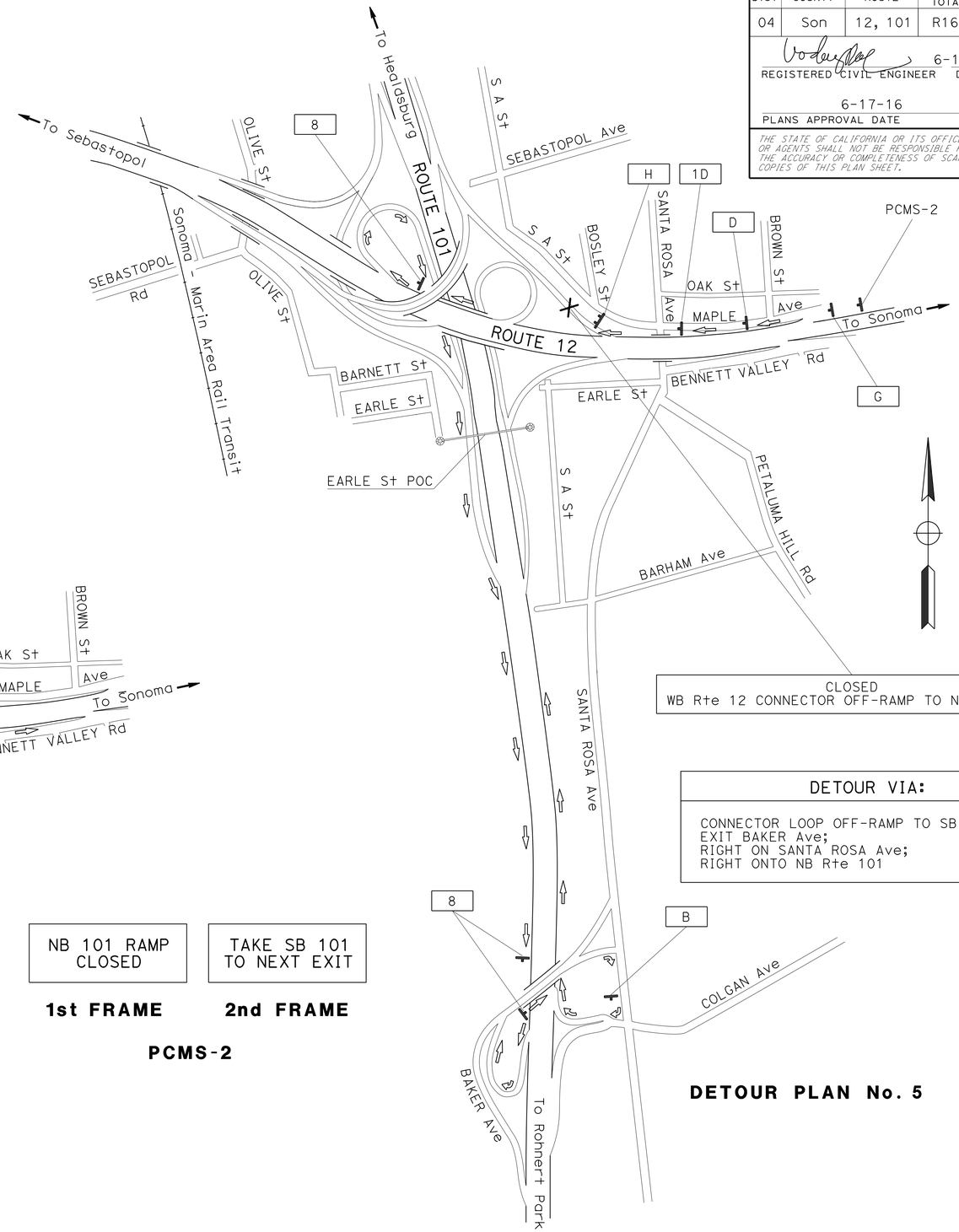

DETOUR VIA:

CONNECTOR LOOP OFF-RAMP TO SB Rte 101;
EXIT BAKER Ave;
RIGHT ON SANTA ROSA Ave;
RIGHT ONTO NB Rte 101

DETOUR PLAN No. 5

CONSTRUCTION AREA SIGNS

NO SCALE

APPROVED FOR CONSTRUCTION AREA SIGN WORK ONLY

FOR NOTES, ABBREVIATIONS AND LEGEND, SEE SHEET CS-1

CS-4

DV	5-26-16	DUC VO	RAJESH OBEROI
REVISED BY	DATE REVISED	CALCULATED-DESIGNED BY	CHECKED BY
FUNCTIONAL SUPERVISOR	RAJESH OBEROI		

STATE OF CALIFORNIA - DEPARTMENT OF TRANSPORTATION
Caltrans
TRAFFIC

LAST REVISION 06-01-16 | DATE PLOTTED => 11-AUG-2016 | TIME PLOTTED => 09:33

Dist	COUNTY	ROUTE	POST MILES TOTAL PROJECT	SHEET No.	TOTAL SHEETS
04	Son	12, 101	R16.0, 19.6	36	60

REGISTERED CIVIL ENGINEER 6-14-16 DATE

6-17-16
PLANS APPROVAL DATE

REGISTERED PROFESSIONAL ENGINEER Duc Duy Vo No. 74538 Exp. 12-31-17 CIVIL STATE OF CALIFORNIA

THE STATE OF CALIFORNIA OR ITS OFFICERS OR AGENTS SHALL NOT BE RESPONSIBLE FOR THE ACCURACY OR COMPLETENESS OF SCANNED COPIES OF THIS PLAN SHEET.

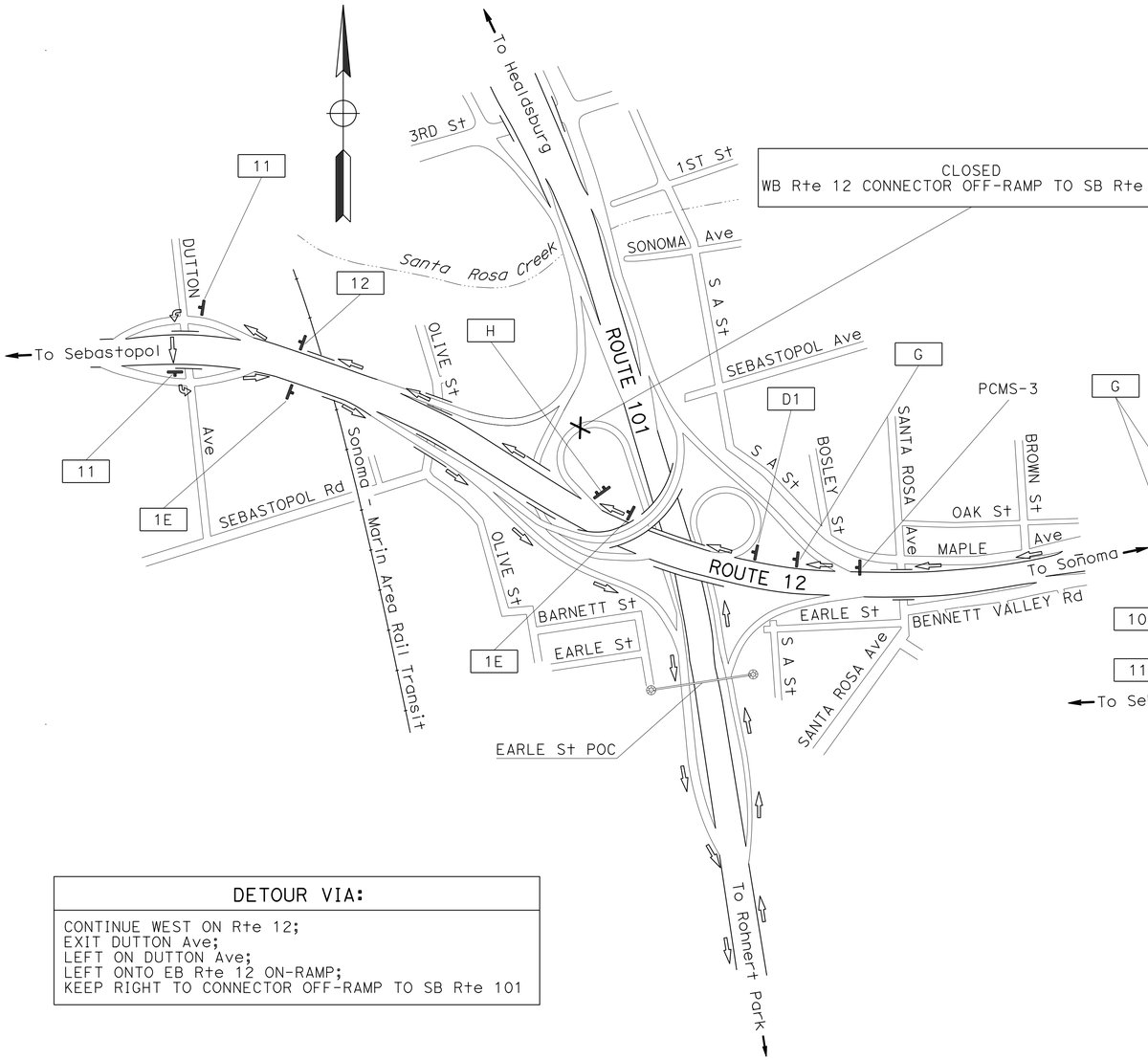

DETOUR VIA:
CONTINUE WEST ON Rte 12; EXIT DUTTON Ave; LEFT ON DUTTON Ave; LEFT ONTO EB Rte 12 ON-RAMP; KEEP RIGHT TO CONNECTOR OFF-RAMP TO SB Rte 101

DETOUR PLAN No. 6

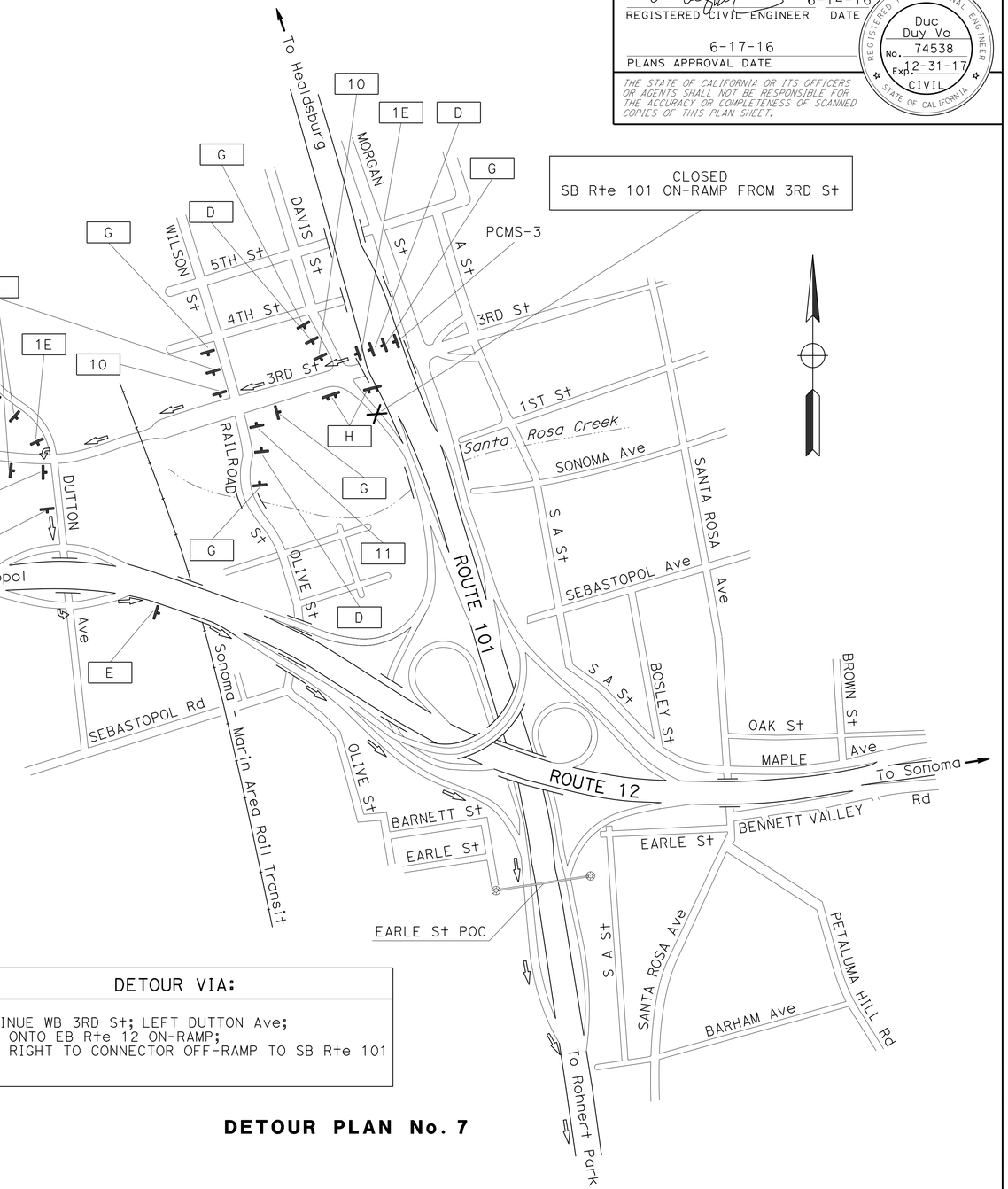

DETOUR VIA:
CONTINUE WB 3RD St; LEFT DUTTON Ave; LEFT ONTO EB Rte 12 ON-RAMP; KEEP RIGHT TO CONNECTOR OFF-RAMP TO SB Rte 101

DETOUR PLAN No. 7

ON-RAMP TO SB 101 CLOSED	FOLOW DETOUR
1st FRAME	**2nd FRAME**

PCMS-3

CONSTRUCTION AREA SIGNS

NO SCALE

APPROVED FOR CONSTRUCTION AREA SIGN WORK ONLY

FOR NOTES, ABBREVIATIONS AND LEGEND, SEE SHEET CS-1

CS-5

DUC VO	DV
RAJESH OBEROI	5-26-16
CALCULATED-DESIGNED BY	REVISED BY
CHECKED BY	DATE REVISED
FUNCTIONAL SUPERVISOR	
RAJESH OBEROI	

STATE OF CALIFORNIA - DEPARTMENT OF TRANSPORTATION
Caltrans
TRAFFIC

LAST REVISION 06-14-16 | DATE PLOTTED => 11-AUG-2016 | TIME PLOTTED => 09:33

Dist	COUNTY	ROUTE	POST MILES TOTAL PROJECT	SHEET No.	TOTAL SHEETS
04	Son	12, 101	R16.0, 19.6	37	60

REGISTERED CIVIL ENGINEER DATE 6-14-16

PLANS APPROVAL DATE 6-17-16

REGISTERED PROFESSIONAL ENGINEER Duc Duy Vo No. 74538 Exp. 12-31-17 CIVIL STATE OF CALIFORNIA

THE STATE OF CALIFORNIA OR ITS OFFICERS OR AGENTS SHALL NOT BE RESPONSIBLE FOR THE ACCURACY OR COMPLETENESS OF SCANNED COPIES OF THIS PLAN SHEET.

STATIONARY MOUNTED CONSTRUCTION AREA SIGNS

SIGN No.	SIGN CODE	MESSAGE	PANEL SIZE (INCH x INCH)	No. OF POST AND SIZE (EA - INCH x INCH)	QUANTITY EA
A	W20-1	ROAD WORK AHEAD	48 x 48	1 - 4 x 6	5
A1	W20-1	ROAD WORK AHEAD	24 x 24	1 - 4 x 6	7
B	G20-2	END ROAD WORK	36 x 18	1 - 4 x 4	5
C	C40A(CA)	TRAFFIC FINES DOUBLED IN CONSTRUCTION ZONES	48 x 48	1 - 4 x 6	3
D	W20-2	DETOUR AHEAD	36 x 36	1 - 4 x 6	10
D1	W20-2	DETOUR AHEAD	48 x 48	1 - 4 x 6	4
E	M4-8A	END DETOUR	24 x 18	1 - 4 x 4	4
G	W20-3	RAMP CLOSED AHEAD	36 x 36	1 - 4 x 6	16
H	SC6-4(CA)	RAMP CLOSED (WITH DATE AND TIME)	60 x 48	2 - 4 x 6	9
1A	SC3(CA) M3-2 G28-2(CA)	DETOUR (STRAIGHT AHEAD ARROW) EAST STATE ROUTE SHIELD (12)	48 x 18 30 x 15 32 x 30	1 - 6 x 6	1
1B	SC3(CA) G28-2(CA)	DETOUR (STRAIGHT AHEAD ARROW) STATE ROUTE SHIELD (12)	48 x 18 32 x 30	1 - 6 x 6	1
1C	SC3(CA) G28-2(CA)	DETOUR (STRAIGHT AHEAD ARROW) STATE ROUTE SHIELD (12)	36 x 12 32 x 30	1 - 4 x 6	1
1D	SC3(CA) G47(CA) M1-4(101)	DETOUR (STRAIGHT AHEAD ARROW) NORTH US ROUTE SHIELD (101)	36 x 12 21 x 9 28 x 24	1 - 4 x 6	1
1E	SC3(CA) G48(CA) M1-4(101)	DETOUR (STRAIGHT AHEAD ARROW) SOUTH US ROUTE SHIELD (101)	36 x 12 21 x 9 28 x 24	1 - 4 x 6	4
2	M4-8 M3-4 G28-2(CA) G34(L†)(CA)	DETOUR WEST STATE ROUTE SHIELD (12) LEFT ARROW	24 x 12 21 x 9 28 x 24 21 x 15	1 - 4 x 6	3
3	M4-8 M3-2 G28-2(CA) G34(L†)(CA)	DETOUR EAST STATE ROUTE SHIELD (12) LEFT ARROW	24 x 12 21 x 9 28 x 24 21 x 15	1 - 4 x 6	3
4	M4-8 M3-2 G28-2(CA) G44(↗)(CA)	DETOUR EAST STATE ROUTE SHIELD (12) UPRIGHT DIAGONAL ARROW	24 x 12 24 x 12 25 x 24 21 x 15	1 - 4 x 6	4
5	M4-8 M3-4 G28-2(CA) G44(↗)(CA)	DETOUR WEST STATE ROUTE SHIELD (12) UPRIGHT DIAGONAL ARROW	24 x 12 24 x 12 25 x 24 21 x 15	1 - 4 x 6	1
6	M4-8 M3-4 G28-2(CA) G44(↗)(CA)	DETOUR WEST STATE ROUTE SHIELD (12) UPRIGHT DIAGONAL ARROW	30 x 15 30 x 15 32 x 30 21 x 15	1 - 6 x 6	2
7	M4-8 G28-2(CA) G44(↗)(CA)	DETOUR STATE ROUTE SHIELD (12) UPRIGHT DIAGONAL ARROW	30 x 15 32 x 30 21 x 15	1 - 6 x 6	2
8	M4-8 G47(CA) M1-4(101) G44(↗)(CA)	DETOUR NORTH US ROUTE SHIELD (101) UPRIGHT DIAGONAL ARROW	24 x 12 21 x 9 28 x 24 21 x 15	1 - 4 x 6	3
9	M4-8 G28-2(CA) G34(R†)(CA)	DETOUR STATE ROUTE SHIELD (12) RIGHT ARROW	24 x 12 25 x 24 21 x 15	1 - 4 x 6	1
10	M4-8 G48(CA) M1-4(101) G34(R†)(CA)	DETOUR SOUTH US ROUTE SHIELD (101) RIGHT ARROW	24 x 12 21 x 9 28 x 24 21 x 15	1 - 4 x 6	3
11	M4-8 G48(CA) M1-4(101) G34(L†)(CA)	DETOUR SOUTH US ROUTE SHIELD (101) LEFT ARROW	24 x 12 21 x 9 28 x 24 21 x 15	1 - 4 x 6	4
12	M4-8 G48(CA) M1-4(101) G44(↗)(CA)	DETOUR SOUTH US ROUTE SHIELD (101) UPRIGHT DIAGONAL ARROW	30 x 15 30 x 15 32 x 30 21 x 15	1 - 6 x 6	1
		TOTAL			98

CONSTRUCTION AREA SIGNS

CS-6

STATE OF CALIFORNIA - DEPARTMENT OF TRANSPORTATION
Caltrans
TRAFFIC

FUNCTIONAL SUPERVISOR: RAJESH OBEROI
CALCULATED-DESIGNED BY: DUC VO
CHECKED BY: RAJESH OBEROI
REVISED BY: DV
DATE REVISED: 5-26-16

LAST REVISION DATE PLOTTED => 11-AUG-2016
TIME PLOTTED => 09:33
06-14-16

Dist	COUNTY	ROUTE	POST MILES TOTAL PROJECT	SHEET No.	TOTAL SHEETS
04	Son	12, 101	R16.0, 19.6	38	60

Peter Aguilera 5-25-16
REGISTERED CIVIL ENGINEER DATE

6-17-16
PLANS APPROVAL DATE

REGISTERED PROFESSIONAL ENGINEER Peter Aguilera No. 55287 Exp. 12-31-16 CIVIL STATE OF CALIFORNIA

THE STATE OF CALIFORNIA OR ITS OFFICERS OR AGENTS SHALL NOT BE RESPONSIBLE FOR THE ACCURACY OR COMPLETENESS OF SCANNED COPIES OF THIS PLAN SHEET.

TREATED WOOD WASTE

SHEET No.	STATION	LB
L-6	"SR" 124+20 TO 125+06.65	1129
TOTAL		1129

REMOVE GUARDRAIL

SHEET No.	STATION	LF
L-6	"SR" 124+20 TO 125+06.65	87.5
TOTAL		87.5

REMOVE CURB

SHEET No.	STATION	LF
L-2	"S" 134+20.82 TO 134+99.43	85
TOTAL		85

HOT MIX ASPHALT DIKE

Loc No.	SHEET No.	STATION	PLACE HMA DIKE (TYPE E)	HMA (TYPE A)	REMOVE AC DIKE
			LF	TON	LF
23	L-6	"SR" 124+20 TO 125+14.09	95	2.5	95
TOTAL			95	2.5 (*)	95

(*) QUANTITY INCLUDED IN THE ROADWAY QUANTITIES TABLE

TEMPORARY REINFORCED SILT FENCE

Loc No.	SHEET No.	STATION	LF
18	L-7	57.55' R+ "SR" 130+87.72 TO 69.89' 130+94.47	15
19	L-7	57.64' R+ "SR" 132+99.49 TO 76.21' 133+07.39	21
22	L-7	68.54' L+ "SR" 132+49.47 TO 56.36' 132+53.97	14
24	L-7	70.04' L+ "SR" 130+28.94 TO 57.06' 130+36.22	15
TOTAL			65

ROADWAY QUANTITIES

Loc No.	SHEET No.	DESCRIPTION	STATION	AREA	ROADWAY Exc (TYPE Z-2) (AERIALLY DEPOSITED LEAD)	ROADWAY EXCAVATION	IMPORTED BORROW	HMA (TYPE A)	TACK COAT	MINOR CONCRETE (Misc CONSTRUCTION)	VEGETATION CONTROL (MINOR CONCRETE)
				SQFT	CY			TON		CY	SQYD
1	L-1	EB ROUTE 12 CONNECTOR TO ROUTE 101	"S" 124+53.22 TO 125+84.88	1906	24.7					9.6	129.6
2		EB ROUTE 12 CONNECTOR TO SB ROUTE 101	"S" 130+86.30 TO 131+27.85	628	8.1					3.7	38.4
3	L-2	SB ROUTE 101 CONNECTOR TO EB ROUTE 12 (MVP)	"S" 134+20.82 TO 134+99.43	821	23		1.2	43.1	0.035		
4		SB ROUTE 101 CONNECTOR TO EB ROUTE 12	"S" 135+75 TO 136+22.17	720	9.3					9.3	
5	L-3	NB ROUTE 101 CONNECTOR TO EB ROUTE 12	"S" 144+25 TO 145+56.74	1756	22.8					22.8	
6	L-4	SOUTH E STREET EB OFF-RAMP	"S" 159+37.93 TO 160+95	1653	21.4					21.4	
7	L-3	WB ROUTE 12, SANTA ROSA AVENUE UC	"S" 151+17.06 TO 152+49.33	837	10.9					5.3	47.4
8		WB ROUTE 12 CONNECTOR TO NB ROUTE 101	"S" 144+35 TO 145+18.45	1094	14.2					9.5	40.2
9		NB ROUTE 101 CONNECTOR TO WB ROUTE 12	"S" 139+70.36 TO 139+95	330	4.3					4.3	
10		NB ROUTE 101 CONNECTOR TO WB ROUTE 12 (MVP)	"SR" 114+27.22 TO 115+12.06	779	18.7		1	40.9	0.033		
11	L-2	WB ROUTE 12 CONNECTOR TO SB ROUTE 101 (MVP)	"SR" 117+65 TO 118+50	866		16.5	23.6	45.5	0.037		
12		WB ROUTE 12 CONNECTOR TO SB ROUTE 101	"S" 132+13.98 TO 132+22.06	77	1					1	
13		NB ROUTE 101 CONNECTOR TO WB ROUTE 12 (CURB)	"SR" 114+31 TO 114+37.50							0.4	
13	L-2, 5	NB ROUTE 101 AT ROUTE 12/101 SEPARATION (PAVE)	"SR" 107+62.14 TO 115+39	11752	152.3					109.2	369.4
14	L-2	EB ROUTE 12 CONNECTOR TO NB ROUTE 101	"SR" 118+60 TO 118+83.17	338		4.4				4.4	
15		THIRD STREET NB OFF-RAMP (MVP)	"SR" 118+65 TO 119+49.81	862		11.8	2.3	45.3	0.036		
16	L-6	THIRD STREET NB OFF-RAMP	"SR" 120+60 TO 121+46.72	838		10.9				1.6	79.8
17			"SR" 129+52.74 TO 130+06.92	284		3.7				3.7	
18		NB ON-RAMP FROM ROUTE 12	"SR" 130+37.07 TO 130+94.47	554		7.2				1.1	51.8
19	L-7		"SR" 132+99.49 TO 133+99.77	1485						19.3	
20		THIRD STREET NB OFF-RAMP	"SR" 133+44.88 TO 133+70	442		2.9				5.7	
21		THIRD STREET SB ON-RAMP	"SR" 133+77.02 TO 134+71	1131		7.3				14.7	
22		SB ROUTE 101 CONNECTOR TO WB ROUTE 12	"SR" 132+49.47 TO 133+29.72	533		3.5				1.4	47.3
23	L-6	SB ROUTE 101 CONNECTOR TO WB ROUTE 12 (MVP)	"SR" 124+20 TO 125+04.17	865	13.9		2	45.4	0.037		
23		SB ROUTE 101 CONNECTOR TO WB ROUTE 12 (HMA DIKE)	"SR" 124+20 TO 125+14.09					2.5			
24	L-6, 7	SB ROUTE 101, JUST SOUTH OF SANTA ROSA CREEK	"SR" 126+45.22 TO 130+36.22	4618		59.9				59.9	
25	L-6	SB ROUTE 101 CONNECTOR TO WB ROUTE 12	"SR" 124+65 TO 124+75.49	176		2.3				2.3	
26	L-2, 5	SB ROUTE 101 AT ROUTE 12/101 SEPARATION	"SR" 107+92.03 TO 119+28	12439	161.2					109.7	442.1
TOTAL					485.8	130.4	30.1	222.7	0.178	420.3	1246

SUMMARY OF QUANTITIES

Q-1

REVISED BY	DATE REVISED	CALCULATED-DESIGNED BY	CHECKED BY	FUNCTIONAL SUPERVISOR
PA	5-25-16	PETER AGUILERA	VAN HEW	ARLISSA PANG

STATE OF CALIFORNIA - DEPARTMENT OF TRANSPORTATION
Caltrans DESIGN

LAST REVISION 05-24-16 | DATE PLOTTED => 30-AUG-2016 | TIME PLOTTED => 13:12

Dist	COUNTY	ROUTE	POST MILES TOTAL PROJECT	SHEET No.	TOTAL SHEETS
04	Son	12, 101	R16.0, 19.6	39	60

LICENSED LANDSCAPE ARCHITECT

6-17-16
PLANS APPROVAL DATE

LICENSED LANDSCAPE ARCHITECT
DAVID WARREN YAM No. 1909
Signature
11-30-17
Renewal Date
5-26-16
Date
STATE OF CALIFORNIA

THE STATE OF CALIFORNIA OR ITS OFFICERS OR AGENTS SHALL NOT BE RESPONSIBLE FOR THE ACCURACY OR COMPLETENESS OF SCANNED COPIES OF THIS PLAN SHEET.

EROSION CONTROL TYPE 1

SEQUENCE	ITEM	MATERIAL		APPLICATION RATE	DEPTH
		DESCRIPTION	TYPE		
STEP 1	COMPOST	COMPOST	FINE	68 CY/ACRE	½"
STEP 2	HYDROSEED	SEED	SEED MIX 1	65 LB/ACRE	-
		FIBER	WOOD	500 LB/ACRE	-
STEP 3	HYDROMULCH	FIBER	WOOD	1,500 LB/ACRE	-
		TACKIFIER	GUAR	125 LB/ACRE	-

EROSION CONTROL TYPE 2

SEQUENCE	ITEM	MATERIAL		APPLICATION RATE	REMARKS
		DESCRIPTION	TYPE		
STEP 1	ROLLED EROSION CONTROL PRODUCT (NETTING)	NETTING	TYPE A	-	-
STEP 2	FIBER ROLLS	FIBER ROLL	8" TO 10" Dia AND 1.1 LB/ft	-	TYPE 1 FIBER ROLL INSTALLATION
STEP 3	COMPOST	COMPOST	FINE	68 CY/ACRE	-
STEP 4	HYDROSEED	SEED	SEED MIX 1	65 LB/ACRE	-
		FIBER	WOOD	500 LB/ACRE	-
STEP 5	HYDROMULCH	FIBER	WOOD	1,500 LB/ACRE	-
		TACKIFIER	GUAR	125 LB/ACRE	-

SEED MIX

SEED	BOTANICAL NAME (COMMON NAME)	PERCENT GERMINATION (MINIMUM)	POUNDS PURE LIVE SEED PER ACRE (SLOPE MEASUREMENT)
MIX 1	BROMUS CARINATUS, NATIVE (CALIFORNIA BROME)	67	11
	ELYMUS GLAUCUS (BLUE WILDRYE)	50	11
	HORDEUM BRACHYANTHERUM (MEADOW BARLEY)	47	11
	LEYMUS TRITICOIDES (BEARDLESS WILDRYE)	47	5
	NASSELLA PULCHRA (PURPLE NEEDLEGRASS)	47	10
	LOTUS PURSHIANUS (SPANISH LOTUS)	41	3
	LUPINUS BICOLOR (PYGMY-LEAF LUPINE)	50	4
	VULPIA MICROSTACHYS (SMALL FESCUE)	47	5
	VULPIA OCTOFLORA (SIX WEEKS FESCUE)	36	5
TOTAL			65

EROSION CONTROL LEGEND

ECL-1

CALCULATED-DESIGNED BY	ANGELA KWAN	REVISED BY	AK
CHECKED BY	DAVID W YAM	DATE REVISED	5-26-16

SENIOR LANDSCAPE ARCHITECT DAVID W YAM

STATE OF CALIFORNIA - DEPARTMENT OF TRANSPORTATION
Caltrans
WATER QUALITY

LAST REVISION 05-26-16 | DATE PLOTTED => 11-AUG-2016 | TIME PLOTTED => 09:33

Dist	COUNTY	ROUTE	POST MILES TOTAL PROJECT	SHEET No.	TOTAL SHEETS
04	Son	12, 101	R16.0, 19.6	40	60

LICENSED LANDSCAPE ARCHITECT

6-17-16
PLANS APPROVAL DATE

THE STATE OF CALIFORNIA OR ITS OFFICERS OR AGENTS SHALL NOT BE RESPONSIBLE FOR THE ACCURACY OR COMPLETENESS OF SCANNED COPIES OF THIS PLAN SHEET.

LICENSED LANDSCAPE ARCHITECT
DAVID WARREN YAM No. 1909
Signature
11-30-17
Renewal Date
5-26-16
Date
STATE OF CALIFORNIA

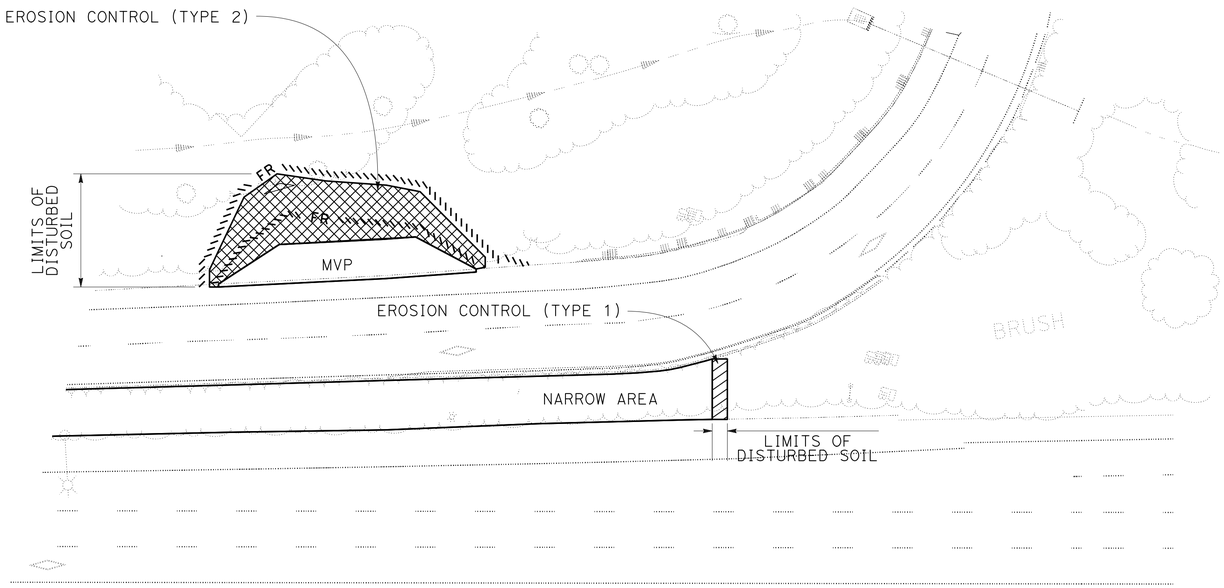

EROSION CONTROL TYPE 1 AND 2, (TYPICAL) AT MVP AND NARROW AREA

PLAN

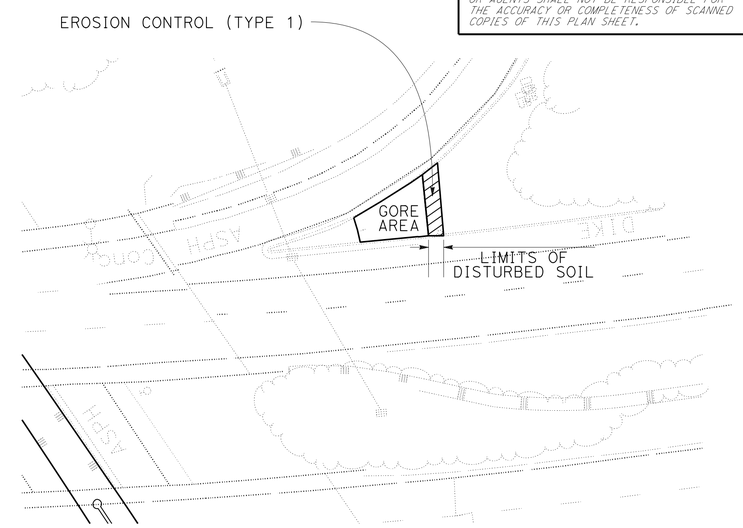

EROSION CONTROL TYPE 1, (TYPICAL) AT GORE AREA

PLAN

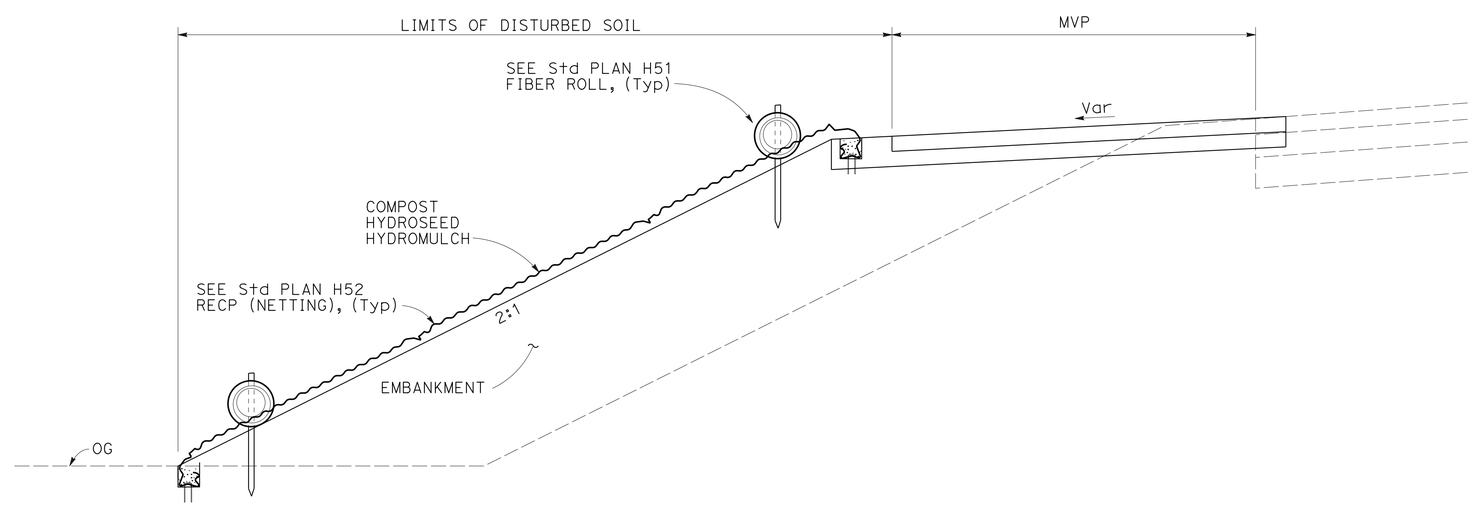

EROSION CONTROL TYPE 2, (TYPICAL)

SECTION

EROSION CONTROL DETAILS

NO SCALE

APPROVED FOR EROSION CONTROL WORK ONLY

ECD-1

REVISED BY	DATE REVISED
AK	5-26-16

CALCULATED-DESIGNED BY: ANGELA KWAN
CHECKED BY: DAVID W YAM

SENIOR LANDSCAPE ARCHITECT: DAVID W YAM

STATE OF CALIFORNIA - DEPARTMENT OF TRANSPORTATION
Caltrans®
WATER QUALITY

LAST REVISION 05-26-16
DATE PLOTTED => 11-AUG-2016
TIME PLOTTED => 09:33

Dist	COUNTY	ROUTE	POST MILES TOTAL PROJECT	SHEET No.	TOTAL SHEETS
04	Son	12, 101	R16.0, 19.6	41	60

LICENSED LANDSCAPE ARCHITECT

6-17-16
PLANS APPROVAL DATE

LICENSED LANDSCAPE ARCHITECT
DAVID WARREN YAM No. 1828
Signature
11-30-17
Renewal Date
5-26-16
Date
STATE OF CALIFORNIA

THE STATE OF CALIFORNIA OR ITS OFFICERS OR AGENTS SHALL NOT BE RESPONSIBLE FOR THE ACCURACY OR COMPLETENESS OF SCANNED COPIES OF THIS PLAN SHEET.

EROSION CONTROL QUANTITIES

LOCATION No.	Co	ROUTE	PM	DIRECTION	LOCATION DESCRIPTION	TYPE OF WORK	DESCRIPTION	FIBER ROLLS	COMPOST	HYDROSEED	HYDROMULCH	ROLLED EROSION CONTROL PRODUCT (NETTING)
								LF	SQFT			
1	Son	12	15.69	EB	EB Rte 12 CONNECTOR TO Rte 101	PAVE GORE AREA	EROSION CONTROL TYPE 1	-	150	150	150	-
2	Son	12	15.91	EB	EB Rte 12 CONNECTOR TO SB Rte 101	PAVE GORE AREA	EROSION CONTROL TYPE 1	-	150	150	150	-
3	Son	12	15.92	EB	SB Rte 101 CONNECTOR TO EB Rte 12	CONSTRUCT MVP	EROSION CONTROL TYPE 2	100	550	550	550	550
4	Son	12	16.00	EB	SB Rte 101 CONNECTOR TO EB Rte 12	PAVE GORE AREA	EROSION CONTROL TYPE 1	-	150	150	150	-
5	Son	12	16.16	EB	NB Rte 101 CONNECTOR TO EB Rte 12	PAVE GORE AREA	EROSION CONTROL TYPE 1	-	150	150	150	-
6	Son	12	16.46	EB	SOUTH E STREET EB OFF-RAMP	PAVE GORE AREA	EROSION CONTROL TYPE 1	-	150	150	150	-
7	Son	12	16.30	WB	WB Rte 12, SANTA ROSA Ave UC	PAVE NARROW AREA	EROSION CONTROL TYPE 1	-	150	150	150	-
8	Son	12	16.16	WB	WB Rte 12 CONNECTOR TO NB Rte 101	PAVE GORE AREA	EROSION CONTROL TYPE 1	-	150	150	150	-
9	Son	12	16.08	WB	NB Rte 101 CONNECTOR TO WB Rte 12	PAVE GORE AREA	EROSION CONTROL TYPE 1	-	150	150	150	-
10	Son	12	16.06	WB	NB Rte 101 CONNECTOR TO WB Rte 12	CONSTRUCT MVP	EROSION CONTROL TYPE 2	100	550	550	550	550
11	Son	12	15.98	WB	WB Rte 12 CONNECTOR TO SB Rte 101	CONSTRUCT MVP	EROSION CONTROL TYPE 2	350	2,150	2,150	2,150	2,150
12	Son	12	15.93	WB	WB Rte 12 CONNECTOR TO SB Rte 101	PAVE GORE AREA	EROSION CONTROL TYPE 1	-	150	150	150	-
13	Son	101	19.59	NB	NB Rte 101 AT Rte 12/101 Sep	PAVE NARROW AREA	EROSION CONTROL TYPE 1	-	150	150	150	-
14	Son	101	19.74	NB	EB Rte 12 CONNECTOR TO NB Rte 101	PAVE GORE AREA	EROSION CONTROL TYPE 1	-	150	150	150	-
15	Son	101	19.75	NB	THIRD St NB OFF-RAMP	CONSTRUCT MVP	EROSION CONTROL TYPE 2	100	550	550	550	550
16	Son	101	19.77	NB	THIRD St NB OFF-RAMP	PAVE GORE AREA	EROSION CONTROL TYPE 2	20	150	150	150	150
17	Son	101	19.95	NB	NB ON-RAMP FROM Rte 12	PAVE GORE AREA	EROSION CONTROL TYPE 1	-	150	150	150	-
18	Son	101	19.96	NB	NB ON-RAMP FROM Rte 12	PAVE GORE AREA	EROSION CONTROL TYPE 1	-	150	150	150	-
19	Son	101	20.02	NB	NB ON-RAMP FROM Rte 12	PAVE GORE AREA	EROSION CONTROL TYPE 1	-	150	150	150	-
20	Son	101	20.03	NB	THIRD St NB OFF-RAMP	PAVE GORE AREA	EROSION CONTROL TYPE 1	-	150	150	150	-
21	Son	101	20.04	SB	THIRD St SB ON-RAMP	PAVE GORE AREA	EROSION CONTROL TYPE 2	20	150	150	150	150
22	Son	101	20.01	SB	SB Rte 101 CONNECTOR TO WB Rte 12	PAVE GORE AREA	EROSION CONTROL TYPE 1	-	150	150	150	-
23	Son	101	19.95	SB	SB Rte 101 CONNECTOR TO WB Rte 12	CONSTRUCT MVP	EROSION CONTROL TYPE 2	350	1,500	1,500	1,500	1,500
24	Son	101	19.92	SB	SB Rte 101, JUST SOUTH OF SANTA ROSA CREEK	PAVE NARROW AREA	EROSION CONTROL TYPE 1	-	150	150	150	-
25	Son	101	19.84	SB	SB Rte 101 CONNECTOR TO WB Rte 12	PAVE GORE AREA	EROSION CONTROL TYPE 1	-	150	150	150	-
26	Son	101	19.63	SB	SB Rte 101 at Rte 12/101 Sep	PAVE NARROW AREA	EROSION CONTROL TYPE 1	-	150	150	150	-
TOTAL								1,040	8,450	8,450	8,450	5,600

REVISED BY: AK — DATE REVISED: 5-26-16
ANGELA KWAN — DAVID W YAM
CALCULATED-DESIGNED BY — CHECKED BY
SENIOR LANDSCAPE ARCHITECT: DAVID W YAM
STATE OF CALIFORNIA - DEPARTMENT OF TRANSPORTATION
Caltrans® WATER QUALITY

EROSION CONTROL QUANTITIES

ECQ-1

LAST REVISION 05-26-16 | DATE PLOTTED => 11-AUG-2016 | TIME PLOTTED => 09:33

M

Maint	MAINTENANCE
Max	MAXIMUM
MB	METAL BEAM
MBB	METAL BEAM BARRIER
MBGR	METAL BEAM GUARD RAILING
Med	MEDIAN
MGS	MIDWEST GUARDRAIL SYSTEM
MH	MANHOLE
Min	MINIMUM
Misc	MISCELLANEOUS
Misc I & S	MISCELLANEOUS IRON AND STEEL
Mkr	MARKER
Mod	MODIFIED,
	MODIFY
Mon	MONUMENT
MP	METAL PLATE
MPGR	METAL PLATE GUARD RAILING
MR	MOVEMENT RATING
MSE	MECHANICALLY STABILIZED EMBANKMENT
Mt	MOUNTAIN, MOUNT
Mtl	MATERIAL
MVP	MAINTENANCE VEHICLE PULLOUT

N

N	NORTH
NB	NORTHBOUND
No.	NUMBER (MUST HAVE PERIOD)
Nos.	NUMBERS (MUST HAVE PERIOD)
NPS	NOMINAL PIPE SIZE
NS	NEAR SIDE
NSP	NEW STANDARD PLAN
NTS	NOT TO SCALE

O

Oblr	OBLITERATE
OC	OVERCROSSING
OD	OUTSIDE DIAMETER
OF	OUTSIDE FACE
OG	ORIGINAL GROUND
OGAC	OPEN GRADED ASPHALT CONCRETE
OGFC	OPEN GRADED FRICTION COURSE
OH	OVERHEAD
OHWM	ORDINARY HIGH WATER MARK
O-O	OUT TO OUT
Opp	OPPOSITE
OSD	OVERSIDE DRAIN

P

P	PAGE
PAP	PERFORATED ALUMINUM PIPE
PB	PULL BOX
PC	POINT OF CURVATURE,
	PRECAST
PCC	POINT OF COMPOUND CURVE,
	PORTLAND CEMENT CONCRETE
PCMS	PORTABLE CHANGEABLE MESSAGE SIGN
PCP	PERFORATED CONCRETE PIPE,
	PRESTRESSED CONCRETE PIPE
PCVC	POINT OF COMPOUND VERTICAL CURVE
PEC	PERMIT TO ENTER AND CONSTRUCT
Ped	PEDESTRIAN
Ped OC	PEDESTRIAN OVERCROSSING
Ped UC	PEDESTRIAN UNDERCROSSING
Perm Mtl	PERMEABLE MATERIAL

P continued

PG	PROFILE GRADE
PI	POINT OF INTERSECTION
PJP	PARTIAL JOINT PENETRATION
Pkwy	PARKWAY
ℙ,PL	PLATE
P/L	PROPERTY LINE
PM	POST MILE,
	TIME FROM NOON TO MIDNIGHT
PN	PAVING NOTCH
POC	POINT OF HORIZONTAL CURVE
POT	POINT OF TANGENT
POVC	POINT OF VERTICAL CURVE
PP	PIPE PILE,
	PLASTIC PIPE,
	POWER POLE
PPL	PREFORMED PERMEABLE LINER
PPP	PERFORATED PLASTIC PIPE
PRC	POINT OF REVERSE CURVE
PRF	PAVEMENT REINFORCING FABRIC
PRVC	POINT OF REVERSE VERTICAL CURVE
PS&E	PLANS, SPECIFICATIONS AND ESTIMATES
PS, P/S	PRESTRESSED
PSP	PERFORATED STEEL PIPE
PT	POINT OF TANGENCY
PVC	POLYVINYL CHLORIDE
Pvmt	PAVEMENT

Q

Qty	QUANTITY

R

R	RADIUS
R & D	REMOVE AND DISPOSE
R & S	REMOVE AND SALVAGE
R/C	RATE OF CHANGE
RCA	REINFORCED CONCRETE ARCH
RCB	REINFORCED CONCRETE BOX
RCP	REINFORCED CONCRETE PIPE
RCPA	REINFORCED CONCRETE PIPE ARCH
Rd	ROAD
Reinf	REINFORCED,
	REINFORCEMENT,
	REINFORCING
Rel	RELOCATE
Repl	REPLACEMENT
Ret	RETAINING
Rev	REVISED, REVISION
Rdwy	ROADWAY
RHMA	RUBBERIZED HOT MIX ASPHALT
Riv	RIVER
RM	ROAD-MIXED
RP	RADIUS POINT,
	REFERENCE POINT
RR	RAILROAD
RSP	ROCK SLOPE PROTECTION,
	REVISED STANDARD PLAN
Rt	RIGHT
Rte	ROUTE
RW	REDWOOD,
	RETAINING WALL
R/W	RIGHT OF WAY
Rwy	RAILWAY

S

S	SOUTH,
	SUPPLEMENT
SAE	STRUCTURE APPROACH EMBANKMENT
Salv	SALVAGE
SAPP	STRUCTURAL ALUMINUM PLATE PIPE
SB	SOUTHBOUND
SC	SAND CUSHION
SCSP	SLOTTED CORRUGATED STEEL PIPE
SD	STORM DRAIN
Sec	SECOND,
	SECTION
Sep	SEPARATION
SG	SUBGRADE
Shld	SHOULDER
Sht	SHEET
Sim	SIMILAR
℄	STATION LINE
SM	SELECTED MATERIAL
Spec	SPECIAL,
	SPECIFICATIONS
SPP	SLOTTED PLASTIC PIPE
SS	SLOPE STAKE
SSBM	STRAP AND SADDLE BRACKET METHOD
SSD	STRUCTURAL SECTION DRAIN
SSPA	STRUCTURAL STEEL PLATE ARCH
SSPP	STRUCTURAL STEEL PLATE PIPE
SSPPA	STRUCTURAL STEEL PLATE PIPE ARCH
SSRP	STEEL SPIRAL RIB PIPE
St	STREET
Sta	STATION
STBB	SINGLE THRIE BEAM BARRIER
Std	STANDARD
Str	STRUCTURE
Surf	SURFACING
SW	SIDEWALK,
	SOUND WALL
Swr	SEWER
Sym	SYMMETRICAL
S4S	SURFACE 4 SIDES

T

T	SEMI-TANGENT
Tan	TANGENT
TBB	THRIE BEAM BARRIER
Tbr	TIMBER
TC	TOP OF CURB
TCB	TRAFFIC CONTROL BOX
TCE	TEMPORARY CONSTRUCTION EASEMENT
Tel	TELEPHONE
Temp	TEMPORARY
TG	TOP OF GRADE
Tot	TOTAL
TP	TELEPHONE POLE
TPB	TREATED PERMEABLE BASE
TPM	TREATED PERMEABLE MATERIAL
Trans	TRANSITION

T continued

TS	TRANSVERSE,
	TRAFFIC SIGNAL,
	TUBULAR STEEL
Typ	TYPICAL

U

UC	UNDERCROSSING
UD	UNDERDRAIN
UG	UNDERGROUND
UON	UNLESS OTHERWISE NOTED
UP	UNDERPASS

V

V	VALVE,
	DESIGN SPEED
Var	VARIABLE,
	VARIES
VC	VERTICAL CURVE
VCP	VITRIFIED CLAY PIPE
Vert	VERTICAL
Via	VIADUCT
Vol	VOLUME

W

W	WEST,
	WIDTH
WB	WESTBOUND
WH	WEEP HOLE
WM	WIRE MESH
WS	WATER SURFACE
WSP	WELDED STEEL PIPE
Wt	WEIGHT
WV	WATER VALVE
WW	WINGWALL
WWLOL	WINGWALL LAYOUT LINE

X

X Sec	CROSS SECTION
Xing	CROSSING

Y

Yr	YEAR
Yrs	YEARS

Dist	COUNTY	ROUTE	POST MILES TOTAL PROJECT	SHEET No.	TOTAL SHEETS
04	Son	12, 101	R16.0, 19.6	42	60

Grace M. Tsushima
REGISTERED CIVIL ENGINEER

July 19, 2013
PLANS APPROVAL DATE

REGISTERED PROFESSIONAL ENGINEER
Grace M. Tsushima
No. C49814
Exp. 9-30-14
CIVIL
STATE OF CALIFORNIA

THE STATE OF CALIFORNIA OR ITS OFFICERS OR AGENTS SHALL NOT BE RESPONSIBLE FOR THE ACCURACY OR COMPLETENESS OF SCANNED COPIES OF THIS PLAN SHEET.

TO ACCOMPANY PLANS DATED 6-17-16

UNIT OF MEASUREMENT SYMBOLS:

Some of the symbols used in the project plan quantity tables and in the Bid Item List are:

TABLE A

SYMBOL USED	DEFINITIONS
ACRE	ACRE
CF	CUBIC FOOT
CY	CUBIC YARD
EA	EACH
GAL	GALLON
LB	POUND
LF	LINEAR FOOT
SQFT	SQUARE FOOT
SQYD	SQUARE YARD
STA	100 FEET
TAB	TABLET
TON	2,000 POUNDS

Some of the symbols used in the plans other than in the project plan quantity tables are:

TABLE B

SYMBOL USED	DEFINITIONS
ksi	KIPS PER SQUARE INCH
ksf	KIPS PER SQUARE FOOT
psi	POUNDS PER SQUARE INCH
psf	POUNDS PER SQUARE FOOT
lb/ft^3, pcf	POUNDS PER CUBIC FOOT
tsf	TONS PER SQUARE FOOT
mph, MPH *	MILES PER HOUR
ø	NOMINAL DIAMETER
oz	OUNCE
lb	POUND
kip	1,000 POUNDS
cal	CALORIE
ft	FOOT OR FEET
gal	GALLON

* For use on a sign panel only

STATE OF CALIFORNIA
DEPARTMENT OF TRANSPORTATION

ABBREVIATIONS (SHEET 2 OF 2)

NO SCALE

RSP A10B DATED JULY 19, 2013 SUPERSEDES STANDARD PLAN A10B DATED MAY 20, 2011 - PAGE 2 OF THE STANDARD PLANS BOOK DATED 2010.

REVISED STANDARD PLAN RSP A10B

2010 REVISED STANDARD PLAN RSP A10B

6-7-13

Dist	COUNTY	ROUTE	POST MILES TOTAL PROJECT	SHEET No.	TOTAL SHEETS
04	Son	12, 101	R16.0, 19.6	43	60

REGISTERED CIVIL ENGINEER

July 19, 2013
PLANS APPROVAL DATE

REGISTERED PROFESSIONAL ENGINEER Michael Janzen No. 44788 Exp. 03-31-14 CIVIL STATE OF CALIFORNIA

THE STATE OF CALIFORNIA OR ITS OFFICERS OR AGENTS SHALL NOT BE RESPONSIBLE FOR THE ACCURACY OR COMPLETENESS OF SCANNED COPIES OF THIS PLAN SHEET.

TO ACCOMPANY PLANS DATED 6-17-16

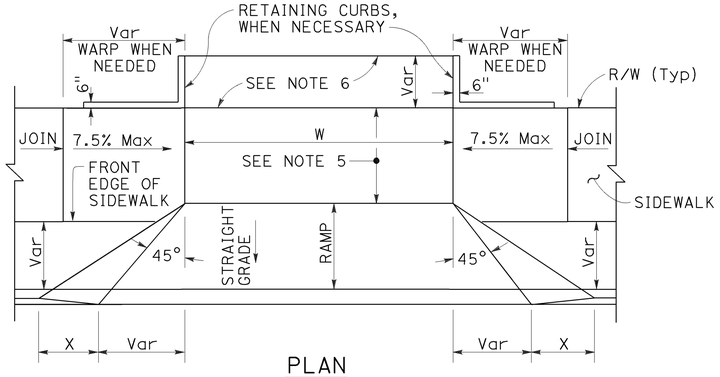

PLAN

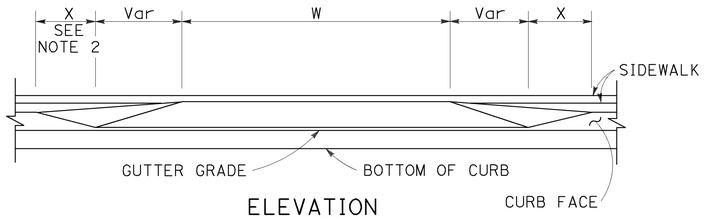

ELEVATION

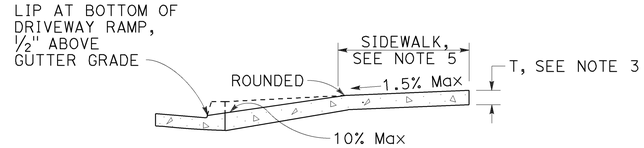

CASE A

Typical driveway, sidewalk not depressed

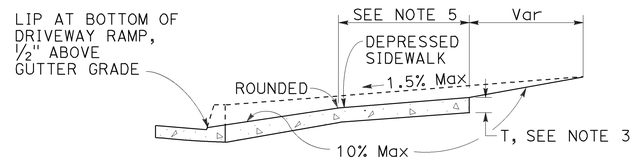

CASE B

Driveway with depressed sidewalk

SECTIONS

DRIVEWAYS

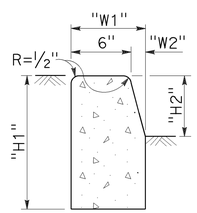

TYPE A1 CURBS

See Table A

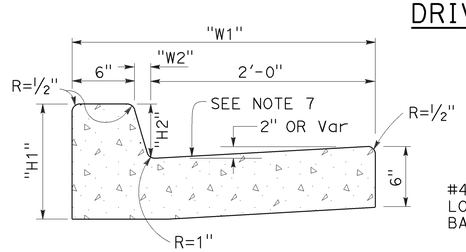

TYPE A2 CURBS

See Table A

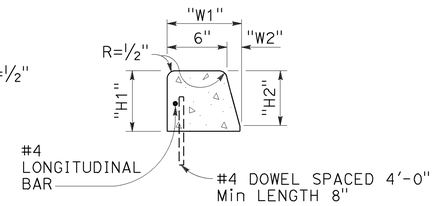

TYPE A3 CURBS

Superimposed on existing pavement
See Table A

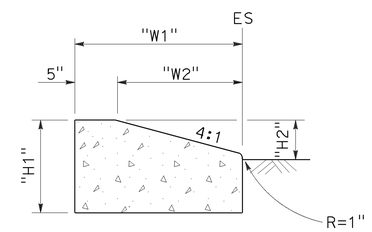

TYPE D CURBS

See Table A

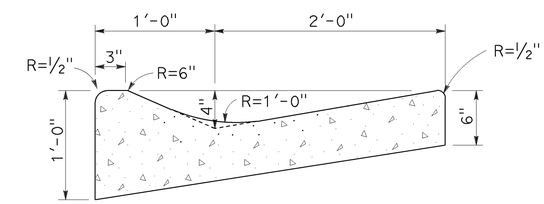

TYPE E CURB

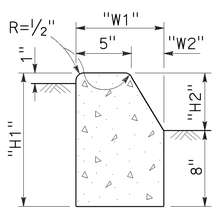

TYPE B1 CURBS

See Table A

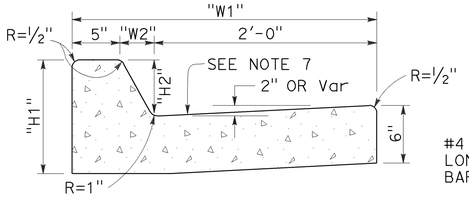

TYPE B2 CURBS

See Table A

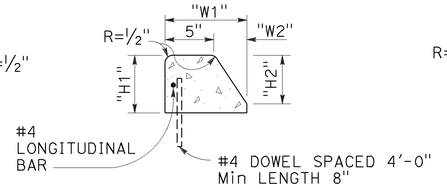

TYPE B3 CURBS

Superimposed on existing pavement
See Table A

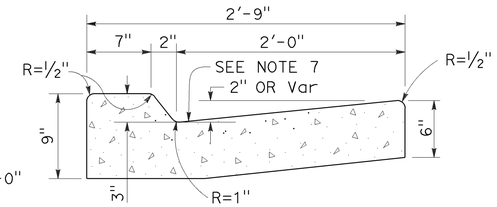

TYPE B4 CURBS

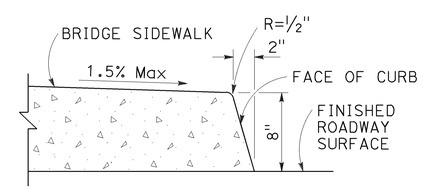

TYPE H CURB

On Bridges

CURBS

TABLE A

CURB TYPE	DIMENSIONS			
	"H1"	"H2"	"W1"	"W2"
A1-6	1'-2"	6"	7½"	1½"
A1-8	1'-4"	8"	8"	2"
A2-6	1'-0"	6"	2'-7½"	1½"
A2-8	1'-2"	8"	2'-8"	2"
A3-6	6"	5"	7¼"	1¼"
A3-8	8"	7"	7¾"	1¾"
B1-4	1'-0"	4"	7½"	2½"
B1-6	1'-2"	6"	9"	4"
B2-4	10"	4"	2'-7½"	2½"
B2-6	1'-0"	6"	2'-9"	4"
B3-4	4"	3"	7"	2"
B3-6	6"	5"	8½"	3½"
D-4	10"	4"	1'-6"	1'-1"
D-6	1'-0"	6"	2'-2"	1'-9"

CURB QUANTITIES

TYPE	CUBIC YARDS PER LINEAR FOOT
A1-6	0.02585
A1-8	0.03084
A2-6	0.05903
A2-8	0.06379
A3-6	0.01036
A3-8	0.01435
B1-4	0.02185
B1-6	0.02930
B2-4	0.05515
B2-6	0.06171
B3-4	0.00641
B3-6	0.01074
B4	0.05709
D-4	0.04083
D-6	0.06804
E	0.06661

NOTES:

1. Case A driveway section typically applies.
2. X=3'-0" except for curb heights over 10" where 4:1 slopes shall be used on curb slope.
3. Sidewalk and ramp thickness "T" at driveway shall be 4" for residental and 6" for commercial.
4. Difference in slope of the driveway ramp and the slope of a line between the gutter and a point on the roadway 5'-0" from gutter line shall not exceed 15%. Reduce driveway ramp slope, not gutter slope, where required.
5. Minimum width of clear passageway for sidewalk shall be 4'-2".
6. Retaining curbs and acquisition of construction easement may be necessary for narrow sidewalks or curb heights in excess of 6".
7. Across the pedestrian route at curb ramp locations, the gutter pan slope shall not exceed 1" of depth for each 2'-0" of width.

STATE OF CALIFORNIA
DEPARTMENT OF TRANSPORTATION

CURBS AND DRIVEWAYS

NO SCALE

RSP A87A DATED JULY 19, 2013 SUPERSEDES STANDARD PLAN A87A
DATED MAY 20, 2011 - PAGE 119 OF THE STANDARD PLANS BOOK DATED 2010.

REVISED STANDARD PLAN RSP A87A

2010 REVISED STANDARD PLAN RSP A87A

7-8-13

Dist	COUNTY	ROUTE	POST MILES TOTAL PROJECT	SHEET No.	TOTAL SHEETS
04	Son	12, 101	R16.0, 19.6	44	60

REGISTERED CIVIL ENGINEER

January 15, 2016
PLANS APPROVAL DATE

REGISTERED PROFESSIONAL ENGINEER
Michael Janzen
No. 44788
Exp. 3-31-16
CIVIL
STATE OF CALIFORNIA

THE STATE OF CALIFORNIA OR ITS OFFICERS OR AGENTS SHALL NOT BE RESPONSIBLE FOR THE ACCURACY OR COMPLETENESS OF SCANNED COPIES OF THIS PLAN SHEET.

TO ACCOMPANY PLANS DATED 6-17-16

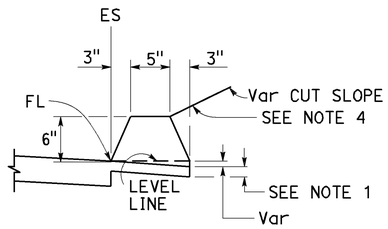

TYPE A
See Notes 3 and 5

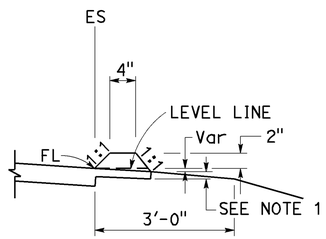

TYPE C

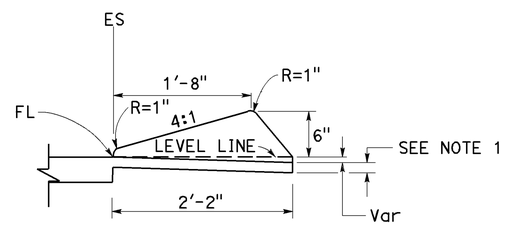

TYPE D

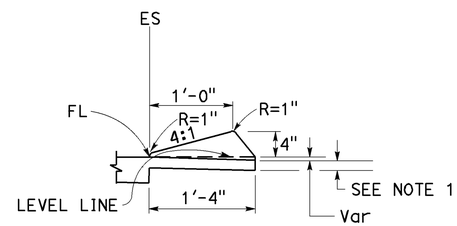

TYPE E

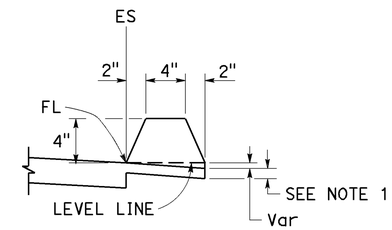

TYPE F
See Note 5

DIKES

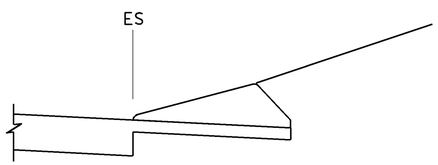

CASE C-1
Cut Slope

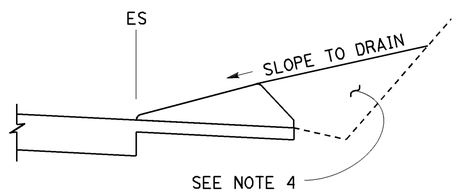

CASE C-2
Cut Slope

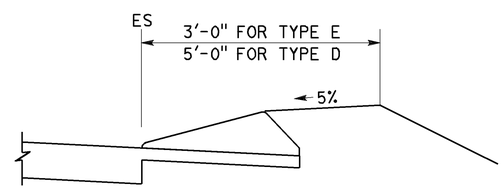

CASE F

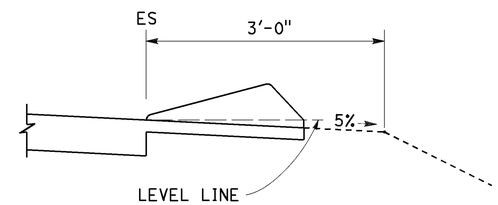

CASE R
See Note 2

TYPE D AND E BACKFILL DETAILS

NOTES:

1. For HMA shoulders only, extend top layer of HMA placed on the shoulder under dike with no joint at the ES. For projects with OGFC shoulders, do not extend OGFC under dike. See project plans for modified dike detail.
2. Case R applies to retrofit only projects where restrictive conditions do not provide enough width for Case F backfill.
3. Type A dike only to be used where restrictive slope conditions do not provide enough width to use Type D or Type E dike.
4. Fill and compact with excavated material to top of dike.
5. Use Type A or F dike, where dike is required with guardrail installations. See Revised Standard Plan RSP A77N4 for dike positioning details. See Revised Standard Plan RSP A77N3 for hinge point offsets with guardrail.

DIKE QUANTITIES

TYPE	CUBIC YARDS PER LINEAR FOOT
A	0.0135
C	0.0038
D	0.0293
E	0.0130
F	0.0066

Quantities based on 5% cross slope.

STATE OF CALIFORNIA
DEPARTMENT OF TRANSPORTATION

HOT MIX ASPHALT DIKES

NO SCALE

RSP A87B DATED JANUARY 15, 2016 SUPERSEDES RSP A87B DATED JULY 19, 2013 AND STANDARD PLAN A87B DATED MAY 20, 2011 - PAGE 120 OF THE STANDARD PLANS BOOK DATED 2010.

REVISED STANDARD PLAN RSP A87B

2010 REVISED STANDARD PLAN RSP A87B

11-17-15

Dist	COUNTY	ROUTE	POST MILES TOTAL PROJECT	SHEET No.	TOTAL SHEETS
04	Son	12, 101	R16.0, 19.6	45	60

REGISTERED CIVIL ENGINEER

July 15, 2016
PLANS APPROVAL DATE

REGISTERED PROFESSIONAL ENGINEER Carl M. Duan No. C59976 Exp. 6-30-18 CIVIL STATE OF CALIFORNIA

THE STATE OF CALIFORNIA OR ITS OFFICERS OR AGENTS SHALL NOT BE RESPONSIBLE FOR THE ACCURACY OR COMPLETENESS OF SCANNED COPIES OF THIS PLAN SHEET.

TO ACCOMPANY PLANS DATED 6-17-16

NOTE:

1. For notes and Table 2, See Revised Standard Plan RSP D72C.

TABLE 1		
	T_1	Vert BARS
L_1 AND L_2 < 2'-10"	9"	#4 @ 12
L_1 OR L_2 > 2'-10"	12"	#5 @ 12

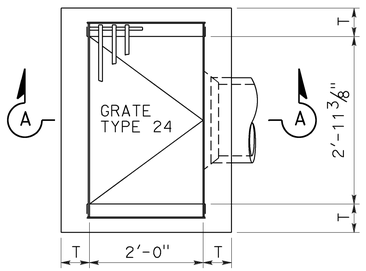

PLAN
TYPE G1

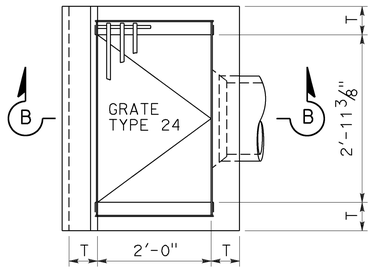

PLAN
TYPE G3

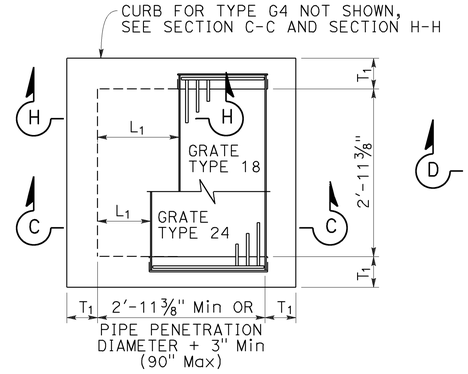

PLAN
STANDARD
TYPE G2 OR G4

FOR "L1", "L2" AND "T1" VALUES, SEE "TABLE 1"

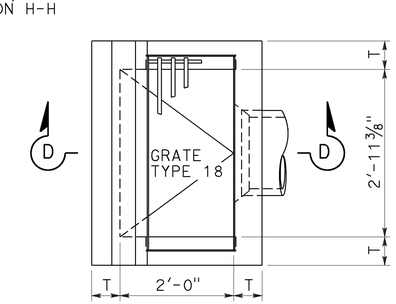

PLAN
TYPE G5

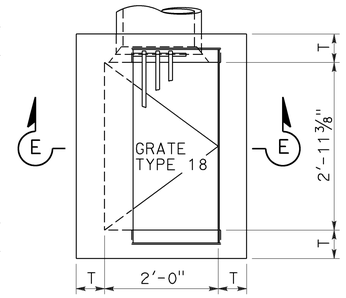

PLAN
TYPE G6

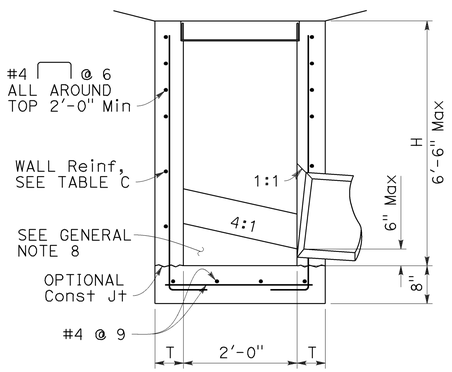

SECTION A-A

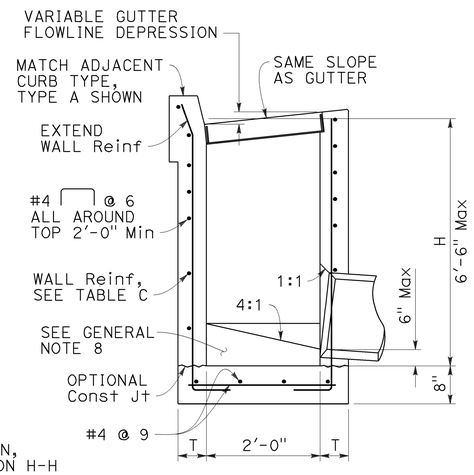

SECTION B-B

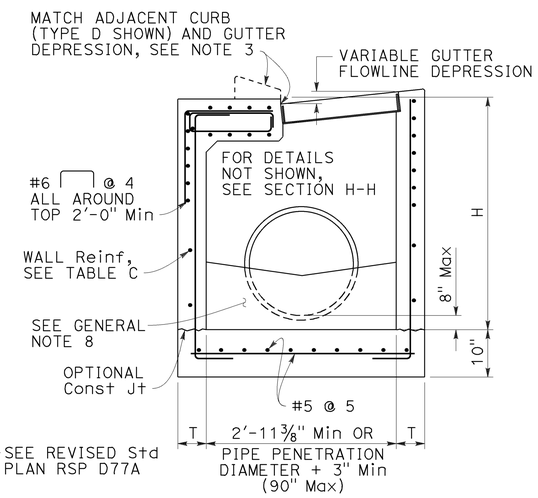

SECTION C-C

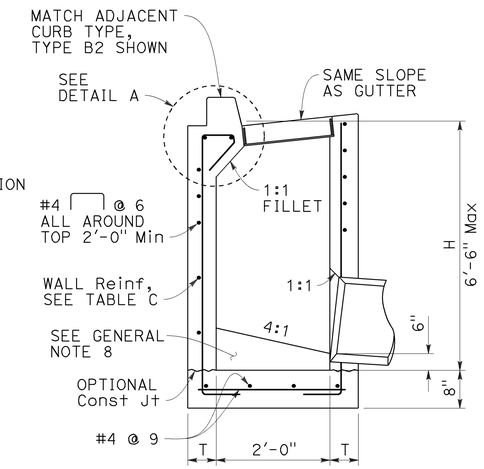

SECTION D-D

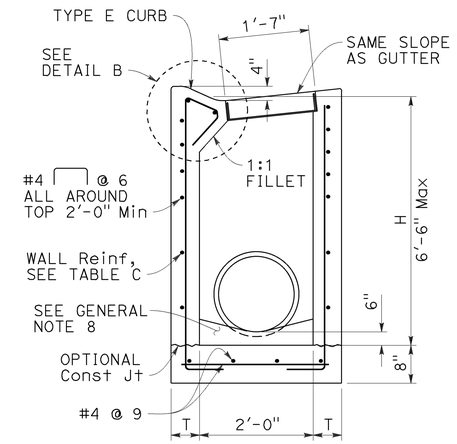

SECTION E-E

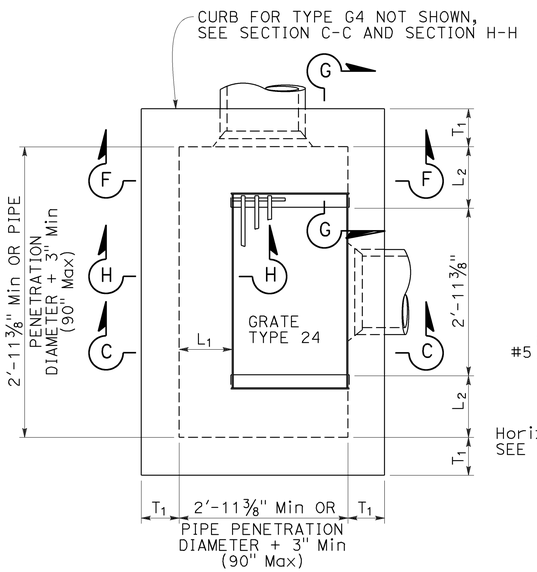

PLAN
EXPANDED
TYPE G2 OR G4

(INTEGRAL TOP ALTERNATIVE)
FOR "L" AND "T" VALUES, SEE TABLE 1

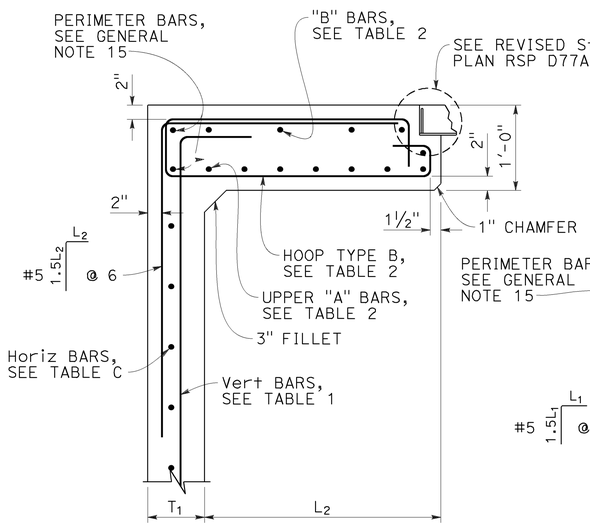

SECTION G-G

FOR "L1", "L2" AND "T1" VALUES, SEE "TABLE 1"

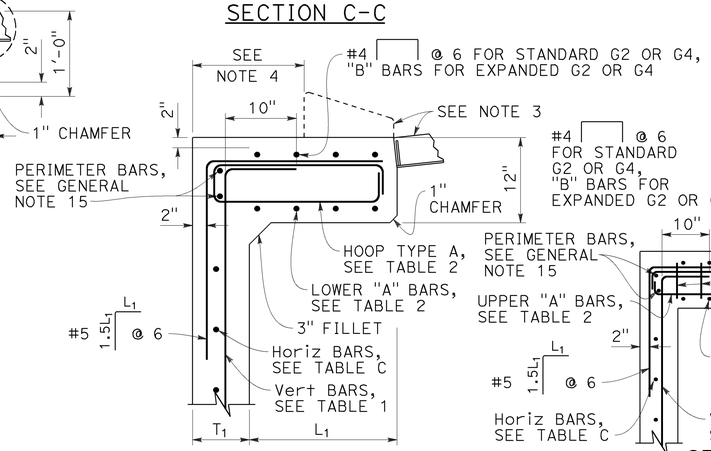

SECTION H-H

FOR "L1", "L2" AND "T1" VALUES, SEE "TABLE 1"

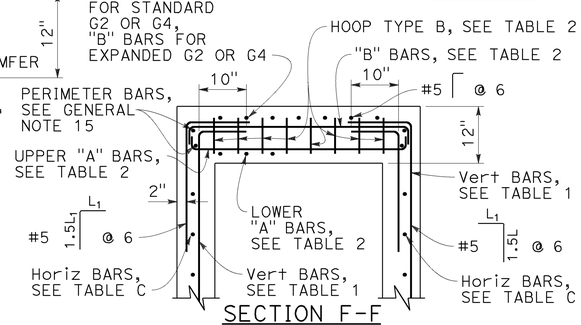

SECTION F-F

FOR "L1", "L2" AND "T1" VALUES, SEE "TABLE 1"

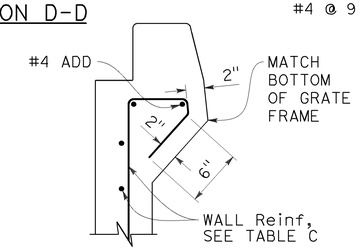

DETAIL A

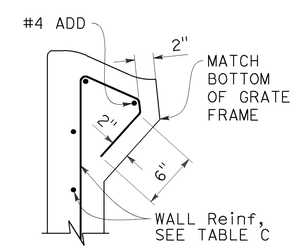

DETAIL B

STATE OF CALIFORNIA
DEPARTMENT OF TRANSPORTATION

CIP DRAINAGE INLETS TYPES G1, G2, G3, G4, G5 AND G6

NO SCALE

RSP D72A DATED JULY 15, 2016 SUPPLEMENTS THE STANDARD PLANS BOOK DATED 2010.

REVISED STANDARD PLAN RSP D72B

2010 REVISED STANDARD PLAN RSP D72B

6-20-16

Dist	COUNTY	ROUTE	POST MILES TOTAL PROJECT	SHEET No.	TOTAL SHEETS
04	Son	12, 101	R16.0, 19.6	46	60

REGISTERED CIVIL ENGINEER

July 15, 2016
PLANS APPROVAL DATE

REGISTERED PROFESSIONAL ENGINEER
Carl M. Duan
No. C59976
Exp. 6-30-18
CIVIL
STATE OF CALIFORNIA

THE STATE OF CALIFORNIA OR ITS OFFICERS OR AGENTS SHALL NOT BE RESPONSIBLE FOR THE ACCURACY OR COMPLETENESS OF SCANNED COPIES OF THIS PLAN SHEET.

TO ACCOMPANY PLANS DATED 6-17-16

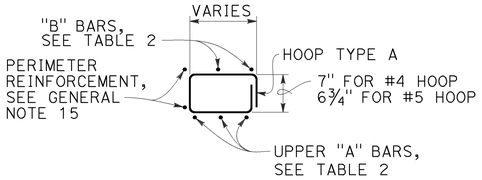

HOOP TYPE A

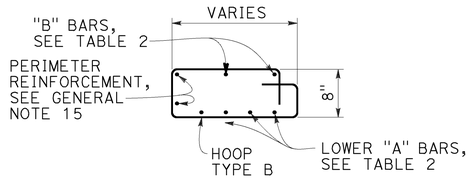

HOOP TYPE B

NOTES:

1. See Revised Standard Plan RSP D72F for General Notes and additional details. See Revised Standard Plan RSP D72G for tables and quantities.
2. Type G4 inlet can use Grate Type 18 or 24. Type G2 inlet uses Grate Type 24.
3. Type G4 inlet details are similar to Type G2 inlet details, except for the addition of a curb and sloped grate to match the adjacent curb and gutter depression.
4. Dimension will vary with different grates, curb types, box width and wall thickness.

TABLE 2 - TOP SLAB REINFORCEMENT

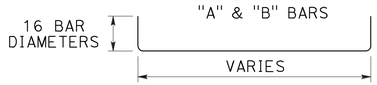

	W/ CURB	W/O CURB
"A" BARS	#4 @ 5 (2 BARS Min)	#5 @ 5 (3 BARS Min)
"B" BARS	#4 @ 10 (2 BARS Min)	#4 @ 12 (2 BARS Min)
HOOPS ("A" & "B")	#4 @ 5	#5 @ 5

ROTATE "A" AND "B" BARS SO HOOKED ENDS WILL MAINTAIN 2" CLEAR COVERAGE.

STATE OF CALIFORNIA
DEPARTMENT OF TRANSPORTATION

CIP DRAINAGE INLETS TYPES G1, G2, G3, G4, G5 AND G6

NO SCALE

RSP D72C DATED JULY 15, 2016 SUPPLEMENTS THE STANDARD PLANS BOOK DATED 2010.

REVISED STANDARD PLAN RSP D72C

2010 REVISED STANDARD PLAN RSP D72C

Dist	COUNTY	ROUTE	POST MILES TOTAL PROJECT	SHEET No.	TOTAL SHEETS
04	Son	12, 101	R16.0, 19.6	47	60

REGISTERED CIVIL ENGINEER

July 15, 2016
PLANS APPROVAL DATE

REGISTERED PROFESSIONAL ENGINEER
Carl M. Duan
No. C59976
Exp. 6-30-18
CIVIL
STATE OF CALIFORNIA

THE STATE OF CALIFORNIA OR ITS OFFICERS OR AGENTS SHALL NOT BE RESPONSIBLE FOR THE ACCURACY OR COMPLETENESS OF SCANNED COPIES OF THIS PLAN SHEET.

TO ACCOMPANY PLANS DATED 6-17-16

GENERAL NOTES:

1. "H" is measured from top of bottom slab to the normal gutter grade line undepressed at the curb face.
2. For "T" wall thickness and reinforcement, see Table C on Revised Standard Plan RSP D72G.
3. Wall reinforcement must be placed in the center of the wall thickness with horizontal bars placed on the exterior face. Bottom slab concrete cover must be 3" clear on the interior face unless otherwise noted. Top slab concrete cover must be 2" clear on the exterior face unless otherwise noted. Reinforcement spacing is in inches unless otherwise noted.
4. Steps - None required where "H" is less than 2'-6". Where "H" is 2'-6" or more, install steps with lowest rung 1'-0" above the floor and highest rung not more than 6" below bottom of lid. The distance between steps must not exceed 1'-0" and be uniform throughout the length of the wall. Place steps in the wall without an opening. Steps inserts may be substituted for the bar steps. Step inserts must comply with State Industrial Safety Requirements. See Revised Standard Plan RSP D74 for step details.
5. Pipe(s) can be placed in any wall. Adjacent to each side of the opening, place additional reinforcement equivalent to half the interupted main reinforcement. For larger pipes greater than or equal to 42" diameter, also add 4 diagonal bars, 1 bar each side. Bars must be the same size as the larger of the main vertical or horizontal bars. Extend bars one development length past the intersection with the adjacent diagonal bar, or where bars intersect mid thickness of adjacent wall bottom or top of non-continuous wall, bend ends as required into same plane.
6. Set inlet so that grate bars are parallel to direction of principal surface flow.
7. Curb section must match adjacent curb.
8. Except for inlets used as junction boxes, basin floors must have wood trowel finish and a minimum slope of 4:1, unless otherwise noted, from all directions toward outlet pipe by casting grout fill on top of the bottom slab. The additional volume to achieve the 4:1 slope may also be achieved by casting the bottom slab and fill as a composite concrete element.
9. See Revised Standard Plans RSP D77A and RSP D77B for grate and frame details and weights of miscellaneous iron and steel.
10. See Standard Plans D78A and D78B for gutter depression details.
11. See Revised Standard Plans RSP A87A and RSP A87B for curb and dike details.
12. Details shown apply to metal, concrete and plastic pipe(s).
13. The Contractor may use WWR instead of bar reinforcement. The ratio of bar reinforcement to WWR shall be based on the yield strength ratio.
14. Cast-in-place (CIP) inlets to be formed around all pipes/stubs intersecting the inlet, and concrete poured in one continuous operation.
15. Perimeter reinforcement must not be smaller than main bars and #4 and serves as a rigid frame to position and attach the required structural reinforcement and may be tack welded at outer corners when using ASTM A706 weldable bars.

DESIGN NOTES:

1. Design Specifications: AASHTO LRFD Bridge Design Specifications, 6th edition with 2012 Interims and Errata and CA Amendments.
2. Live Load (AASHTO LRFD 3.6.1.2):
   HL-93, consists of design truck or tandem, and design lane load.
   Dynamic Load Allowance, IM = 33%
   Multiple Presence Factor, m = 1.0
   Design lane load was excluded in Top Slab design.
   A wheel load of 8 kips without impact factor was used for top slabs that are above a curb.
3. Earth Load:
   Vertical pressure = 140 pcf
   Lateral pressure:
   = 100 pcf for walls with flat embankment
   = 140 pcf For walls with slope embankment, 1.5:1 Max
4. Downdrag: ϕ = 34° and γ_E = 120 pcf.
5. Buoyancy: γ_W = 62.4 pcf to finished grade
6. Reinforced Concrete: f'c = 3.6 ksi, fy = 60.0 ksi.
7. Soil pressures shown are factored per AASHTO LRFD and include self-weight, live load and downdrag.

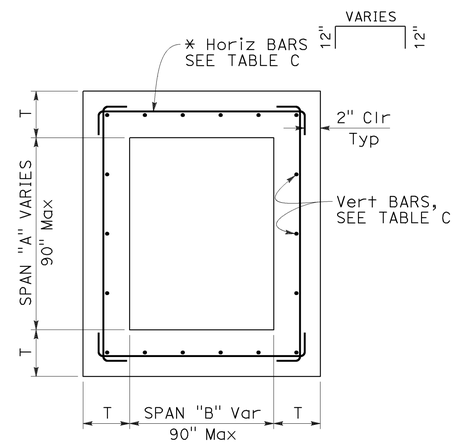

TYPICAL INLET PLAN

* ALTERNATIVE HORIZONTAL BARS

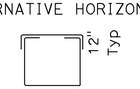

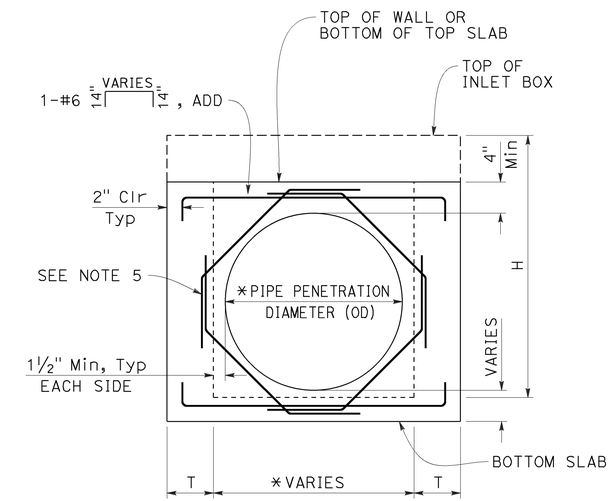

TYPICAL WALL
W/ PIPE OPENING

* SEE "SKEWED PIPE PLAN"

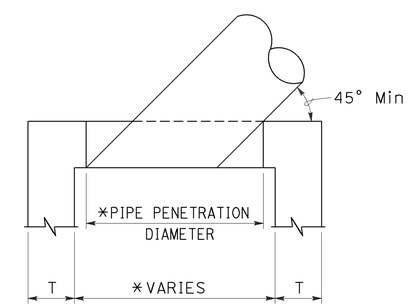

SKEWED PIPE PLAN

* ADJUST PIPE PENETRATION AND BOX WIDTH FOR SKEWED PIPES.

STATE OF CALIFORNIA
DEPARTMENT OF TRANSPORTATION

CIP DRAINAGE INLET NOTES

NO SCALE

RSP D72F DATED JULY 15, 2016 SUPPLEMENTS THE STANDARD PLANS BOOK DATED 2010.

REVISED STANDARD PLAN RSP D72F

2010 REVISED STANDARD PLAN RSP D72F

6-20-16

Dist	COUNTY	ROUTE	POST MILES TOTAL PROJECT	SHEET No.	TOTAL SHEETS
04	Son	12, 101	R16.0, 19.6	48	60

REGISTERED CIVIL ENGINEER

July 15, 2016
PLANS APPROVAL DATE

REGISTERED PROFESSIONAL ENGINEER
Carl M. Duan
No. C59976
Exp. 6-30-18
CIVIL
STATE OF CALIFORNIA

THE STATE OF CALIFORNIA OR ITS OFFICERS OR AGENTS SHALL NOT BE RESPONSIBLE FOR THE ACCURACY OR COMPLETENESS OF SCANNED COPIES OF THIS PLAN SHEET.

TO ACCOMPANY PLANS DATED 6-17-16

2010 REVISED STANDARD PLAN RSP D72G

TABLE A - CONCRETE QUANTITIES

TYPE	H=3'-0" TO 8'-0"		H=8'-1" TO 20'-0"	
	H=3'-0" (CY)	ADDITIONAL CONCRETE PER FOOT (CY)	H=8'-1" (CY)	ADDITIONAL CONCRETE PER FOOT (CY)
G1	0.95	0.220	SEE NOTE 2	SEE NOTE 2
G2*	2.00	0.411	5.11	0.525
G3	1.03	0.220	SEE NOTE 2	SEE NOTE 2
G4 (TYPE 18)*	2.02	0.411	5.14	0.525
G4 (TYPE 24)*	1.99	0.411	5.10	0.525
G5	1.02	0.220	SEE NOTE 2	SEE NOTE 2
G6	1.04	0.220	SEE NOTE 2	SEE NOTE 2
OS	1.53	0.278	5.08	0.504
OL7	2.06	0.278	6.17	0.566
OL10	2.85	0.278	6.85	0.566
OL14	3.81	0.278	7.78	0.566
OL21	5.71	0.278	9.62	0.566
GOL7	2.48	0.313	6.89	0.630
GOL10	3.41	0.313	7.85	0.630
GT1	1.72	0.248	SEE NOTE 2	SEE NOTE 2
GT2	2.93	0.530	7.73	0.762
GT3	1.74	0.348	SEE NOTE 2	SEE NOTE 2
GT4	2.83	0.530	7.62	0.762
GO	1.26	0.245	4.90	0.506
GDO	1.74	0.322	6.33	0.647

* Quantities are based on the minimum interior dimensions.

TABLE B - REINFORCEMENT QUANTITIES

TYPE	H=3'-0" TO 8'-0"		H=8'-1" TO 20'-0"	
	H=3'-0" (LB)	ADDITIONAL REINFORCEMENT PER FOOT (LB)	H=8'-1" (LB)	ADDITIONAL REINFORCEMENT PER FOOT (LB)
G1	118	22.20	SEE NOTE 2	SEE NOTE 2
G2*	729	86.48	1794	171.79
G3	118	22.20	SEE NOTE 2	SEE NOTE 2
G4 (TYPE 18)*	647	86.48	1675	171.79
G4 (TYPE 24)*	647	86.48	1675	171.79
G5	118	22.20	SEE NOTE 2	SEE NOTE 2
G6	118	22.20	SEE NOTE 2	SEE NOTE 2
OS	245	49.88	1057	120.77
OL7	458	50.53	1324	126.75
OL10	729	50.53	1595	126.75
OL14	982	50.53	1849	126.75
OL21	1453	50.53	2320	126.75
GOL7	644	83.57	1969	148.79
GOL10	883	83.57	2208	148.79
GT1	486	96.91	SEE NOTE 2	SEE NOTE 2
GT2	1040	117.08	2543	233.37
GT3	486	96.91	SEE NOTE 2	SEE NOTE 2
GT4	1001	117.08	2556	237.88
GO	308	32.44	1013	96.56
GDO	519	57.09	1654	165.66

* Quantities are based on the minimum interior dimensions.

TABLE D

INLET	CURB USED IN QUANTITIES
G1	-
G2	-
G3	A1-6
G4 (Type 18)	A1-6
G4 (Type 24)	A1-6
G5	B1-4
G6	½E
OS	-
OL7	-
OL10	-
OL14	-
OL21	-
GOL7	-
GOL10	-
GT1	D-6
GT2	E
GT3	A2-8
GT4	A2-8
GO	-
GDO	-

TABLE C - WALL REINFORCEMENT

TYPE	H≤8 (T=6",UON)		8<H≤20 (T=11",UON)	
	HORIZ	VERTICAL	HORIZ	VERTICAL
OS	#4 @ 8	#4 @ 6	#5 @ 6	#6 @ 4.5
OL	#4 @ 6	#4 @ 6	#5 @ 6	#6 @ 4.5
GOL	#5 @ 6	#5 @ 8	#6 @ 5	#6 @ 4.5
G1 (H≤6-6")	#3 @ 6	#3 @ 6	-	-
G2	T=9" #5 @ 5	#5 @ 5	T=11" #6 @ 4	#6 @ 4.5
G3 (H≤6-6")	#3 @ 6	#3 @ 6	-	-
G4	T=9" #5 @ 5	#5 @ 5	T=11" #6 @ 4	#6 @ 4.5
G5 (H≤6-6")	#3 @ 6	#3 @ 6	-	-
G6 (H≤6-6")	#3 @ 6	#3 @ 6	-	-
GT1 (H≤6-6")	#5 @ 6	#5 @ 6	-	-
GT2	T=8" #5 @ 6	#5 @ 6	#6 @ 4	#6 @ 4.5
GT3 (H≤6-6")	#5 @ 6	#5 @ 6	-	-
GT4	T=8" #5 @ 6	#5 @ 6	#6 @ 4	#6 @ 4.5
GO	#4 @ 9	#4 @ 6	#4 @ 6	#6 @ 4.5
GDO	#4 @ 6	#4 @ 6	#5 @ 4	#6 @ 4.5

TABLE E

SOIL PRESSURE BELOW BASE SLAB (ksf)		
TYPE	H=8'-0"	8'-0"< H ≤20'-0"
OS	2.93	5.56
OL*	2.93	5.56
GOL*	2.50	5.06
G1	3.67	-
G2	2.99	5.91
G3	3.67	-
G4	2.99	5.91
G5	3.67	-
G6	3.67	-
GT1	3.66	-
GT2	3.91	6.07
GT3	3.86	-
GT4	3.91	6.07
GO	3.42	6.11
GDO	2.52	6.95

* Main Box

NOTES:

1. No deduction or adjustment was made to the quantities of concrete and reinforcement for pipe openings, floor alternatives or curb type.
2. Maximum allowable height is 6'-6".
3. Quantities are approximate and for design purposes only.
4. Design is based on envelope of level and sloped ground.

STATE OF CALIFORNIA
DEPARTMENT OF TRANSPORTATION

CIP DRAINAGE INLET TABLES

NO SCALE

RSP D72G DATED JULY 15, 2016 SUPPLEMENTS THE STANDARD PLANS BOOK DATED 2010.

REVISED STANDARD PLAN RSP D72G

6-20-16

Dist	COUNTY	ROUTE	POST MILES TOTAL PROJECT	SHEET No.	TOTAL SHEETS
04	Son	12, 101	R16.0, 19.6	49	60

REGISTERED CIVIL ENGINEER

July 15, 2016
PLANS APPROVAL DATE

REGISTERED PROFESSIONAL ENGINEER Carl M. Duan No. C59976 Exp. 6-30-18 CIVIL STATE OF CALIFORNIA

THE STATE OF CALIFORNIA OR ITS OFFICERS OR AGENTS SHALL NOT BE RESPONSIBLE FOR THE ACCURACY OR COMPLETENESS OF SCANNED COPIES OF THIS PLAN SHEET.

TO ACCOMPANY PLANS DATED 6-17-16

NOTE:

1. For notes and Table 2, See Revised Standard Plan RSP D73C.

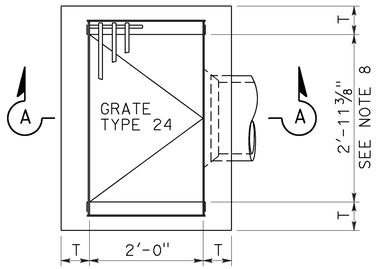

PLAN
TYPE G1

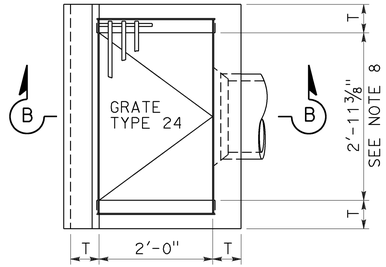

PLAN
TYPE G3

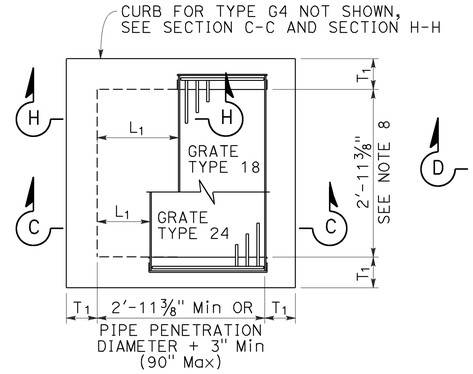

PLAN
STANDARD TYPE G2 OR G4
(INTEGRAL TOP ALTERNATIVE)
FOR "L" AND "T" VALUES, SEE TABLE 1

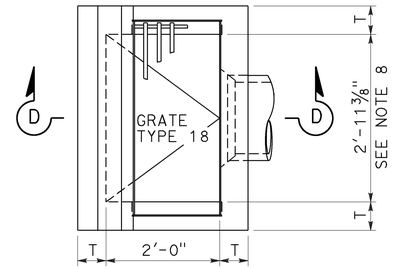

PLAN
TYPE G5

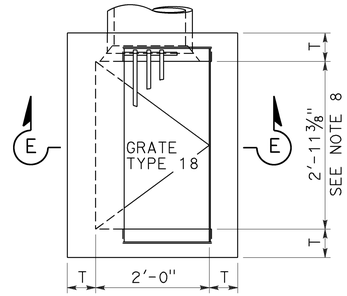

PLAN
TYPE G6

TABLE 1		
	T_1	Vert BARS
L_1 AND L_2 < 2'-10"	8"	#4 @ 12
L_1 OR L_2 > 2'-10"	12"	#5 @ 12

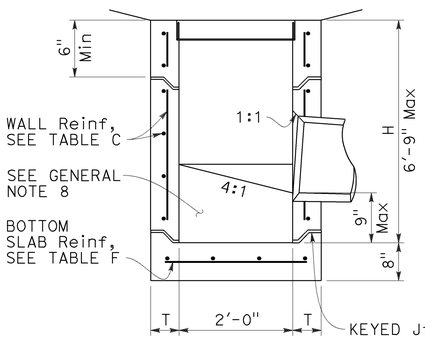

SECTION A-A

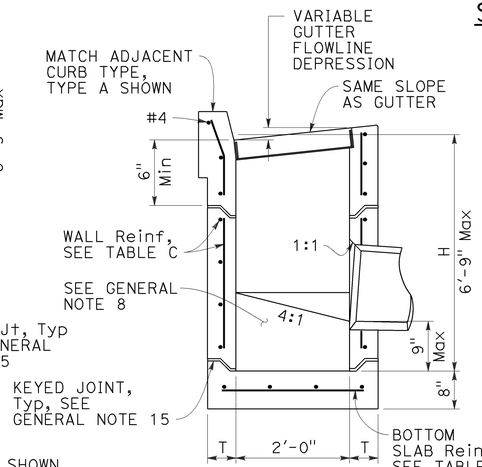

SECTION B-B

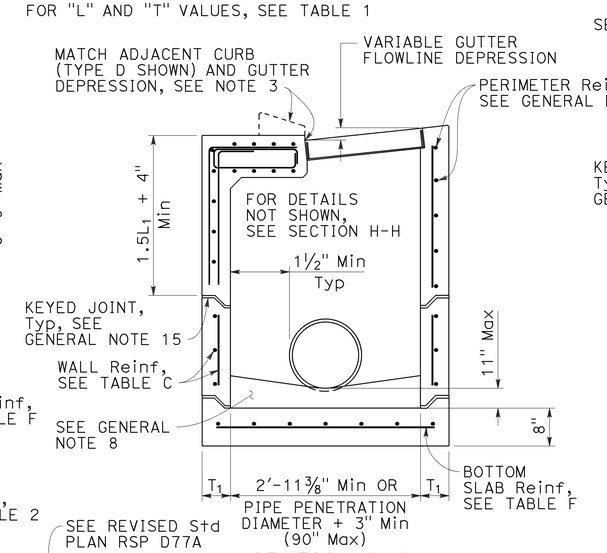

SECTION C-C
FOR "L_1", "L_2" AND "T_1" VALUES, SEE "TABLE 1"

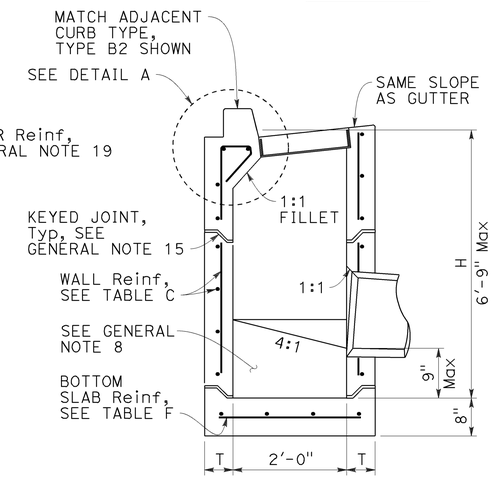

SECTION D-D

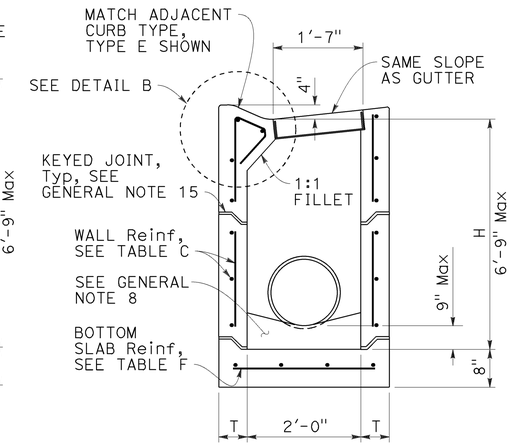

SECTION E-E

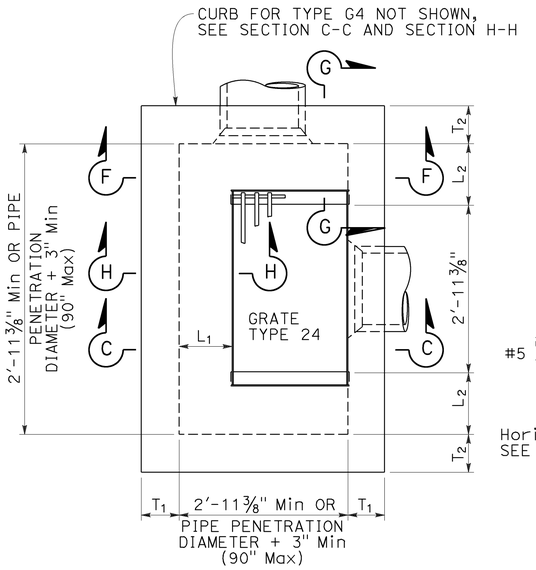

PLAN
EXPANDED
TYPE G2 OR G4
(INTEGRAL TOP ALTERNATIVE)
FOR "L_1", "L_2" AND "T_1" VALUES, SEE "TABLE 1"

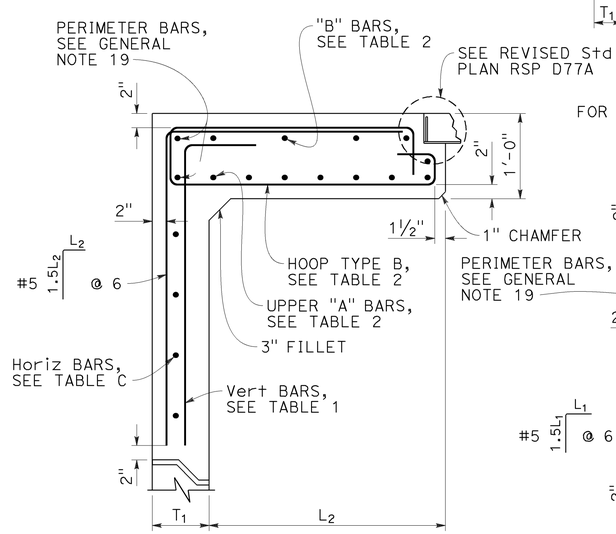

SECTION G-G
FOR "L_1", "L_2" AND "T_1" VALUES, SEE "TABLE 1"

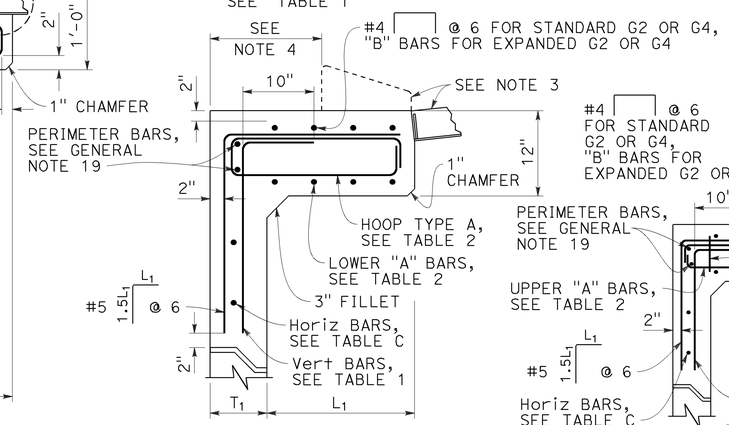

SECTION H-H
FOR "L_1", "L_2" AND "T_1" VALUES, SEE "TABLE 1"

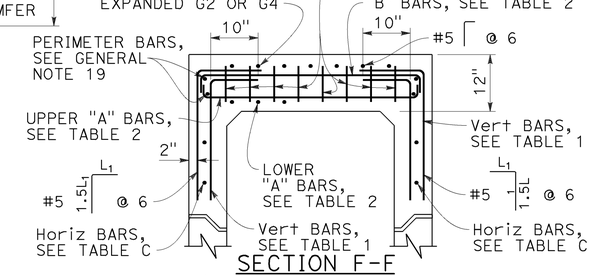

SECTION F-F
FOR "L_1", "L_2" AND "T_1" VALUES, SEE "TABLE 1"

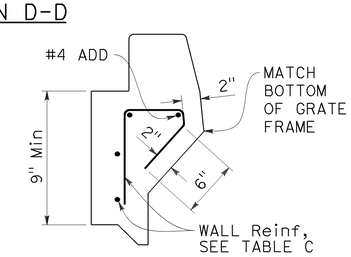

DETAIL A

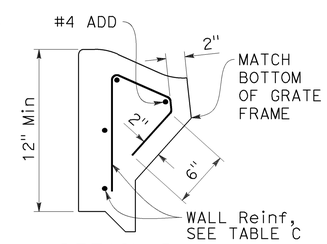

DETAIL B

STATE OF CALIFORNIA
DEPARTMENT OF TRANSPORTATION

PRECAST DRAINAGE INLETS TYPES G1, G2, G3, G4, G5 AND G6

NO SCALE

RSP D73B DATED JULY 15, 2016 SUPPLEMENTS THE STANDARD PLANS BOOK DATED 2010.

REVISED STANDARD PLAN RSP D73B

2010 REVISED STANDARD PLAN RSP D73B

6-29-16

Dist	COUNTY	ROUTE	POST MILES TOTAL PROJECT	SHEET No.	TOTAL SHEETS
04	Son	12, 101	R16.0, 19.6	50	60

REGISTERED CIVIL ENGINEER

July 15, 2016
PLANS APPROVAL DATE

REGISTERED PROFESSIONAL ENGINEER Carl M. Duan No. C59976 Exp. 6-30-18 CIVIL STATE OF CALIFORNIA

THE STATE OF CALIFORNIA OR ITS OFFICERS OR AGENTS SHALL NOT BE RESPONSIBLE FOR THE ACCURACY OR COMPLETENESS OF SCANNED COPIES OF THIS PLAN SHEET.

TO ACCOMPANY PLANS DATED 6-17-16

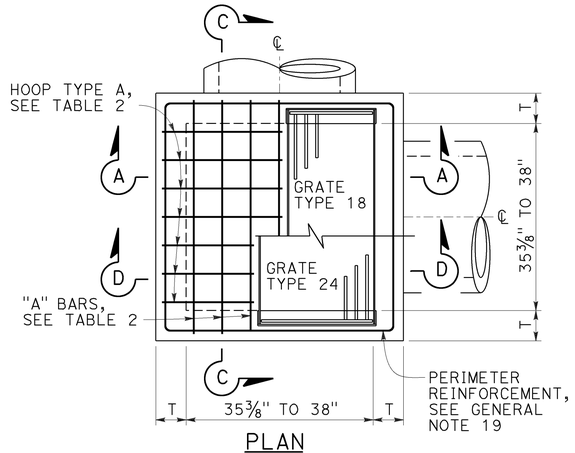

PLAN

STANDARD TYPE G2 OR G4

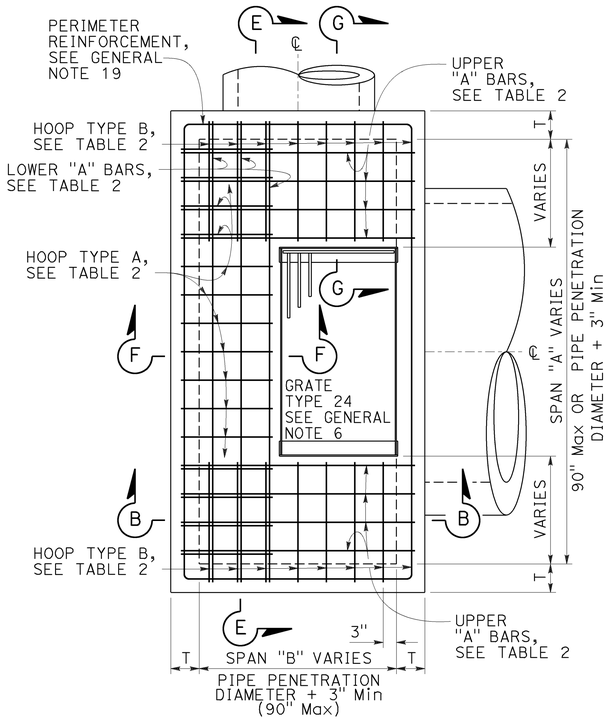

PLAN
EXPANDED
TYPE G2 OR G4
(TOP REBAR NOT SHOWN)

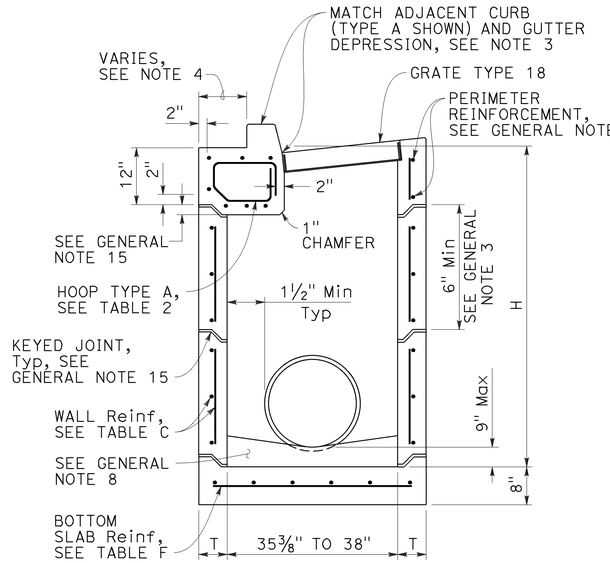

SECTION A-A
(WITH G4 TOP)

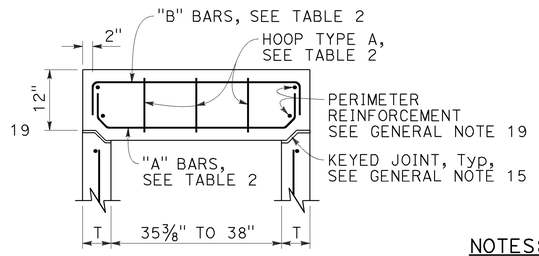

SECTION C-C

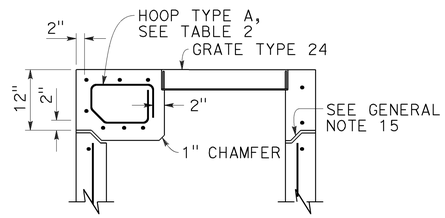

SECTION D-D
(WITH G2 TOP)

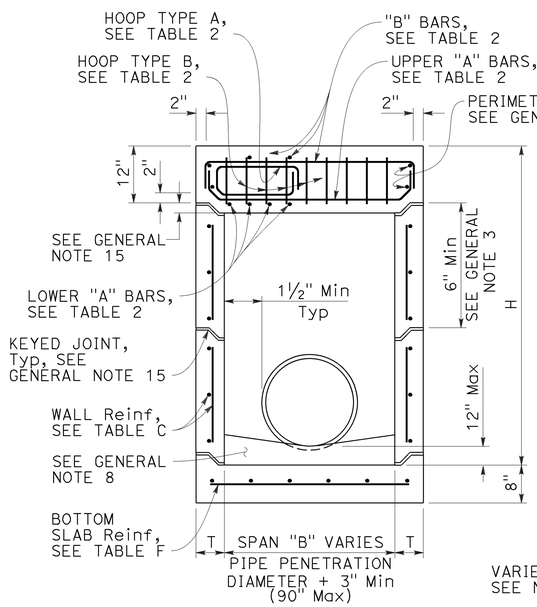

SECTION B-B
(WITH G2 TOP)

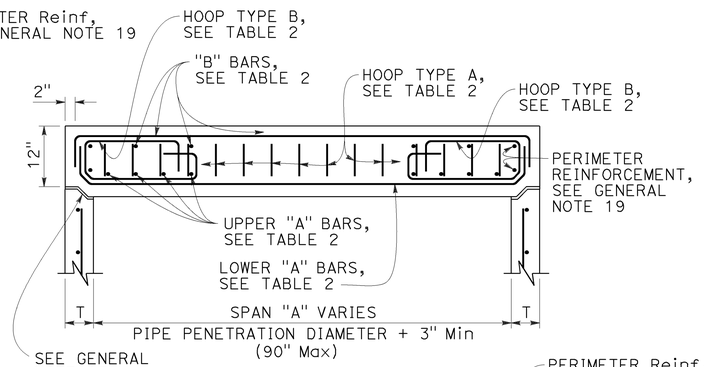

SECTION E-E

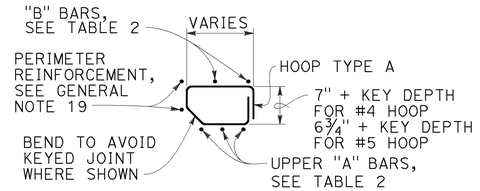

HOOP TYPE A

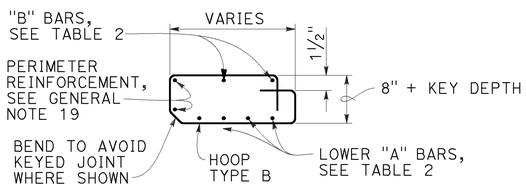

HOOP TYPE B

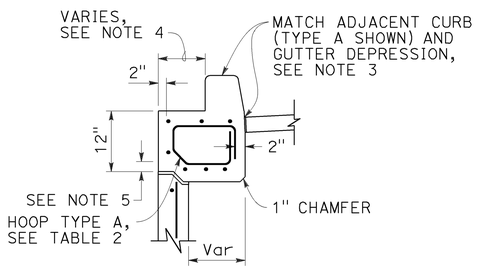

SECTION F-F
(WITH G4 TOP)

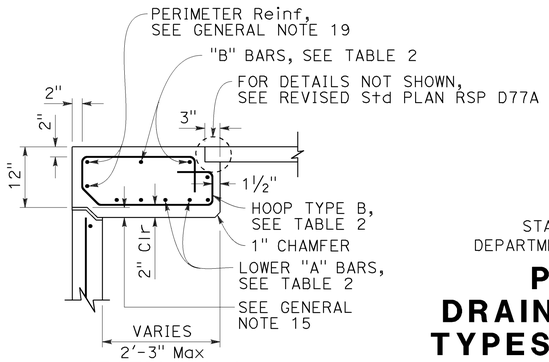

SECTION G-G

NOTES:

1. See Revised Standard Plan RSP D73F for General Notes and additional details. See Revised Standard Plan RSP D73G for additional tables, wall thickness "T" and quantities.
2. Type G4 inlet can use Grate Type 18 or 24. Type G2 inlet uses Grate Type 24.
3. G4 inlet details are the same as the G2 with the addition of a curb and sloped grate that matches the adjacent curb and gutter depression.
4. Dimension will vary with different grates, curb types, box width and wall thickness.
5. 2" unless inlet is expanded in the Span "A" direction, then clearance is 2" plus the diameter of the lower "A" bar.
6. See Revised Standard Plan RSP D73B for integral top slab alternative.
7. Interior dimension of lower sections of inlet may be 3'-0" provided top section conforms to the requirements for frame and grate types on Revised Standard Plan RSP D77A. The wall thickness of top sections may transition from "T" to "T"+5/16" to meet this requirement. Minimum height of thickened wall shall = "T".

TABLE 2 - TOP SLAB REINFORCEMENT

	W/ CURB	W/O CURB
"A" BARS	#4 @ 5 (2 BARS Min)	#5 @ 5 (3 BARS Min)
"B" BARS	#4 @ 10 (2 BARS Min)	#4 @ 10 (2 BARS Min)
HOOPS ("A" & "B")	#4 @ 5	#5 @ 5

ROTATE "A" AND "B" BARS SO HOOKED ENDS WILL MAINTAIN 2" CLEAR COVERAGE.

STATE OF CALIFORNIA
DEPARTMENT OF TRANSPORTATION

PRECAST DRAINAGE INLETS TYPES G2 AND G4

NO SCALE

RSP D73C DATED JULY 15, 2016 SUPPLEMENTS THE STANDARD PLANS BOOK DATED 2010.

REVISED STANDARD PLAN RSP D73C

2010 REVISED STANDARD PLAN RSP D73C

6-29-16

Dist	COUNTY	ROUTE	POST MILES TOTAL PROJECT	SHEET No.	TOTAL SHEETS
04	Son	12, 101	R16.0, 19.6	51	60

REGISTERED CIVIL ENGINEER

July 15, 2016
PLANS APPROVAL DATE

REGISTERED PROFESSIONAL ENGINEER
Carl M. Duan
No. C59976
Exp. 6-30-18
CIVIL
STATE OF CALIFORNIA

THE STATE OF CALIFORNIA OR ITS OFFICERS OR AGENTS SHALL NOT BE RESPONSIBLE FOR THE ACCURACY OR COMPLETENESS OF SCANNED COPIES OF THIS PLAN SHEET.

TO ACCOMPANY PLANS DATED 6-17-16

GENERAL NOTES:

1. "H" is measured from top of bottom slab to the normal gutter grade line undepressed at the curb face.
2. For "T" wall thickness and reinforcement, see Table C on Revised Standard Plan RSP D73G.
3. Wall reinforcement must be placed at the center of wall thickness with horizontal bars placed on the exterior face. Bottom slab concrete cover must be 3" clear on the interior side face unless otherwise noted. Top slab concrete cover must be 2" clear on the exterior face unless otherwise noted. Short independent wall sections or height adjustment rings 6" to 24" high must have a minimum of two #4 horizontal bars. Reinforcement spacing is in inches unless otherwise noted.
4. Steps - None required where "H" is less than 2'-6". Where "H" is 2'-6" or more, install steps with lowest rung 1'-0" above the floor and highest rung not more than 6" below bottom of lid. The distance between steps must not exceed 1'-0" and be uniform throughout the length of the wall. Place steps in the wall without an opening. Steps inserts may be substituted for the bar steps. Step inserts must comply with State Industrial Safety Requirements. See Revised Standard Plan RSP D74 for step details.
5. Pipe(s) can be placed in any wall. Adjacent to each side of the opening, place additional reinforcement equivalent to half the interupted main reinforcement. For larger pipes greater than or equal to 42" diameter, also add 4 diagonal bars, 1 bar each side. Bars must be the same size as the larger of the main vertical or horizontal bars. Extend bars one development length past the intersection with the adjacent diagonal bar, or where bars intersect mid thickness of adjacent wall bottom or top of non-continuous wall, bend ends as required into same plane.
6. Set inlet so that grate bars are parallel to direction of principal surface flow.
7. Curb section must match adjacent curb.
8. Except for inlets used as junction boxes, basin floors must have wood trowel finish and a minimum slope of 4:1, unless otherwise noted, from all directions toward outlet pipe by casting grout on top of the bottom slab. Grout must be placed prior to backfill.
9. See Revised Standard Plans RSP D77A and RSP D77B for grate and frame details and weights of miscellaneous iron and steel.
10. See Standard Plans D78A and D78B for gutter depression details.
11. See Revised Standard Plans RSP A87A and RSP A87B for curb and dike details.
12. Details shown apply to metal, concrete and plastic pipe(s).
13. The Contractor may use WWR instead of bar reinforcement. The ratio of bar reinforcement to WWR shall be based on the yield strength ratio.
14. Seal precast inlets connection openings between wall and pipe with non-shrink grout or resilient connectors as specified in the Special Provisions. Precast inlets shall have mortared connections conforming to details for Type GCP Inlet shown on Revised Standard Plan RSP D75B. See Standard Specifications for mortar composition.
15. Where shown, provide precast inlets with separate top sections for final grade adjustment. Provide keyed joints with butyl rubber sealant between the top section and wall, multiple wall sections, and wall and bottom slab. Joint design may vary but must be 1" to 3" in depth. For tongue type joints, tongue down orientation is not allowed. For keyed joints, keyway up, keyway down or tongue up configurations are allowed. Only one key type is allowed for each drainage inlet.
16. Non-shrink grout can be used for upper most joint to facilitate final top grade adjustment.
17. Provide a level and firm sand bedding on which to place precast inlets. Extend sand bedding under all structure backfill.
18. For Integral Base, see Detail "A".
19. Perimeter reinforcement must not be smaller than main bars and #4 and serves as a rigid frame to position and attach the required structural reinforcement and may be tack welded at outer corners when using ASTM A706 weldable bars.
20. Inlet extensions may be cast in place after placement of main box and placement and compaction of backfill. Concrete strength must be 3.6 ksi minimum. All slab and wall thicknesses must be per Revised Standard Plan RSP D72A. All reinforcement shall extend a minimum of 24" from precast main inlet box.

DESIGN NOTES:

1. Design Specifications: AASHTO LRFD Bridge Design Specifications, 6th edition with 2012 Interims and Errata and CA Amendments.
2. Live Load (AASHTO LRFD 3.6.1.2):
   HL-93, consists of design truck or tandem, and design lane load.
   Dynamic Load Allowance, IM = 33%
   Multiple Presence Factor, m = 1.0
   Design lane load was excluded in Top Slab design.
   A wheel load of 8 kips without impact factor was used for top slabs that are above a curb.
3. Earth Load:
   Vertical pressure = 140 pcf
   Lateral pressure:
   = 100 pcf for walls with flat embankment
   = 140 pcf For walls with slope embankment, 1.5:1 Max
4. Downdrag: ϕ = 34° and γ_E = 120 pcf.
5. Buoyancy: γ_W = 62.4 pcf to finished grade.
6. Reinforced Concrete: f'c = 5.0 ksi, fy = 60.0 ksi.
7. Tables are based on the worst case from the level ground and sloped ground.
8. Soil pressures shown are factored per AASHTO LRFD and include self-weight, live load and downdrag.

SPAN "A" OR "B" (IN)	L (IN)
<38	34
38 TO 50	40
51 TO 64	47
65 TO 76	53
77 TO 90	60

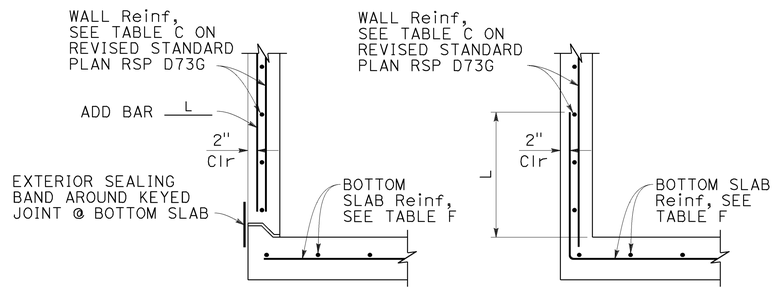

BASE WITH KEYED JOINT INTEGRAL BASE

DETAIL "A"

FOR INTEGRAL BASE, CLEARANCE BETWEEN PIPE PENETRATION AND BASE SLAB MAY BE AS SHOWN IN CIP ALTERNATIVE STANDARD PLAN SHEET.

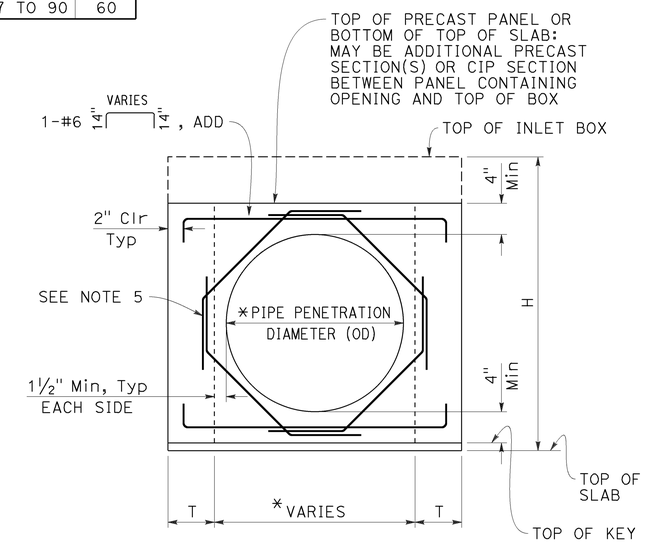

BASE WITH KEYED JOINT

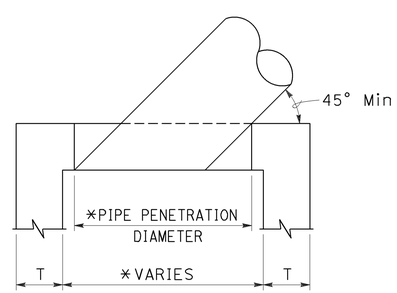

SKEWED PIPE PLAN

* ADJUST PIPE PENETRATION AND BOX WIDTH FOR SKEWED PIPES.

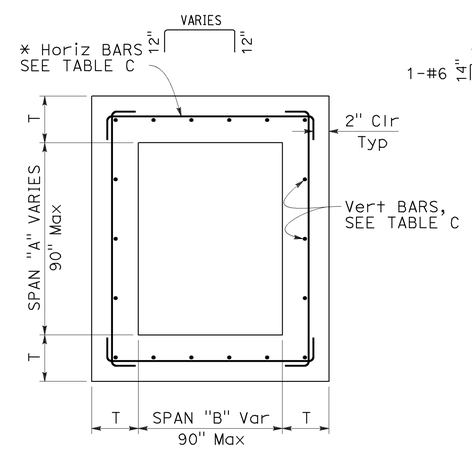

TYPICAL INLET PLAN

* ALTERNATIVE HORIZONTAL BARS

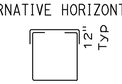

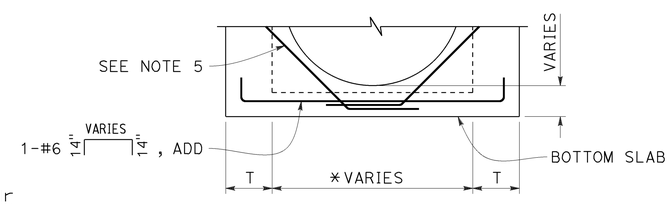

INTEGRAL BASE

FOR DETAILS NOT SHOWN, SEE "BASE WITH KEYED JOINT"

TYPICAL WALL W/ PIPE OPENING

* SEE "SKEWED PIPE PLAN"

STATE OF CALIFORNIA
DEPARTMENT OF TRANSPORTATION

PRECAST DRAINAGE INLET NOTES

NO SCALE

RSP D73F DATED JULY 15, 2016 SUPPLEMENTS THE STANDARD PLANS BOOK DATED 2010.

REVISED STANDARD PLAN RSP D73F

2010 REVISED STANDARD PLAN RSP D73F

6-20-16

Dist	COUNTY	ROUTE	POST MILES TOTAL PROJECT	SHEET No.	TOTAL SHEETS
04	Son	12, 101	R16.0, 19.6	52	60

REGISTERED CIVIL ENGINEER

July 15, 2016
PLANS APPROVAL DATE

REGISTERED PROFESSIONAL ENGINEER
Carl M. Duan
No. C59976
Exp. 6-30-18
CIVIL
STATE OF CALIFORNIA

THE STATE OF CALIFORNIA OR ITS OFFICERS OR AGENTS SHALL NOT BE RESPONSIBLE FOR THE ACCURACY OR COMPLETENESS OF SCANNED COPIES OF THIS PLAN SHEET.

TO ACCOMPANY PLANS DATED 6-17-16

2010 REVISED STANDARD PLAN RSP D73G

TABLE A - CONCRETE QUANTITIES

TYPE	H=3'-0" TO 8'-0"		H=8'-1" TO 20'-0"	
	H=3'-0" (CY)	ADDITIONAL CONCRETE PER FOOT (CY)	H=8'-1" (CY)	ADDITIONAL CONCRETE PER FOOT (CY)
G1	0.95	0.220	SEE NOTE 2	SEE NOTE 2
G2*	1.25	0.255	2.55	0.255
G3	1.06	0.220	SEE NOTE 2	SEE NOTE 2
G4 (TYPE 18)*	1.41	0.255	2.71	0.255
G4 (TYPE 24)*	1.36	0.255	2.65	0.255
G5	1.09	0.220	SEE NOTE 2	SEE NOTE 2
G6	1.14	0.220	SEE NOTE 2	SEE NOTE 2
OS	1.28	0.278	2.69	0.278
OL7	1.92	0.278	3.33	0.278
OL10	2.43	0.278	3.84	0.278
OL14	3.16	0.278	4.57	0.278
OL21	4.58	0.278	5.99	0.278
GOL7	2.36	0.313	4.04	0.434
GOL10	2.84	0.313	4.53	0.434
GT1	2.30	0.480	SEE NOTE 2	SEE NOTE 2
GT2	2.71	0.530	5.40	0.530
GT3	2.29	0.480	SEE NOTE 2	SEE NOTE 2
GT4	2.69	0.530	5.39	0.530
GO	1.25	0.245	2.37	0.245
GDO	1.64	0.322	3.37	0.446

* Quantities are based on the minimum interior dimensions.

TABLE B - REINFORCEMENT QUANTITIES

TYPE	H=3'-0" TO 8'-0"		H=8'-1" TO 20'-0"	
	H=3'-0" (LB)	ADDITIONAL REINFORCEMENT PER FOOT (LB)	H=8'-1" (LB)	ADDITIONAL REINFORCEMENT PER FOOT (LB)
G1	88.5	21.90	SEE NOTE 2	SEE NOTE 2
G2*	151.5	24.54	277.4	38.64
G3	92.9	21.90	SEE NOTE 2	SEE NOTE 2
G4 (TYPE 18)*	134.4	24.54	260.3	38.64
G4 (TYPE 24)*	125.1	24.54	251.0	38.64
G5	92.5	21.90	SEE NOTE 2	SEE NOTE 2
G6	92.5	21.90	SEE NOTE 2	SEE NOTE 2
OS	145.8	35.57	327.8	49.60
OL7	328.0	35.57	510.0	49.60
OL10	467.5	35.57	649.5	49.60
OL14	667.5	35.57	849.5	49.60
OL21	1056.1	35.57	1238.1	49.60
GOL7	474.7	45.17	706.8	74.02
GOL10	604.9	45.17	836.9	74.02
GT1	349.0	80.48	SEE NOTE 2	SEE NOTE 2
GT2	403.7	86.82	849.1	135.15
GT3	347.0	80.48	SEE NOTE 2	SEE NOTE 2
GT4	403.7	86.82	849.1	135.15
GO	99.8	23.75	221.7	37.46
GDO	208.8	46.22	446.2	75.61

* Quantities are based on the minimum interior dimensions.

TABLE D

INLET	CURB USED IN QUANTITIES
G1	-
G2	-
G3	A1-6
G4 (Type 18)	A1-6
G4 (Type 24)	A1-6
G5	B1-4
G6	½E
OS	-
OL7	-
OL10	-
OL14	-
OL21	-
GOL7	-
GOL10	-
GT1	D-6
GT2	E
GT3	A2-8
GT4	A2-8
GO	-
GDO	-

TABLE C - WALL REINFORCEMENT

TYPE	H ≤8'-0" (T=6", UON)			8'-0"< H ≤20'-0" (T=8", UON)		
	HORIZONTAL	VERTICAL	*ADD	HORIZONTAL	VERTICAL	*ADD
OS	#4@6	#3@8	#3@8	#4@4 (T=6")	#3@8	#3@8
OL	#4@6	#3@8	#3@8	#4@4 (T=6")	#3@8	#3@8
GOL	#4@5	#3@8	#3@8	#5@5	#3@6	#3@6
G1 (H ≤6'-9")	#4@9	#3@8	#3@8	-	-	-
G2 & G4 (a** ≤38")	#4@9	#3@8	#3@8	#4@5 (T=6")	#3@8	#3@8
G2 & G4 (38" < a** ≤50")	#4@6	#3@8	#3@8	#4@4 (T=6")	#3@8	#3@8
G2 & G4 (50" < a** ≤64")	#4@5	#3@8	#3@8	#5@5	#3@6	#3@6
G2 & G4 (64"< a** ≤76")	#5@7 (T=8")	#3@6	#3@6	#5@4	#3@6	#5@6
G2 & G4 (76" < a** ≤90")	#5@5 (T=8")	#3@6	#3@6	#5@3	#3@6	#5@6
G3 (H ≤6'-9")	#4@9	#3@8	#3@8	-	-	-
G5 (H ≤6'-9")	#4@9	#3@8	#3@8	-	-	-
G6 (H ≤6'-9")	#4@9	#3@8	#3@8	-	-	-
GT1 (H ≤6'-9")	#5@5 (T=8")	#3@6	#3@6	-	-	-
GT2	#5@5 (T=8")	#3@6	#3@6	#5@3	#3@6	#5@6
GT3 (H ≤6'-9")	#5@5 (T=8")	#3@6	#3@6	-	-	-
GT4	#5@5 (T=8")	#3@6	#3@6	#5@3	#3@6	#5@6
GO	#4@9	#3@8	#3@8	#4@5 (T=6")	#3@8	#3@8
GDO	#4@5	#3@8	#3@8	#5@5	#3@6	#3@6

* See Detail A on Revised Standard Plan RSP D73F for additional vertical bars at the base.
** a = Larger interior span

TABLE E

SOIL PRESSURE BELOW BASE SLAB (ksf)

TYPE	H ≤8'-0"	8'-0"< H ≤20'-0"
OS	2.89	5.68
OL*	2.89	5.68
GOL*	2.36	4.93
G1 (H ≤6'-9")	3.51	-
G2 & G4 (a** ≤38")	2.96	5.79
G2 & G4 (38" < a** ≤50")	2.21	4.51
G2 & G4 (50" < a** ≤64")	3.19	4.89
G2 & G4 (64"< a** ≤76")	2.50	4.23
G2 & G4 (76" < a** ≤90")	2.04	3.56
G3 (H ≤6'-9")	3.51	-
G5 (H ≤6'-9")	3.51	-
G6 (H ≤6'-9")	3.51	-
GT1 (H ≤6'-9")	3.41	-
GT2	3.60	6.42
GT3 (H ≤6'-9")	3.41	-
GT4	3.60	6.42
GO	3.37	6.46
GDO	2.48	7.30

* Main Box
** a = Larger interior span

TABLE F

BASE SLAB REINFORCEMENT (T=8", UON)

TYPE	H ≤8'-0"	8'-0"< H ≤20'-0"
OS	#4@8 (EW)	#4@5 (EW)
OL*	#4@8 (EW)	#4@5 (EW)
GOL*	#4@6 (EW)	#4@4 (EW)
G1 (H ≤6'-9")	#4@10 (EW)	-
G2 & G4 (a** ≤38")	#4@10 (EW)	#4@6 (EW)
G2 & G4 (38" < a** ≤50")	#4@8 (EW)	#4@5 (EW)
G2 & G4 (50" < a** ≤64")	#4@6 (EW)	#4@4 (EW)
G2 & G4 (64"< a** ≤76")	#4@5 (EW)	#4@3 (EW)
G2 & G4 (76" < a** ≤90")	#4@4 (EW)	#5@3 (EW)
G3 (H ≤6'-9")	#4@10 (EW)	-
G5 (H ≤6'-9")	#4@10 (EW)	-
G6 (H ≤6'-9")	#4@10 (EW)	-
GT1 (H ≤6'-9")	#4@4 (EW)	-
GT2	#4@4 (EW)	#5@3 (EW)
GT3 (H ≤6'-9")	#4@4 (EW)	-
GT4	#4@4 (EW)	#5@3 (EW)
GO	#4@10 (EW)	#4@6 (EW)
GDO	#4@6 (EW)	#4@4 (EW)

(EW) Each Way
* Main Box
** a = Larger interior span

NOTES:

1. No deduction or adjustment was made to the quantities of concrete and reinforcement for pipe openings, floor alternatives or curb type.
2. Maximum allowable height is 6'-9".
3. Quantities are approximate and for design purposes only.
4. Design is based on envelope of level and sloped ground.

STATE OF CALIFORNIA
DEPARTMENT OF TRANSPORTATION

PRECAST DRAINAGE INLET TABLES

NO SCALE

RSP D73G DATED JULY 15, 2016 SUPPLEMENTS THE STANDARD PLANS BOOK DATED 2010.

REVISED STANDARD PLAN RSP D73G

Dist	COUNTY	ROUTE	POST MILES TOTAL PROJECT	SHEET No.	TOTAL SHEETS
04	Son	12, 101	R16.0, 19.6	53	60

REGISTERED CIVIL ENGINEER

July 15, 2016
PLANS APPROVAL DATE

REGISTERED PROFESSIONAL ENGINEER Carl M. Duan No. C59976 Exp. 6-30-18 CIVIL STATE OF CALIFORNIA

THE STATE OF CALIFORNIA OR ITS OFFICERS OR AGENTS SHALL NOT BE RESPONSIBLE FOR THE ACCURACY OR COMPLETENESS OF SCANNED COPIES OF THIS PLAN SHEET.

TO ACCOMPANY PLANS DATED 6-17-16

FACE ANGLE DETAIL "A"	
LENGTH OF CURB OPENING	No. OF ANCHORS
3'-6" OR LESS	2
7'-0"	3
10'-0"	4
14'-0"	5
21'-0"	7

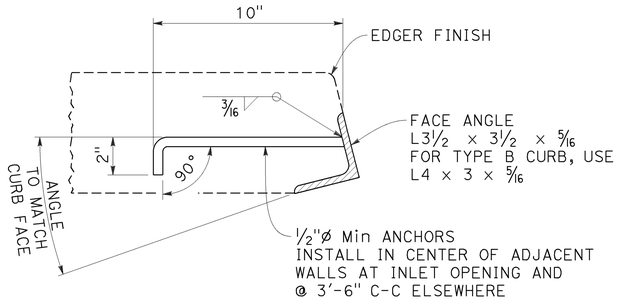

DETAIL "A"

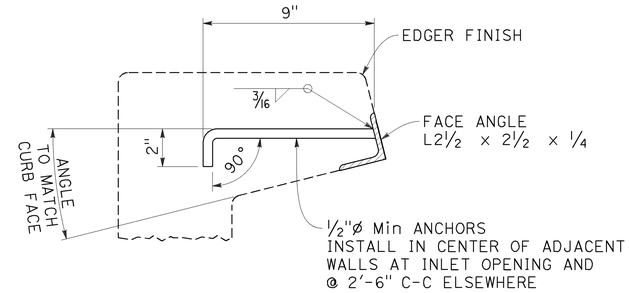

DETAIL "B"

FACE ANGLE AND ANCHOR

NOTE:

1. When shown on the project plans, place a ¾"ø plain round protection bar horizontally across the length of the opening and bend back 4" into the inlet wall on each side.

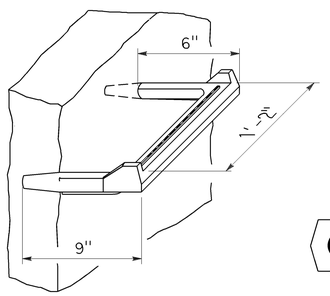

STEP INSERT

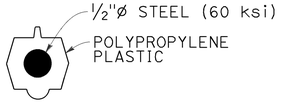

TYPICAL SECTION
(STEP INSERT)

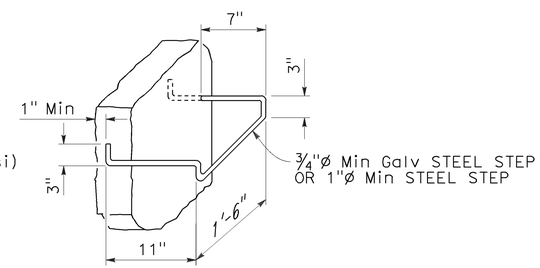

BAR STEP

STEP DETAILS

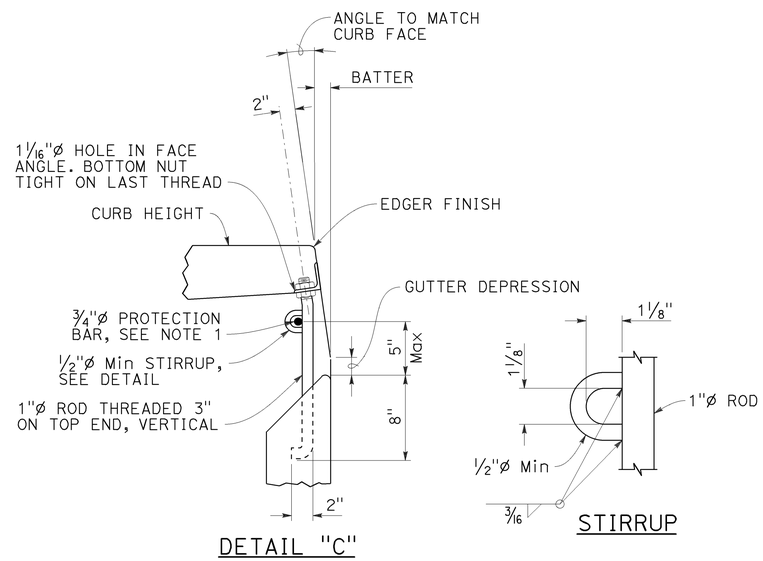

DETAIL "C"

STIRRUP

CURB SUPPORT

CURB SUPPORTS SHALL BE EVENLY SPACED AND MINIMAL IN NUMBER SUCH THAT MAXIMUM SPAN OF UNSUPPORTED CURB IS 7'-0".

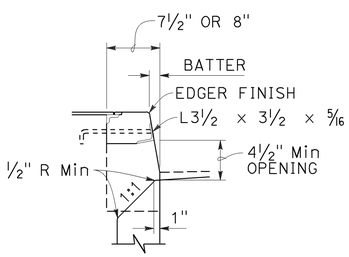

TYPE A CURBS

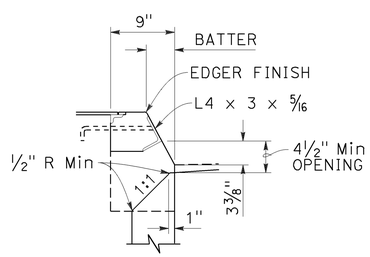

TYPE B CURBS

CURB OPENING DETAILS

STATE OF CALIFORNIA
DEPARTMENT OF TRANSPORTATION

DRAINAGE INLET DETAILS

NO SCALE

RSP D74 DATED JULY 15, 2016 SUPPLEMENTS THE STANDARD PLANS BOOK DATED 2010.

REVISED STANDARD PLAN RSP D74

2010 REVISED STANDARD PLAN RSP D74

6-20-16

Dist	COUNTY	ROUTE	POST MILES TOTAL PROJECT	SHEET No.	TOTAL SHEETS
04	Son	12, 101	R16.0, 19.6	54	60

Raymond Don Tsztoo
REGISTERED CIVIL ENGINEER

April 19, 2013
PLANS APPROVAL DATE

REGISTERED PROFESSIONAL ENGINEER Raymond Don Tsztoo No. C37332 Exp. 6-30-14 CIVIL STATE OF CALIFORNIA

THE STATE OF CALIFORNIA OR ITS OFFICERS OR AGENTS SHALL NOT BE RESPONSIBLE FOR THE ACCURACY OR COMPLETENESS OF SCANNED COPIES OF THIS PLAN SHEET.

TO ACCOMPANY PLANS DATED 6-17-16

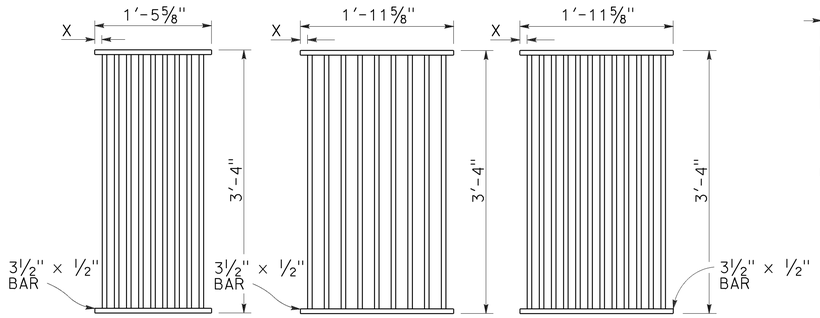

TYPE 18-9

1⅜" Clear spacing. Use within the roadbed on highways where bicycles and pedestrians are excluded.

TYPE 24-9

2" Clear spacing. Use in locations off the roadbed on all types of highways.

TYPE 24-12

1⅜" Clear spacing. Use within the roadbed on highways where bicycles and pedestrians are excluded.

RECTANGULAR GRATE DETAILS

(See table below)

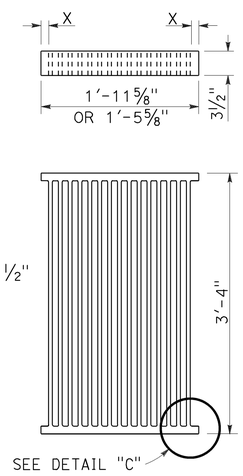

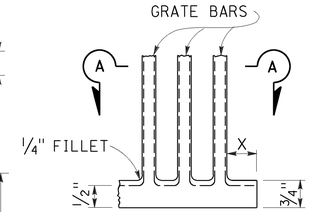

DETAIL "C"

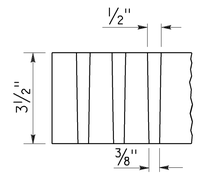

SECTION A-A

ALTERNATIVE CAST DUCTILE IRON GRATE OR CAST CARBON STEEL GRATE

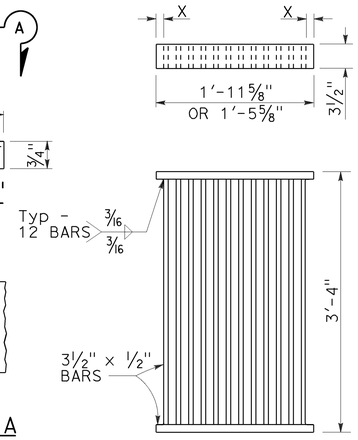

ALTERNATIVE WELDED GRATE

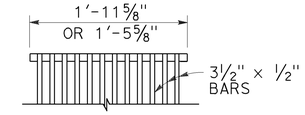

CAST END BLOCK

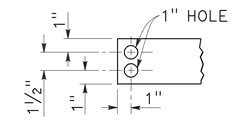

END OF BAR

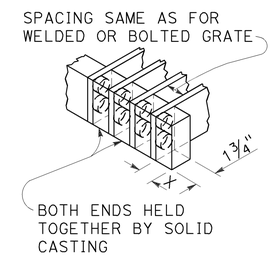

ALTERNATIVE CAST DUCTILE IRON OR CAST CARBON STEEL END BLOCK GRATE

NOTES:

1. Grate type numbers refer to approximate width of grate in inches and number of bars, respectively.
2. Contractor has the option of using cast ductile iron, cast carbon steel, welded, bolted, or cast end block grate.
3. Rounded top of bars optional on all grates.
4. Pipe inlets with a grate shall be placed so that bars parallel direction of principle surface flow.
5. Complete joint penetration butt welds may be substituted for the fillet welds on all anchors.
6. Standard square, hexagon, round or equivalent headed anchors may be substituted for the right angle hooks on the anchors shown on this plan.
7. Grate and frame weights are based on welded grates (weights of face angles, steps, protection bars, etc. are not included).
8. Connect chain to grate and frame only at locations shown on the plans. When chain is required, do not use cast ductile iron grates.

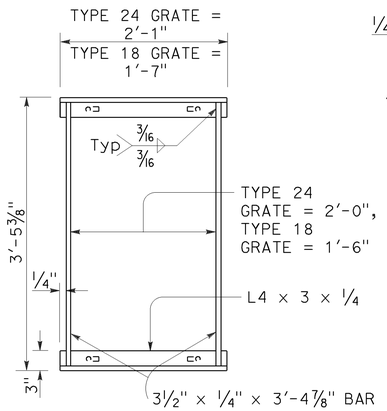

TYPICAL FRAME

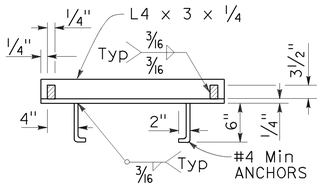

CROSS SECTION

(Thru frame)

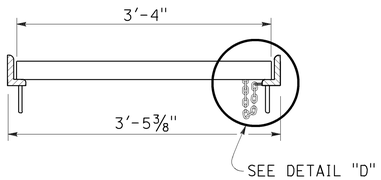

LONGITUDINAL SECTION

(Thru frame and grate)

RECTANGULAR FRAME DETAILS

(For all rectangular grates)

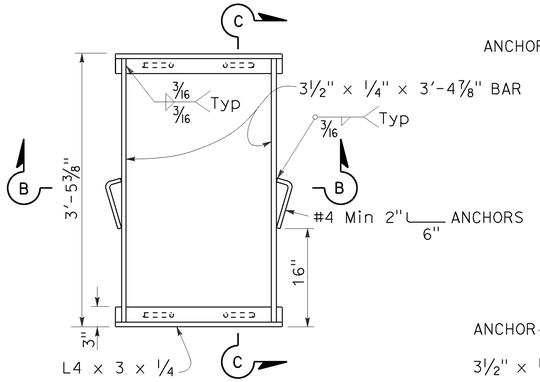

TYPICAL FRAME

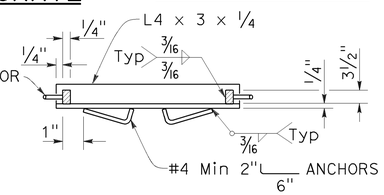

SECTION B-B

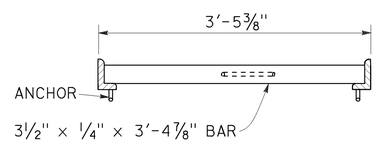

SECTION C-C

ALTERNATIVE ANCHOR FOR RECTANGULAR FRAME

(For details not shown, See Rectangular Frame Details)

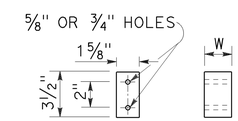

BAR SPACER

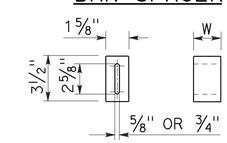

ALTERNATIVE SPACER

W = 1⅜" or 2"

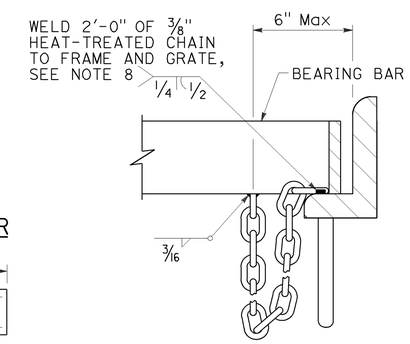

DETAIL "D"

(Steel grates only)

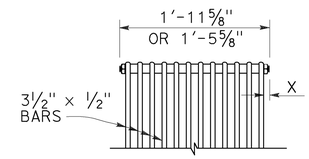

BOLTED END BLOCK

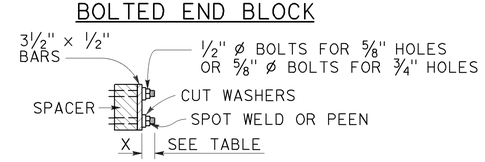

BOLTING DETAIL

ALTERNATIVE BOLTED GRATE

GRATE BAR SPACING TABLE

TYPE	No. OF BARS	CLEAR BAR SPACING	X
18-9	9	1⅜"	1 1/16"
24-9	9	2"	1 9/16"
24-12	12	1⅜"	1¼"

INLET TYPE	COVER TYPE	WEIGHT LB
OS	PLATE	174
OL-7	PLATE	170
OL-10	PLATE	170
OL-14	PLATE	170
OL-21	PLATE	170
OCP	PLATE	112
OCPI	PLATE	112
OCPI	REDWOOD	42
OMP	PLATE	177
OMPI	PLATE	177

INLET TYPE	GRATE TYPE	No. OF GRATES	WEIGHT LB
GDO	24-12	2	634
GOL-7	24-12	1	326
GOL-10	24-12	1	326
GO,G1,G2,G3,G4 (TYPE 24)	24-9	1	263
	24-12	1	326
G4 (TYPE 18),G5,G6	18-9	1	249
GT1	18-9	2	498
GT2	18-9	2	498
GT3	24-12	2	652
GT4	24-12	2	652
TRASH RACK			22
GRATE CHAIN			3

BASIS FOR Misc IRON & STEEL FINAL PAY WEIGHTS FOR DRAINAGE INLETS

(See Note 7)

STATE OF CALIFORNIA
DEPARTMENT OF TRANSPORTATION

GRATE DETAILS No. 1

NO SCALE

RSP D77A DATED APRIL 19, 2013 SUPERSEDES RSP D77A DATED JULY 20, 2012 AND STANDARD PLAN D77A DATED MAY 20, 2011 - PAGE 164 OF THE STANDARD PLANS BOOK DATED 2010.

REVISED STANDARD PLAN RSP D77A

2010 REVISED STANDARD PLAN RSP D77A

4-4-13

Dist	COUNTY	ROUTE	POST MILES TOTAL PROJECT	SHEET No.	TOTAL SHEETS
04	Son	12, 101	R16.0, 19.6	55	60

Gregory A. Balzer
LICENSED LANDSCAPE ARCHITECT

July 19, 2013
PLANS APPROVAL DATE

THE STATE OF CALIFORNIA OR ITS OFFICERS OR AGENTS SHALL NOT BE RESPONSIBLE FOR THE ACCURACY OR COMPLETENESS OF SCANNED COPIES OF THIS PLAN SHEET.

LICENSED LANDSCAPE ARCHITECT — Gregory A. Balzer 2576 — 04 Registration — 2-28-15 Renewal Date — 7-19-13 Date — STATE OF CALIFORNIA

TO ACCOMPANY PLANS DATED 6-17-16

A

AB	AGGREGATE BASE
ABS	ACRYLONITRILE-BUTADIENE-STYRENE
AC	ASPHALT CONCRETE
ACC	ARMOR-CLAD CONDUCTORS
Adj	ADJACENT/ADJUSTABLE
AIC	AUXILIARY IRRIGATION CONTROLLER
Alt	ALTERNATIVE
AMEND	AMENDMENT
ARV	AIR RELEASE VALVE
AUTO	AUTOMATIC
AUX	AUXILIARY
AVB	ATMOSPHERIC VACUUM BREAKER

B

B&B	BALLED AND BURLAPPED
B/B	BRASS/BRONZE
B/B/PL	BRASS/BRONZE/PLASTIC
B/PL	BRASS/PLASTIC
BFM	BONDED FIBER MATRIX
Bit Ctd	BITUMINOUS COATED
BP	BOOSTER PUMP
BPA	BACKFLOW PREVENTER ASSEMBLY
BPE	BACKFLOW PREVENTER ENCLOSURE
BV	BALL VALVE

C

C	CONDUIT
CAP	CORRUGATED ALUMINUM PIPE
CARV	COMBINATION AIR RELEASE VALVE
CB	COUPLING BAND
CCA	CAM COUPLER ASSEMBLY
CEC	CONTROLLER ENCLOSURE CABINET
CHDPE	CORRUGATED HIGH DENSITY POLYETHYLENE
CL	CHAIN LINK
CNC	CONTROL AND NEUTRAL CONDUCTORS
Conc	CONCRETE
CP	COPPER PIPE
CS	COMPOST SOCK
CSP	CORRUGATED STEEL PIPE
CST	CENTER STRIP
CV	CHECK VALVE

D

Dia	DIAMETER
DIP	DUCTILE IRON PIPE
DIT	DRIP IRRIGATION TUBING
DG	DECOMPOSED GRANITE
DN	DIAMETER NOMINAL
DVA	DRIP VALVE ASSEMBLY

E

EC	EROSION CONTROL
ECTC	EROSION CONTROL TECHNOLOGY COUNCIL
Elect	ELECTRIC/ELECTRICAL
Elev	ELEVATION
ELL	ELBOW
ENCL	ENCLOSURE
EP	EDGE OF PAVEMENT
ES	EDGE OF SHOULDER
EST	END STRIP
ESTB	ESTABLISHMENT
ETW	EDGE OF TRAVELED WAY

F

F	FULL CIRCLE
F/P	FULL/PART CIRCLE
FCV	FLOW CONTROL VALVE
FERT	FERTILIZER
FG	FINISHED GRADE
FH	FLEXIBLE HOSE
FIPT	FEMALE IRON PIPE THREAD
FIS	FERTILIZER INJECTOR SYSTEM
FL	FLOW LINE
FR	FIBER ROLL
FS	FLOW SENSOR
FSC	FLOW SENSOR CABLE
FV	FLUSH VALVE

G

Galv	GALVANIZED
GARV	GARDEN VALVE
GARVA	GARDEN VALVE ASSEMBLY
GM	GRAVEL MULCH
GPH	GALLONS PER HOUR
GPM	GALLONS PER MINUTE
GSP	GALVANIZED STEEL PIPE
GV	GATE VALVE

H

H	HALF CIRCLE
HDPE	HIGH DENSITY POLYETHYLENE
HP	HORSEPOWER/HINGE POINT
HPL	HIGH PRESSURE LINE
Hwy	HIGHWAY

I

IC	IRRIGATION CONTROLLER
ICC	IRRIGATION CONTROLLER(S) IN CONTROLLER ENCLOSURE CABINET
ID	INSIDE DIAMETER
IFS	IRRIGATION FILTRATION SYSTEM
IPS	IRON PIPE SIZE
IPT	IRON PIPE THREAD
Irr	IRRIGATION

L

L	LENGTH

M

Max	MAXIMUM
MBGR	METAL BEAM GUARD RAILING
MCV	MANUAL CONTROL VALVE
MIC	MASTER IRRIGATION CONTROLLER
Min	MINIMUM
MIPT	MALE IRON PIPE THREAD
Misc	MISCELLANEOUS
Mtl	MATERIAL
MVP	MAINTENANCE VEHICLE PULLOUT

N

NCN	NO COMMON NAME
NL	NOZZLE LINE
No.	NUMBER
NPT	NATIONAL PIPE THREAD

O

O/C	ON CENTER
OD	OUTSIDE DIAMETER
OL	OVERLAP

P

P	PART CIRCLE
PB	PULL BOX
PCC	PORTLAND CEMENT CONCRETE
PE	POLYETHYLENE
Pkt	PACKET
PL	PLASTIC
PLS	PURE LIVE SEED
PLT	PLANT/PLANTING
PLT ESTB	PLANT ESTABLISHMENT
PM	POST MILE
PR	PRESSURE RATED
PRLV	PRESSURE RELIEF VALVE
PRV	PRESSURE REGULATING VALVE
PVC	POLYVINYL CHLORIDE
Pvmt	PAVEMENT

Q

Q	QUARTER CIRCLE
QCV	QUICK COUPLING VALVE

R

R	RADIUS
RCP	REINFORCED CONCRETE PIPE
RCV	REMOTE CONTROL VALVE
RCVM	REMOTE CONTROL VALVE (MASTER)
RCVMF	REMOTE CONTROL VALVE (MASTER) W/FLOW SENSOR
RCVP	REMOTE CONTROL VALVE W/PRESSURE REGULATOR
RCW	RECYCLED WATER
RECP	ROLLED EROSION CONTROL PRODUCT
REQ	REQUIRED
RICS	REMOTE IRRIGATION CONTROL SYSTEM
R/W	RIGHT OF WAY

S

S	SLIP
SCH	SCHEDULE
SF	STATE-FURNISHED
Shld	SHOULDER
Sq	SQUARE
SST	SIDE STRIP
Sta	STATION
Std	STANDARD
SW	SIDEWALK/SOUND WALL

T

T	THIRD CIRCLE/THREAD
TLS	TRUCK LOADING STANDPIPE
TQ	THREE QUARTER CIRCLE
TRM	TURF REINFORCEMENT MAT
TT	TWO-THIRDS CIRCLE
TWSA	TREE WELL SPRINKLER ASSEMBLY
Typ	TYPICAL

U

UG	UNDERGROUND

W

W	WIDTH
W/	WITH
WM	WATER METER
WS	WYE STRAINER
WSA	WYE STRAINER ASSEMBLY
WSP	WELDED STEEL PIPE
WWM	WELDED WIRE MESH

NOTE:

For additional abbreviations, see Standard Plans A10A and A10B.

STATE OF CALIFORNIA
DEPARTMENT OF TRANSPORTATION

LANDSCAPE AND EROSION CONTROL ABBREVIATIONS

NO SCALE

RSP H1 DATED JULY 19, 2013 SUPERSEDES STANDARD PLAN H1 DATED MAY 20, 2011 - PAGE 218 OF THE STANDARD PLANS BOOK DATED 2010.

REVISED STANDARD PLAN RSP H1

2010 REVISED STANDARD PLAN RSP H1

6-28-13

Dist	COUNTY	ROUTE	POST MILES TOTAL PROJECT	SHEET No.	TOTAL SHEETS
04	Son	12, 101	R16.0, 19.6	56	60

LICENSED LANDSCAPE ARCHITECT

July 15, 2016
PLANS APPROVAL DATE

LICENSED LANDSCAPE ARCHITECT
Michael V. Ferrara 3899
9-30-17
Renewal Date
Date
STATE OF CALIFORNIA

THE STATE OF CALIFORNIA OR ITS OFFICERS OR AGENTS SHALL NOT BE RESPONSIBLE FOR THE ACCURACY OR COMPLETENESS OF SCANNED COPIES OF THIS PLAN SHEET.

TO ACCOMPANY PLANS DATED 6-17-16

EXISTING	NEW	ITEM DESCRIPTION
		WATER METER (WM)
		BACKFLOW PREVENTER ASSEMBLY (BPA)
		BACKFLOW PREVENTER ENCLOSURE (BPE)
		BOOSTER PUMP (BP)
		TRUCK LOADING STANDPIPE (TLS)
	FS	FLOW SENSOR (FS)
X	X	MASTER IRRIGATION CONTROLLER (MIC)
		AUXILIARY IRRIGATION CONTROLLER (AIC)
		IRRIGATION CONTROLLER (IC) IRRIGATION CONTROLLER (IC) (BATTERY) IRRIGATION CONTROLLER (IC) (SOLAR) IRRIGATION CONTROLLER (IC) (TWO WIRE)
		IRRIGATION CONTROLLER(S) IN CONTROLLER ENCLOSURE CABINET (ICC)
acc	ACC	ARMOR-CLAD CONDUCTORS (ACC)
		CONTROL AND NEUTRAL CONDUCTORS (CNC)
		IRRIGATION CONDUIT
		IRRIGATION SLEEVE
dip	DIP	DUCTILE IRON PIPE (SUPPLY LINE) (MAIN) (DIP)
		GALVANIZED STEEL PIPE (SUPPLY LINE) (MAIN) (GSP)
		GALVANIZED STEEL PIPE (SUPPLY LINE) (LATERAL) (GSP)
		PLASTIC PIPE (SUPPLY LINE) (MAIN)
		PLASTIC PIPE (SUPPLY LINE) (LATERAL)
cp	CP	COPPER PIPE (SUPPLY LINE)
dit	DIT	DRIP IRRIGATION TUBING
		REMOTE CONTROL VALVE (RCV) REMOTE CONTROL VALVE (MASTER) (RCVM) REMOTE CONTROL VALVE (MASTER) W/FLOW METER (RCVMF)
P	P	REMOTE CONTROL VALVE W/PRESSURE REGULATOR (RCVP)
		EXISTING MANUAL CONTROL VALVE (MCV)
V	V	DRIP VALVE ASSEMBLY (DVA)
Y	Y	WYE STRAINER ASSEMBLY (WSA)

EXISTING	NEW	ITEM DESCRIPTION
		GATE VALVE (GV)
		BALL VALVE (BV)
		QUICK COUPLING VALVE (QCV)
		CAM COUPLER ASSEMBLY (CCA)
		GARDEN VALVE ASSEMBLY (GARVA)
		PRESSURE REGULATING VALVE (PRV)
		PRESSURE RELIEF VALVE (PRLV)
		FLOW CONTROL VALVE (FCV)
		COMBINATION AIR RELEASE VALVE (CARV)
		CHECK VALVE (CV)
		FLUSH VALVE (FV)
		EXISTING NOZZLE LINE W/TURNING UNION
		EXISTING IRRIGATION SYSTEM
		EXISTING IRRIGATION SYSTEM TO BE REMOVED
		CHAIN LINK GATE
		QUICK COUPLING VALVE W/SPRINKLER PROTECTOR
3	3	SPRINKLER W/SPRINKLER PROTECTOR
	C	CONNECT TO EXISTING SYSTEM
		CAP
		CAP EXISTING
	\\\FR\\\	FIBER ROLL
	\\\CS\\\	COMPOST SOCK

RCV SIZE
IRRIGATION CONTROLLER
CONTROLLER STATION
VALVE IN PARALLEL (IF APPLICABLE)
GPM
QUANTITY OF SPRINKLERS (WHEN SHOWN)

* 2½"-A-2b-40-60

VALVE CODE

* VALVE CODES FOR EXISTING VALVES ARE SHOWN IN A DASHED ENCLOSURE.

STATE OF CALIFORNIA
DEPARTMENT OF TRANSPORTATION

LANDSCAPE AND EROSION CONTROL SYMBOLS

NO SCALE

RSP H2 DATED JULY 15, 2016 SUPERSEDES RSP H2 DATED NOVEMBER 15, 2013 AND RSP H2 DATED JULY 19, 2013 AND STANDARD PLAN H2 DATED MAY 20, 2011 - PAGE 219 OF THE STANDARD PLANS BOOK DATED 2010.

REVISED STANDARD PLAN RSP H2

2010 REVISED STANDARD PLAN RSP H2

5-24-16

Dist	COUNTY	ROUTE	POST MILES TOTAL PROJECT	SHEET No.	TOTAL SHEETS
04	Son	12, 101	R16.0, 19.6	57	60

REGISTERED CIVIL ENGINEER

July 19, 2013
PLANS APPROVAL DATE

REGISTERED PROFESSIONAL ENGINEER
Gurinderpal Bhullar
No. C48815
Exp. 9-30-14
CIVIL
STATE OF CALIFORNIA

THE STATE OF CALIFORNIA OR ITS OFFICERS OR AGENTS SHALL NOT BE RESPONSIBLE FOR THE ACCURACY OR COMPLETENESS OF SCANNED COPIES OF THIS PLAN SHEET.

TO ACCOMPANY PLANS DATED 6-17-16

2010 REVISED STANDARD PLAN RSP T9

TABLE 1

TAPER LENGTH CRITERIA AND CHANNELIZING DEVICE SPACING

SPEED (S)	MINIMUM TAPER LENGTH * FOR WIDTH OF OFFSET 12 FEET (W)				MAXIMUM CHANNELIZING DEVICE SPACING		
					X	Y	Z **
	TANGENT 2L	MERGING L	SHIFTING L/2	SHOULDER L/3	TAPER	TANGENT	CONFLICT
mph	ft	ft	ft	ft	ft	ft	ft
20	160	80	40	27	20	40	10
25	250	125	63	42	25	50	12
30	360	180	90	60	30	60	15
35	490	245	123	82	35	70	17
40	640	320	160	107	40	80	20
45	1080	540	270	180	45	90	22
50	1200	600	300	200	50	100	25
55	1320	660	330	220	55	110	27
60	1440	720	360	240	60	120	30
65	1560	780	390	260	65	130	32
70	1680	840	420	280	70	140	35

* - For other offsets, use the following merging taper length formula for L:
For speed of 40 mph or less, $L = WS^2/60$
For speed of 45 mph or more, $L = WS$

Where: L = Taper length in feet
W = Width of offset in feet
S = Posted speed limit, off-peak 85th-percentile speed prior to work starting, or the anticipated operating speed in mph

** - Use for taper and tangent sections where there are no pavement markings or where there is a conflict between existing pavement markings and channelizers (CA).

TABLE 2

LONGITUDINAL BUFFER SPACE AND FLAGGER STATION SPACING

SPEED *	Min D **	DOWNGRADE Min D ***		
		-3%	-6%	-9%
mph	ft	ft	ft	ft
20	115	116	120	126
25	155	158	165	173
30	200	205	215	227
35	250	257	271	287
40	305	315	333	354
45	360	378	400	427
50	425	446	474	507
55	495	520	553	593
60	570	598	638	686
65	645	682	728	785
70	730	771	825	891

* - Speed is posted speed limit, off-peak 85th-percentile speed prior to work starting, or the anticipated operating speed in mph

** - Longitudinal buffer space or flagger station spacing

*** - Use on sustained downgrade steeper than -3 percent and longer than 1 mile.

TABLE 3

ADVANCE WARNING SIGN SPACING

ROAD TYPE	DISTANCE BETWEEN SIGNS *		
	A	B	C
	ft	ft	ft
URBAN - 25 mph OR LESS	100	100	100
URBAN - MORE THAN 25 mph TO 40 mph	250	250	250
URBAN - MORE THAN 40 mph	350	350	350
RURAL	500	500	500
EXPRESSWAY / FREEWAY	1000	1500	2640

* - The distances are approximate, are intended for guidance purposes only, and should be applied with engineering judgment. These distances should be adjusted by the Engineer for field conditions, if necessary, by increasing or decreasing the recommmended distances.

STATE OF CALIFORNIA
DEPARTMENT OF TRANSPORTATION

TRAFFIC CONTROL SYSTEM TABLES FOR LANE AND RAMP CLOSURES

NO SCALE

RSP T9 DATED JULY 19, 2013 SUPERSEDES RSP T9 DATED APRIL 19, 2013 THAT SUPPLEMENTS THE STANDARD PLANS BOOK DATED 2010.

REVISED STANDARD PLAN RSP T9

TO ACCOMPANY PLANS DATED 6-17-16

Dist	COUNTY	ROUTE	POST MILES TOTAL PROJECT	SHEET No.	TOTAL SHEETS
04	Son	12, 101	R16.0, 19.6	58	60

REGISTERED CIVIL ENGINEER

April 19, 2013
PLANS APPROVAL DATE

REGISTERED PROFESSIONAL ENGINEER Gurinderpal Bhullar No. C48815 Exp. 9-30-14 CIVIL STATE OF CALIFORNIA

THE STATE OF CALIFORNIA OR ITS OFFICERS OR AGENTS SHALL NOT BE RESPONSIBLE FOR THE ACCURACY OR COMPLETENESS OF SCANNED COPIES OF THIS PLAN SHEET.

NOTES:

See Revised Standard Plan RSP T9 for tables.

Use cone spacing X for taper segment, Y for tangent segment or Z for conflict situations, as approriate, per Table 1, unless X, Y, or Z cone spacing is shown on this sheet.

Unless otherwise specified in the special provisions, all temporary warning signs shall have black legend on fluorescent orange background.

California codes are designated by (CA). Otherwise, Federal (MUTCD) codes are shown.

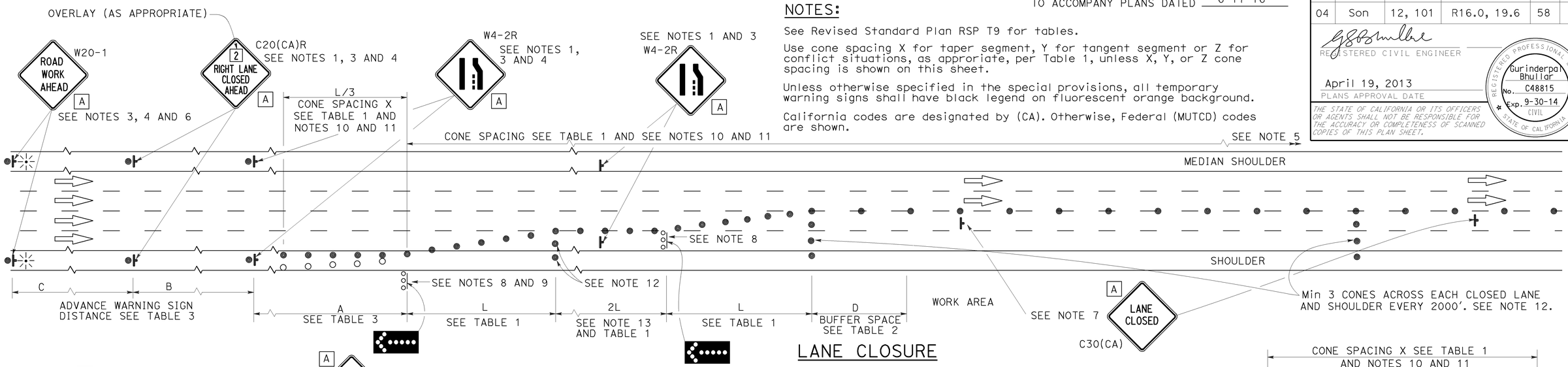

LANE CLOSURE

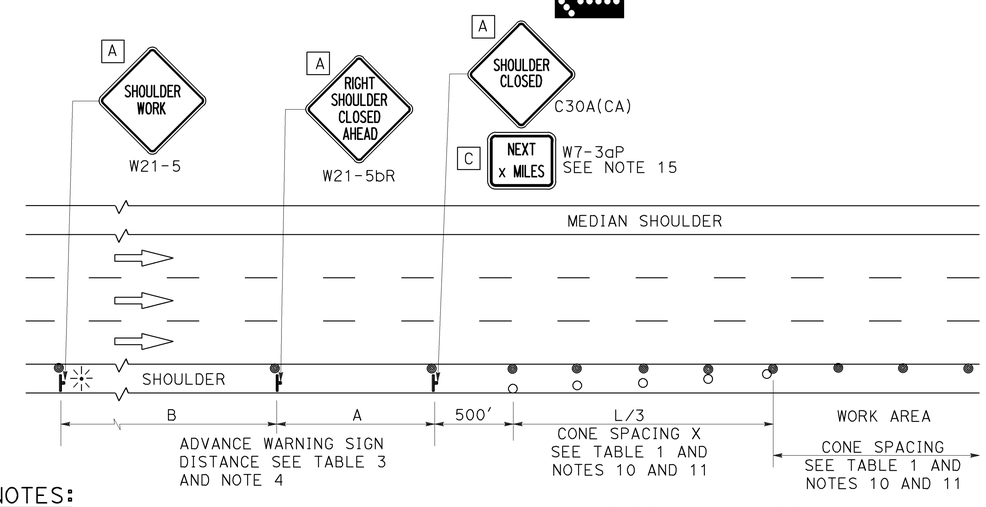

SHOULDER CLOSURE

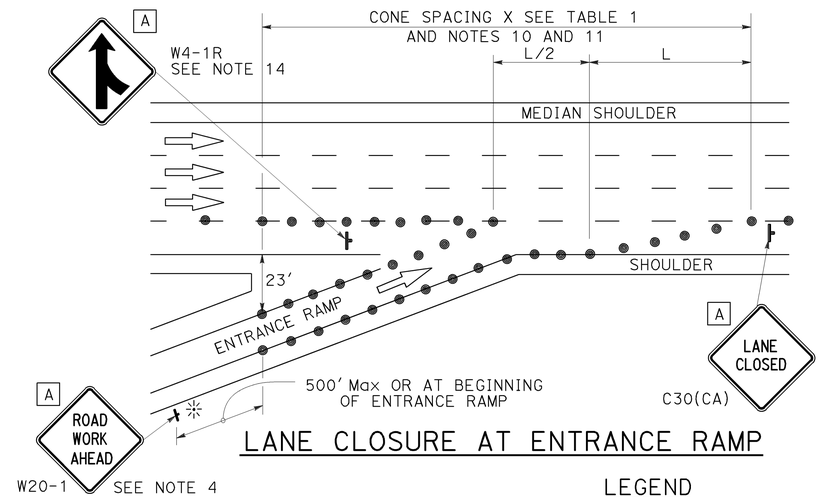

LANE CLOSURE AT ENTRANCE RAMP

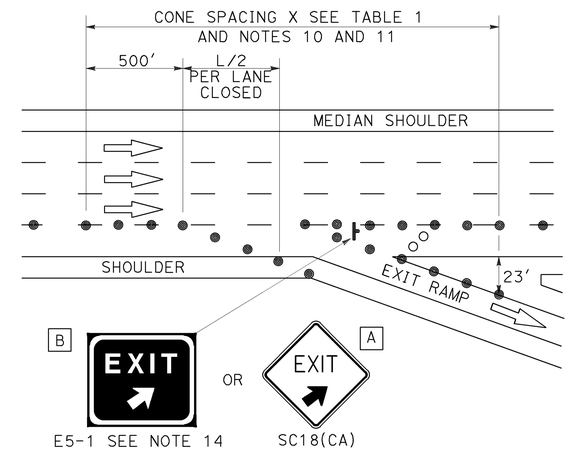

LANE CLOSURE AT EXIT RAMP

NOTES:

1. Median lane closures shall conform to the details as shown except that C20(CA)L and W4-2L signs shall be used.
2. At least one person shall be assigned to provide full time maintenance of traffic control devices for lane closures.
3. Duplicate sign installations are not required:
   a) On opposite shoulder if at least one-half of the available lanes remain open to traffic.
   b) In the median if the width of the median shoulder is less than 8' and the outside lanes are to be closed.
4. Each advance warning sign on each side of the roadway shall be equipped with at least two flags for daytime closure. Each flag shall be at least 16" x 16" in size and shall be orange or fluorescent red-orange in color. Flashing beacons shall be placed at the locations indicated for lane closure during hours of darkness.
5. A G20-2 "END ROAD WORK" sign, with minimum size of 48" x 24" as appropriate, shall be placed at the end of the lane closure unless the end of work area is obvious or ends within a larger project's limits.
6. If the W20-1 sign would follow within 2000' of a stationary W20-1 or G20-1 "ROAD WORK NEXT _____ MILES", use a C20(CA) sign for the first advance warning sign.
7. Place a C30(CA) sign every 2000' throughout length of lane closure.
8. One flashing arrow sign for each lane closed. The flashing arrow signs shall be Type I.
9. A minimum 1500' of sight distance shall be provided where possible for vehicles approaching the first flashing arrow sign. Lane closures shall not begin at top of crest vertical curve or on a horizontal curve.
10. All cones used for lane closures during the hours of darkness shall be fitted with retroreflective bands (or sleeves) as specified in the specifications.
11. Portable delineators, placed at one-half the spacing indicated for traffic cones may be used instead of cones for daytime closures only.
12. Unless otherwise specified in the special provisions, a minimum of 3 cones shall be placed transversely across each closed lane and shoulder at each location where a taper across a traffic lane ends and every 2000' as shown on the "Lane Closure" detail. Two Type II barricades may be used instead of the 3 cones. The transverse alignment of the cones or barricades on the closed shoulder may be shifted from the transverse alignment to provide access to the work.
13. Unless otherwise specified in the special provisions, the 2L tangent shown along lane lines shall be used between the L tapers required for each closed traffic lane.
14. Unless otherwise specified in the special provisions, the E5-1 or SC18(CA) and W4-1 signs shall be used as shown.
15. A W7-3aP "NEXT____ MILES" plaque must be used if theshoulder closure extends beyond the distance that can be perceived by road users.

LEGEND

- TRAFFIC CONE
- TRAFFIC CONE (OPTIONAL TAPER)
- TEMPORARY TRAFFIC CONTROL SIGN
- FLASHING ARROW SIGN (FAS)
- FAS SUPPORT OR TRAILER
- PORTABLE FLASHING BEACON

SIGN PANEL SIZE (Min)

A	48" x 48"
B	72" x 60"
C	36" x 30"

STATE OF CALIFORNIA
DEPARTMENT OF TRANSPORTATION

TRAFFIC CONTROL SYSTEM FOR LANE CLOSURE ON FREEWAYS AND EXPRESSWAYS

NO SCALE

RSP T10 DATED APRIL 19, 2013 SUPERSEDES STANDARD PLAN T10 DATED MAY 20, 2011 - PAGE 237 OF THE STANDARD PLANS BOOK DATED 2010.

REVISED STANDARD PLAN RSP T10

2010 REVISED STANDARD PLAN RSP T10

12-18-12

TO ACCOMPANY PLANS DATED 6-17-16

Dist	COUNTY	ROUTE	POST MILES TOTAL PROJECT	SHEET No.	TOTAL SHEETS
04	Son	12, 101	R16.0, 19.6	59	60

REGISTERED CIVIL ENGINEER

April 19, 2013
PLANS APPROVAL DATE

REGISTERED PROFESSIONAL ENGINEER Gurinderpal Bhullar No. C48815 Exp. 9-30-14 CIVIL STATE OF CALIFORNIA

THE STATE OF CALIFORNIA OR ITS OFFICERS OR AGENTS SHALL NOT BE RESPONSIBLE FOR THE ACCURACY OR COMPLETENESS OF SCANNED COPIES OF THIS PLAN SHEET.

NOTES: See Revised Standard Plan RSP T9 for tables.

Use cone spacing X for taper segment, Y for tangent segment or Z for conflict situations, as approriate, per Table 1, unless X, Y, or Z cone spacing is shown on this sheet.

Unless otherwise specified in the special provisions, all temporary warning signs shall have black legend on fluorescent orange background.

California codes are designated by (CA). Otherwise, Federal (MUTCD) codes are shown.

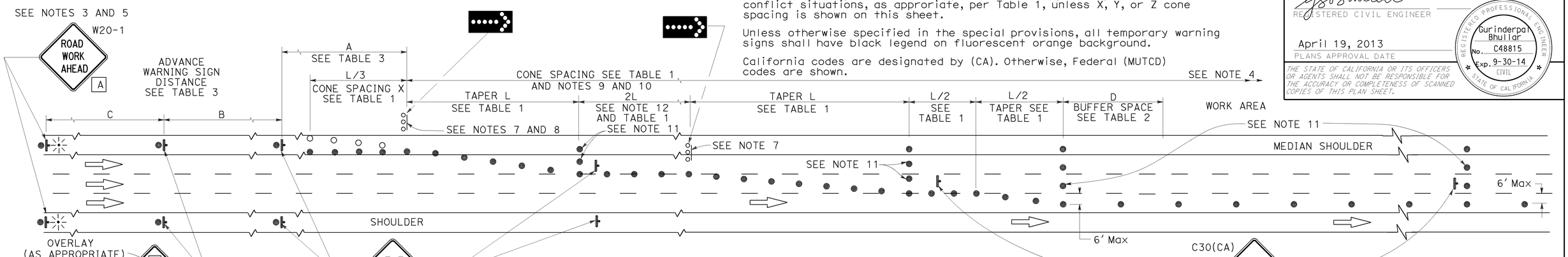

LANE CLOSURE WITH PARTIAL SHOULDER USE

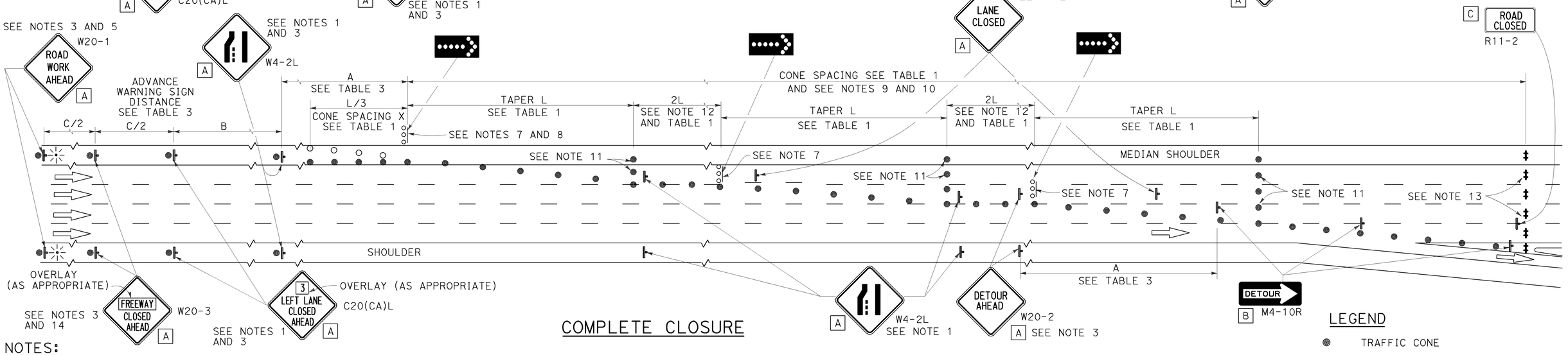

COMPLETE CLOSURE

NOTES:

1. Lane closures on the right side using partial median shoulder as a traffic lane shall conform to the details as shown except that C20(CA)R and W4-2R signs shall be used.
2. At least one person shall be assigned to provide full time maintenance of traffic control devices for lane closures.
3. Each advance warning sign on each side of the roadway shall be equipped with at least two flags for daytime closure. Each flag shall be at least 16" X 16" in size and shall be orange or fluorescent red-orange in color. Flashing beacons shall be placed at the locations indicated for lane closure during hours of darkness.
4. A G20-2 "END ROAD WORK" sign, with minimum size of 48" x 24" as appropriate, shall be placed at the end of the lane closure unless the end of work area is obvious or ends within a larger project's limits.
5. If the W20-1 sign would follow within 2000' of a stationary W20-1 or G20-1 "ROAD WORK NEXT ___ MILES", use a C20(CA) sign for the first advance warning sign.
6. Place a C30(CA) sign every 2000' throughout length of lane closure.
7. One flashing arrow sign for each lane closed. The flashing arrow signs shall be Type I.
8. A minimum 1500' of sight distance shall be provided where possible for vehicles approaching the first flashing arrow sign. Lane closures shall not begin at the top of crest vertical curve or on a horizontal curve.
9. All cones used for lane closures during the hours of darkness shall be fitted with retroreflective bands (or sleeves) as specified in the specifications.
10. Portable delineators, placed at one-half the spacing indicated for traffic cones, may be used instead of cones for daytime closures only.
11. Unless otherwise specified in the special provisions, a minimum of 3 cones shall be placed transversely across each closed lane and shoulder at each location where a taper across a traffic lane ends and every 2000' as shown on the "Lane Closure With Partial Shoulder Use" detail. Two Type II barricades may be used instead of the 3 cones. The transverse alignment of the cones or barricades on the closed shoulder may be shifted from the transverse alignment to provide access to the work.
12. Unless otherwise specified in the special provisions, the 2L tangent shown along lane lines shall be used between the L tapers required for each closed traffic lane.
13. A minimum of Two Type II or III barricades shall be placed across each closed lane and shoulder at the location shown and every 2000' within the complete closure area. Within the complete closure area, the transverse alignment of the barricades on the closed shoulder may be shifted from the transverse alignment to provide access to the work.
14. When specified in the special provisions, a W20-2 "DETOUR AHEAD" sign is to be used in place of the W20-3 "FREEWAY CLOSED AHEAD" sign.

SIGN PANEL SIZE (Min)

A	48" x 48"
B	48" x 18"
C	48" x 30"

LEGEND

- TRAFFIC CONE
- TRAFFIC CONE (OPTIONAL TAPER)
- TEMPORARY TRAFFIC CONTROL SIGN
- FLASHING ARROW SIGN (FAS)
- FAS SUPPORT OR TRAILER
- PORTABLE FLASHING BEACON

STATE OF CALIFORNIA
DEPARTMENT OF TRANSPORTATION

TRAFFIC CONTROL SYSTEM FOR LANE CLOSURES ON FREEWAYS AND EXPRESSWAYS

NO SCALE

RSP T10A DATED APRIL 19, 2013 SUPERSEDES STANDARD PLAN T10A DATED MAY 20, 2011 - PAGE 238 OF THE STANDARD PLANS BOOK DATED 2010.

REVISED STANDARD PLAN RSP T10A

2010 REVISED STANDARD PLAN RSP T10A

12-18-13

Dist	COUNTY	ROUTE	POST MILES TOTAL PROJECT	SHEET No.	TOTAL SHEETS
04	Son	12, 101	R16.0, 19.6	60	60

REGISTERED CIVIL ENGINEER

April 19, 2013
PLANS APPROVAL DATE

REGISTERED PROFESSIONAL ENGINEER Gurinderpal Bhullar No. C48815 Exp. 9-30-14 CIVIL STATE OF CALIFORNIA

THE STATE OF CALIFORNIA OR ITS OFFICERS OR AGENTS SHALL NOT BE RESPONSIBLE FOR THE ACCURACY OR COMPLETENESS OF SCANNED COPIES OF THIS PLAN SHEET.

TO ACCOMPANY PLANS DATED 6-17-16

TYPICAL RAMP CLOSURES

SIGN PANEL SIZE (Min)

- A 48" × 48"
- B 48" × 30"
- C 36" × 36"
- D 48" × 36"

LEGEND

- TRAFFIC CONE
- TEMPORARY TRAFFIC CONTROL SIGN
- BARRICADES
- PORTABLE FLASHING BEACON

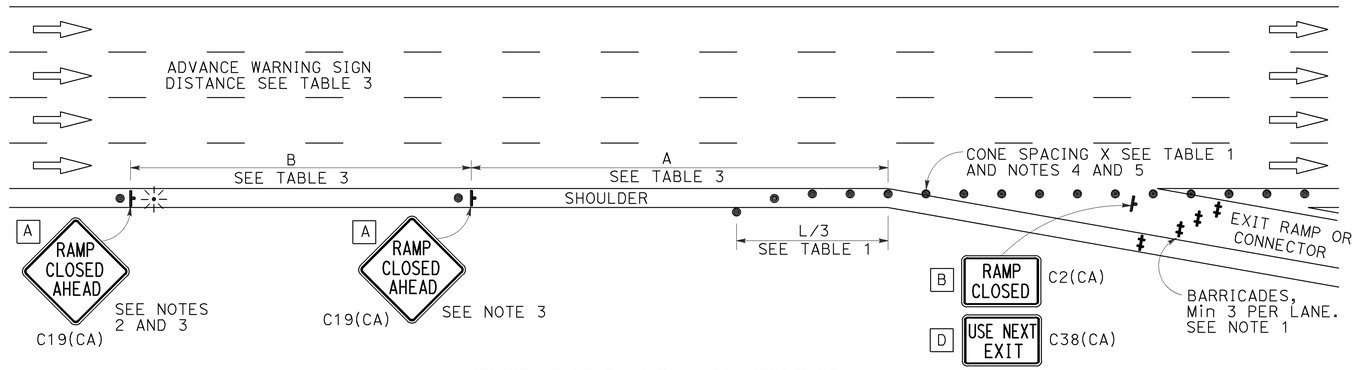

EXIT RAMP OR CONNECTOR

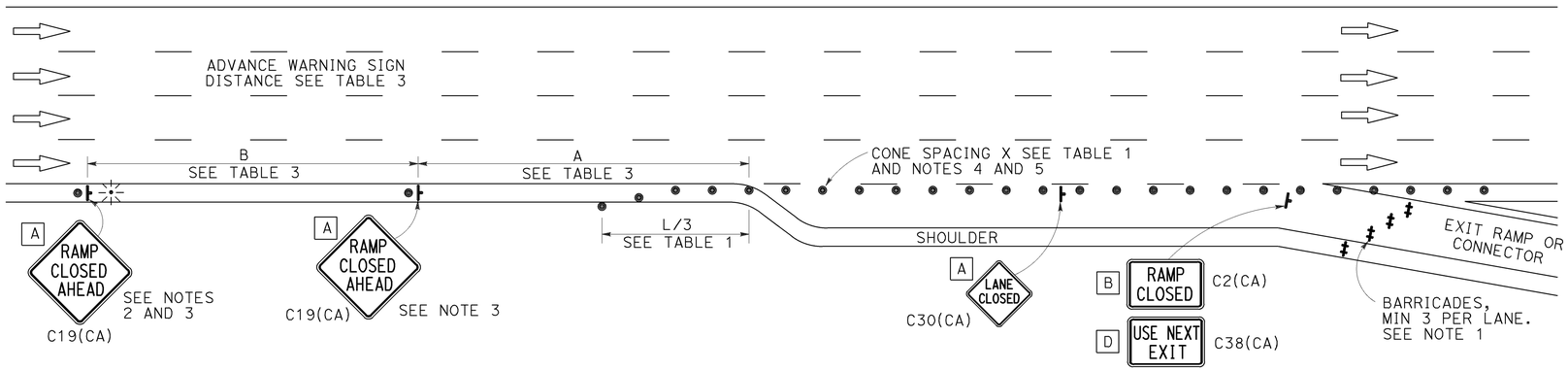

EXIT RAMP OR CONNECTOR WITH ADDITIONAL LANE

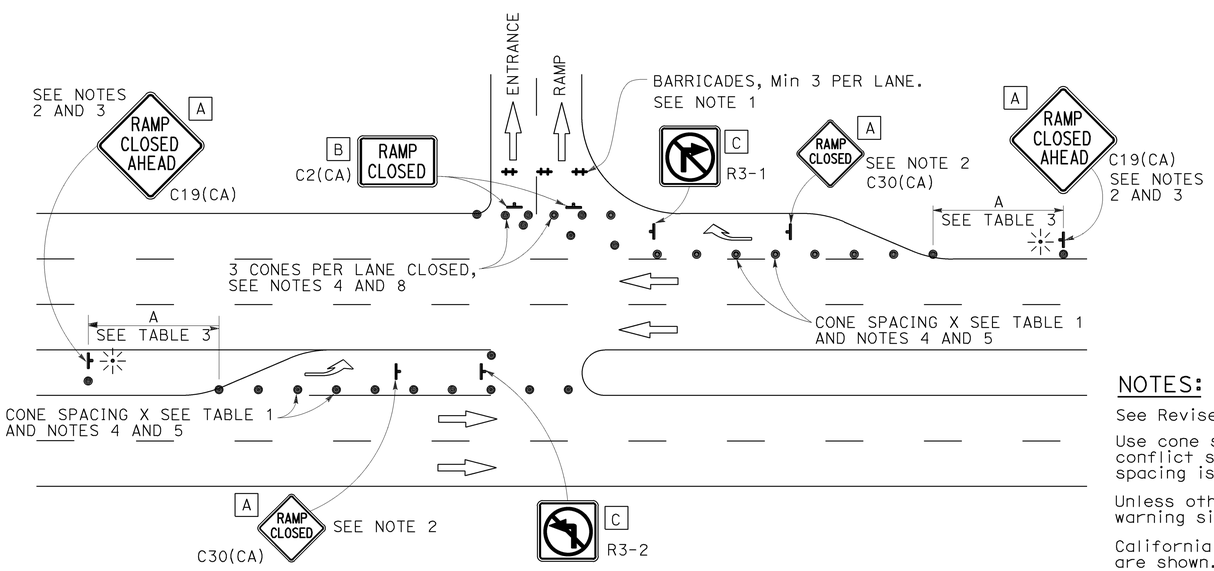

ENTRANCE RAMP WITH TURNING POCKETS

NOTES:

See Revised Standard Plan RSP T9 for tables.

Use cone spacing X for taper segment, Y for tangent segment or Z for conflict situations, as approriate, per Table 1, unless X, Y, or Z cone spacing is shown on this sheet.

Unless otherwise specified in the special provisions, all temporary warning signs shall have black legend on fluorescent orange background.

California codes are designated by (CA). Otherwise, Federal (MUTCD) codes are shown.

NOTES:

1. Barricades shall be Type I, II, or III for closures lasting one week or less and Type III for closures lasting longer than one week.
2. In addition to placing the C19(CA) "RAMP CLOSED AHEAD" and C30(CA) "RAMP CLOSED" signs, black on orange overlay plates with the word "CLOSED" may be mounted, as directed by the Engineer, on all guide signs that refer to the closed ramp. The letter size on the overlay shall be the same as the guide sign.
3. Each advance C19(CA) "RAMP CLOSED AHEAD" sign shall be equipped with at least two flags for daytime closure. Each flag shall be at least 16" × 16" in size and shall be orange or fluorescent red-orange in color. A flashing beacon shall be placed on top of the first C19(CA) sign during hours of darkness.
4. All cones used for ramp closures during the hours of darkness shall be fitted with retroreflective bands (or sleeves) as specified in the specifications.
5. Portable delineators, placed at one-half the spacing indicated for traffic cones, may be used instead of cones for daytime ramp closures only.
6. At least one person shall be assigned to provide full time maintenance of traffic control devices, unless otherwise directed by the Engineer.
7. The existing "EXIT" signs shall be covered during ramp closures.
8. A minimum of 3 cones shall be placed transversely across each closed lane and shoulder.

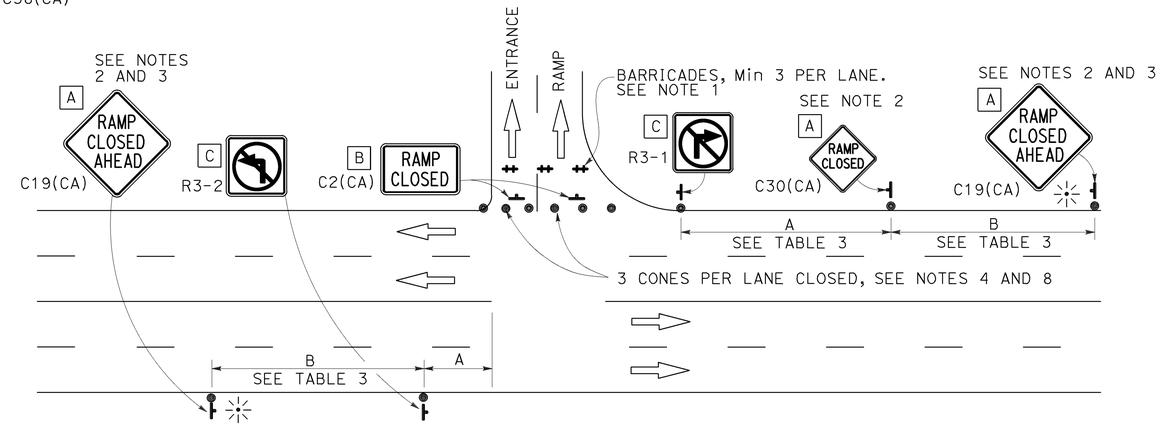

ENTRANCE RAMP WITHOUT TURNING POCKETS

STATE OF CALIFORNIA
DEPARTMENT OF TRANSPORTATION

TRAFFIC CONTROL SYSTEM FOR RAMP CLOSURE

NO SCALE

RSP T14 DATED APRIL 19, 2013 SUPERSEDES STANDARD PLAN T14
DATED MAY 20, 2011 - PAGE 242 OF THE STANDARD PLANS BOOK DATED 2010.

REVISED STANDARD PLAN RSP T14

2010 REVISED STANDARD PLAN RSP T14

12-18-12