Dist	COUNTY	ROUTE	POST MILES TOTAL PROJECT	SHEET No.	TOTAL SHEETS
04	Ala	580	41.5	1	123

STATE OF CALIFORNIA

DEPARTMENT OF TRANSPORTATION

ACIM-580-1(067)E

PROJECT PLANS FOR CONSTRUCTION ON AND ADJACENT TO

STATE HIGHWAY

IN ALAMEDA COUNTY
IN OAKLAND AT PARK AND RIDE
AT FRUITVALE AVENUE

TO BE SUPPLEMENTED BY STANDARD PLANS DATED 2010

INDEX OF PLANS

SHEET No.	DESCRIPTION
1	TITLE SHEET AND LOCATION MAP
2 - 3	TYPICAL CROSS SECTIONS
4 - 5	LAYOUT
6 - 25	CONSTRUCTION DETAILS
26 - 27	TEMPORARY WATER POLLUTION CONTROL PLAN
28 - 33	DRAINAGE PLAN, PROFILES, DETAILS AND QUANTITIES
34 - 35	UTILITY PLAN
36	CONSTRUCTION AREA SIGNS
37 - 40	TRAFFIC HANDLING PLAN, DETAILS AND QUANTITIES
41 - 43	PAVEMENT DELINEATION PLAN AND QUANTITIES
44 - 48	SIGN PLAN, DETAILS AND QUANTITIES
49 - 50	SUMMARY OF QUANTITIES
51	PLANT REMOVAL
52 - 58	IRRIGATION SPRINKLER SCHEDULE, REMOVAL PLAN, PLAN, DETAILS AND QUANTITIES
59 - 61	PLANT LEGEND AND PLANTING PLAN
62 - 63	LANDSCAPE DETAILS AND QUANTITIES
64 - 77	ELECTRICAL PLANS, DETAILS AND QUANTITIES
78 - 123	REVISED STANDARD PLANS

THE STANDARD PLANS LIST APPLICABLE TO THIS CONTRACT IS INCLUDED IN THE NOTICE TO BIDDERS AND SPECIAL PROVISIONS BOOK.

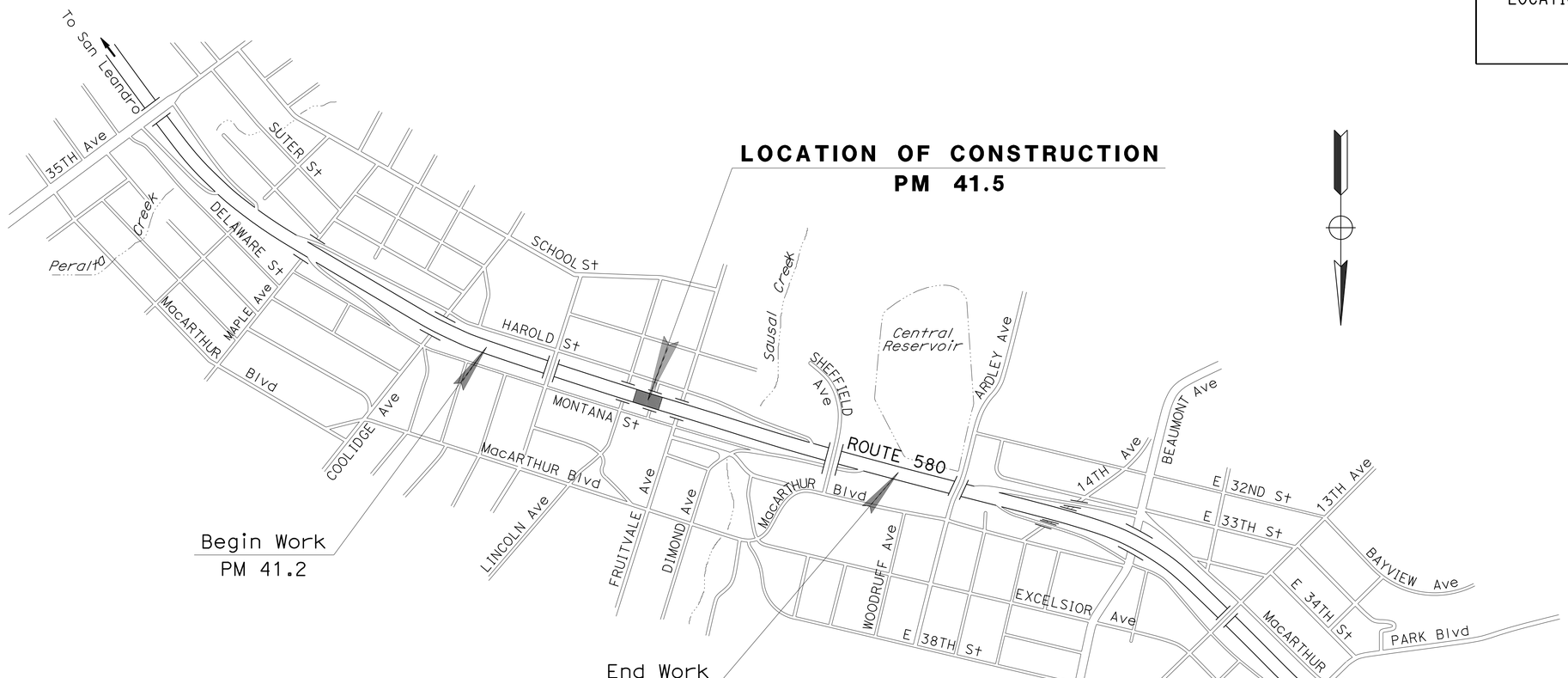

NO SCALE

LOCATION MAP

PROJECT ENGINEER
REGISTERED CIVIL ENGINEER

5-30-16
DATE

June 7, 2016
PLANS APPROVAL DATE

REGISTERED PROFESSIONAL ENGINEER
James Chuang
No. 74690
Exp. 12-31-17
CIVIL
STATE OF CALIFORNIA

THE STATE OF CALIFORNIA OR ITS OFFICERS OR AGENTS SHALL NOT BE RESPONSIBLE FOR THE ACCURACY OR COMPLETENESS OF SCANNED COPIES OF THIS PLAN SHEET.

CONTRACT No.	04-4H2604
PROJECT ID	0413000123

PROJECT MANAGER: KAMRAN ABOLFAZLIAN
DESIGN MANAGER: VINCE BONNER

THE CONTRACTOR SHALL POSSESS THE CLASS (OR CLASSES) OF LICENSE AS SPECIFIED IN THE "NOTICE TO BIDDERS."

LAST REVISION 04-20-16
DATE PLOTTED => 09-AUG-2016
TIME PLOTTED => 15:06

Dist	COUNTY	ROUTE	POST MILES TOTAL PROJECT	SHEET No.	TOTAL SHEETS
04	Ala	580	41.5	2	123

REGISTERED CIVIL ENGINEER DATE 5-30-16

PLANS APPROVAL DATE 6-7-16

REGISTERED PROFESSIONAL ENGINEER James Chuang No. 74690 Exp. 12-31-17 CIVIL STATE OF CALIFORNIA

THE STATE OF CALIFORNIA OR ITS OFFICERS OR AGENTS SHALL NOT BE RESPONSIBLE FOR THE ACCURACY OR COMPLETENESS OF SCANNED COPIES OF THIS PLAN SHEET.

NOTES:

1. DIMENSIONS OF THE PAVEMENT STRUCTURES (STRUCTURAL SECTIONS) ARE SUBJECT TO TOLERANCES SPECIFIED IN THE STANDARD SPECIFICATIONS.
2. FOR V-DITCH DETAILS, SEE CONSTRUCTION DETAILS.
3. FOR LOCATIONS OF STRUCTURAL SECTIONS [4] AND [5], SEE CONSTRUCTION DETAILS.
4. FOR PARKING STALL LAYOUT, SEE PAVEMENT DELINEATION SHEETS.
5. FOR PCC PARKING BUMPER LAYOUTS, SEE PAVEMENT DELINEATION SHEETS.
6. EXCAVATE 0.30′ BEFORE PLACING STRUCTURAL SECTION [1].
7. FOR LOCATION NUMBERS SHOWN, SEE CONSTRUCTION DETAILS.

TYPICAL PAVEMENT STRUCTURAL SECTIONS

1	0.30′ HMA (A)
2	0.50′ HMA (A) 0.50′ Cl 2 AB
3	0.33′ PCC 0.25′ Cl 2 AB
4	0.25′ Cl 2 AB
5	0.50′ PCC 0.25′ Cl 2 AB

ABBREVIATIONS:

&	AND
CT	CALTRANS
HMA (A)	HOT MIX ASPHALT (TYPE A)

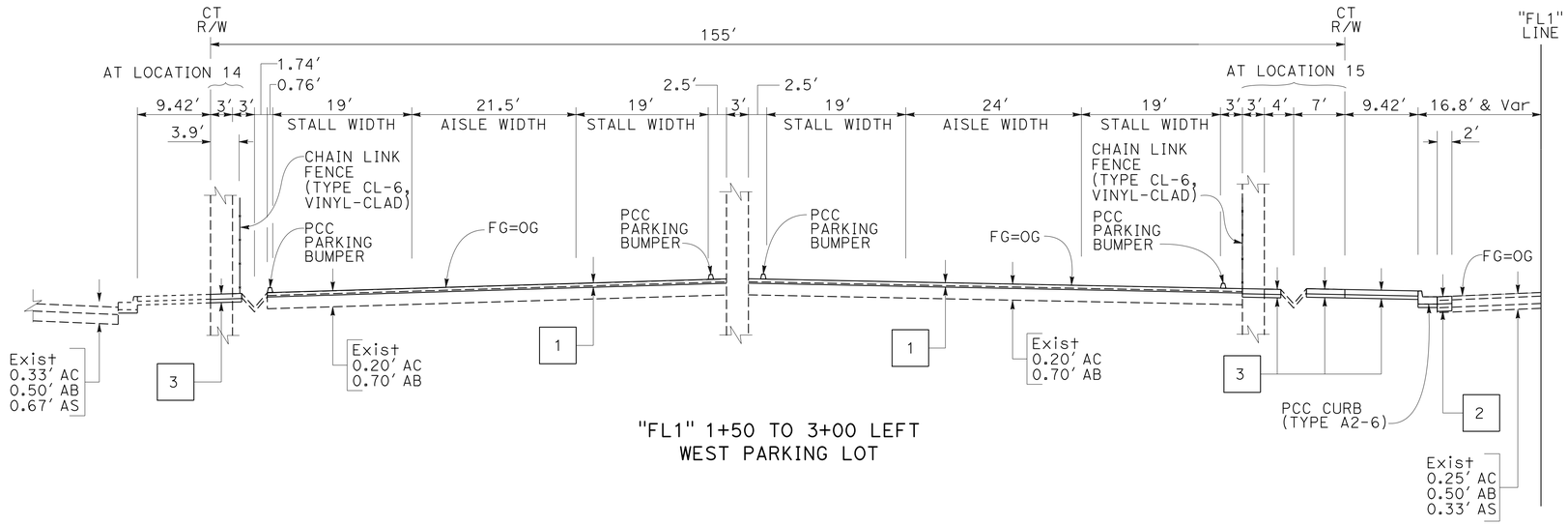

"FL1" 1+50 TO 3+00 LEFT
WEST PARKING LOT

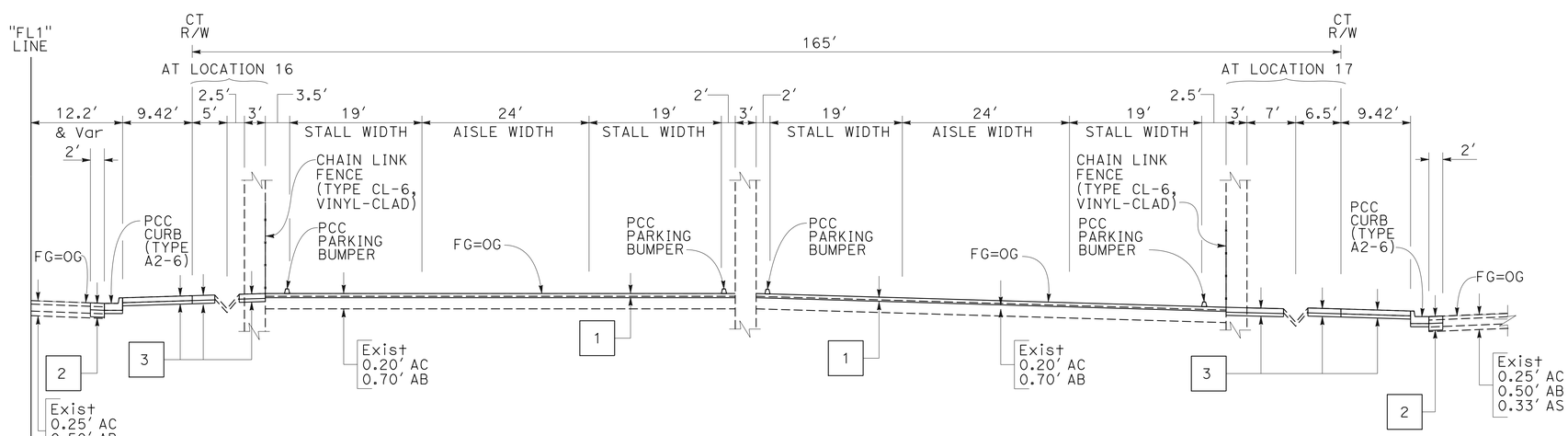

"FL1" 1+50 TO 3+00 RIGHT
EAST PARKING LOT

TYPICAL CROSS SECTIONS

NO SCALE

X-1

JF	5-30-16	JAMES CHUANG	VINCE BONNER
REVISED BY	DATE REVISED	CALCULATED-DESIGNED BY	CHECKED BY

FUNCTIONAL SUPERVISOR: RONALD TSUNG

STATE OF CALIFORNIA - DEPARTMENT OF TRANSPORTATION

Caltrans® DESIGN

LAST REVISION 05-23-16 | DATE PLOTTED => 09-AUG-2016 | TIME PLOTTED => 13:16

Dist	COUNTY	ROUTE	POST MILES TOTAL PROJECT	SHEET No.	TOTAL SHEETS
04	Ala	580	41.5	3	123

REGISTERED CIVIL ENGINEER DATE 5-30-16

PLANS APPROVAL DATE 6-7-16

REGISTERED PROFESSIONAL ENGINEER James Chuang No. 74690 Exp. 12-31-17 CIVIL STATE OF CALIFORNIA

THE STATE OF CALIFORNIA OR ITS OFFICERS OR AGENTS SHALL NOT BE RESPONSIBLE FOR THE ACCURACY OR COMPLETENESS OF SCANNED COPIES OF THIS PLAN SHEET.

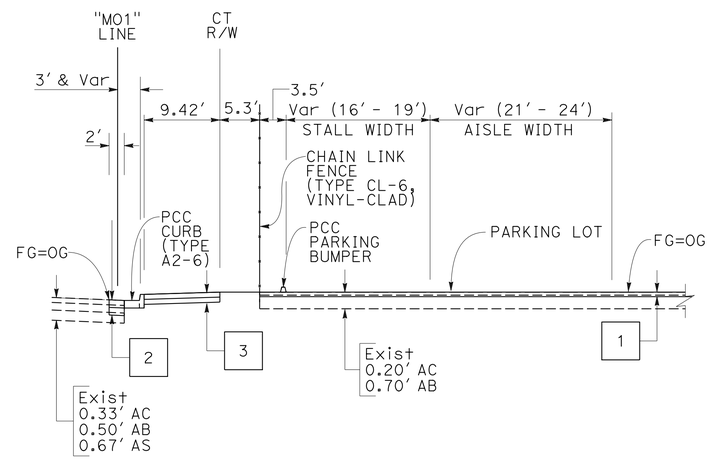

"MO1" 5+00 TO 6+24
"MO1" 6+88 TO 8+40

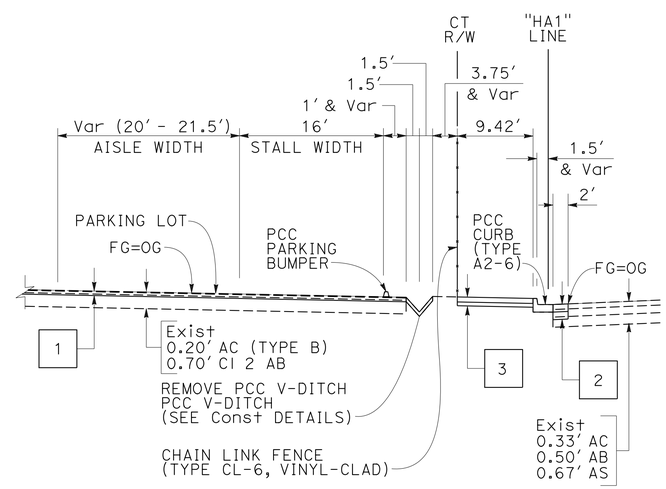

"HA1" 16+00 TO 17+16
"HA1" 18+02 TO 19+30

TYPICAL CROSS SECTIONS

NO SCALE

FOR NOTES, ABBREVIATIONS AND LEGEND, SEE SHEET X-1

X-2

STATE OF CALIFORNIA - DEPARTMENT OF TRANSPORTATION
Caltrans® DESIGN

FUNCTIONAL SUPERVISOR: RONALD TSUNG

CALCULATED-DESIGNED BY: JAMES CHUANG
CHECKED BY: VINCE BONNER

REVISED BY: JF
DATE REVISED: 5-30-16

LAST REVISION: 05-23-16
DATE PLOTTED => 09-AUG-2016
TIME PLOTTED => 13:16

Dist	COUNTY	ROUTE	POST MILES TOTAL PROJECT	SHEET No.	TOTAL SHEETS
04	Ala	580	41.5	4	123

REGISTERED CIVIL ENGINEER 5-30-16 DATE

6-7-16
PLANS APPROVAL DATE

REGISTERED PROFESSIONAL ENGINEER James Chuang No. 74690 Exp. 12-31-17 CIVIL STATE OF CALIFORNIA

THE STATE OF CALIFORNIA OR ITS OFFICERS OR AGENTS SHALL NOT BE RESPONSIBLE FOR THE ACCURACY OR COMPLETENESS OF SCANNED COPIES OF THIS PLAN SHEET.

NOTE:

FOR ACCURATE RIGHT OF WAY DATA, CONTACT RIGHT OF WAY ENGINEERING AT THE DISTRICT OFFICE.

NOTES:

1. FOR PRECAST PCC PARKING BUMPER DETAILS, SEE SHEET PD-1.
2. ONE OF THE PARKING LOTS MUST BE KEPT OPEN AT ALL TIMES DURING CONSTRUCTION.
3. PCC CURB RAMP LOCATIONS 1 THROUGH 13 REQUIRE PRE/POST CONSTRUCTION SURVEYS AT CURB RAMPS.
4. PLACE IRRIGATION CONDUITS BEFORE FINISH PCC AND HMA (TYPE A), SEE SHEET IP-1.
5. BIKE RACK AND BIKE LOCKER TO BE PLACED MINIMUM 3.5′ AND 5′ AWAY RESPECTIVELY FROM FENCE AND FINAL STRIPING.
6. EXCAVATE 0.30′ BEFORE PLACING STRUCTURAL SECTION 1.

ABBREVIATIONS:

CT	CALTRANS
w/	WITH

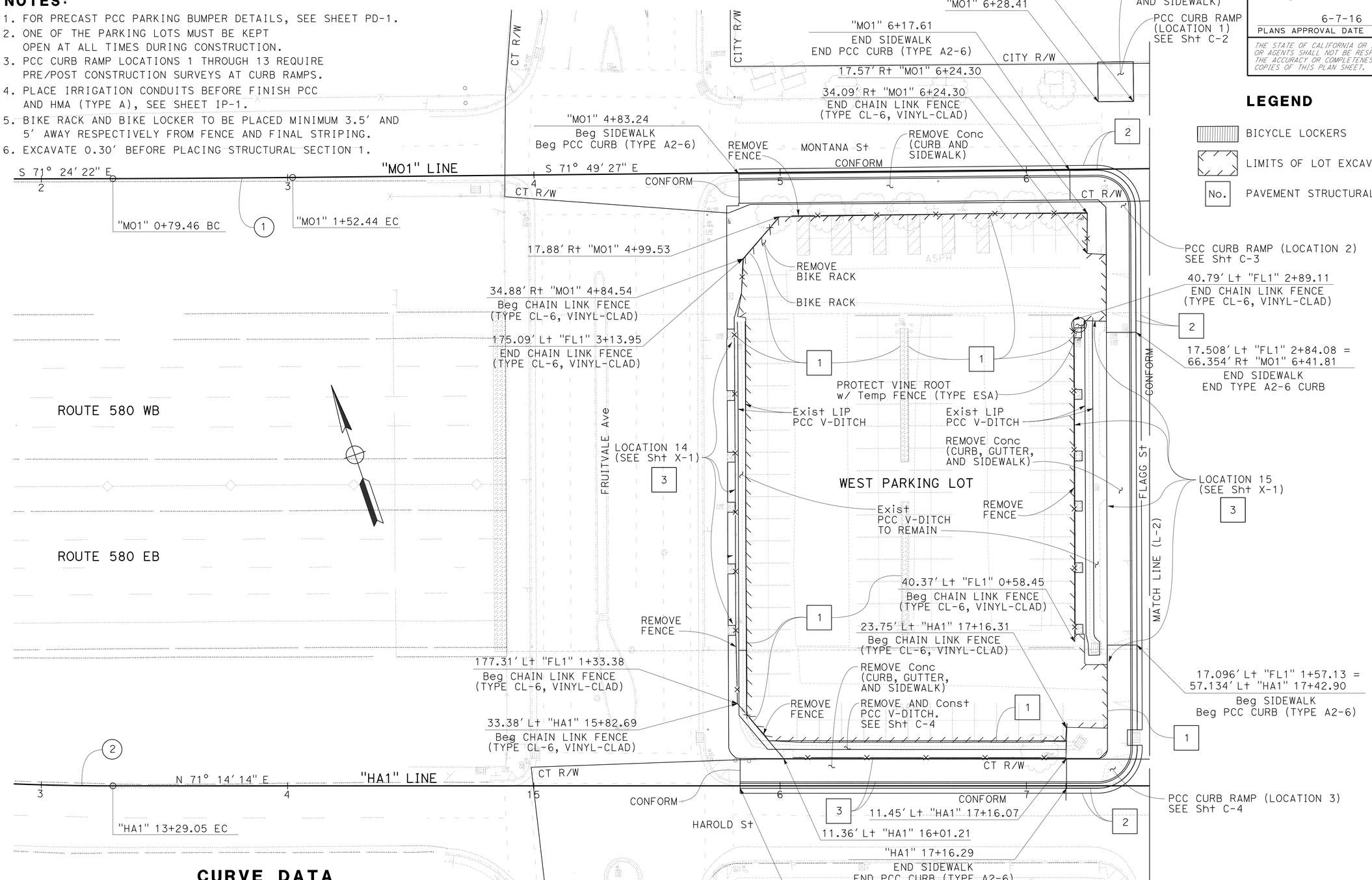

LEGEND

- BICYCLE LOCKERS
- LIMITS OF LOT EXCAVATION AND PAVING
- No. PAVEMENT STRUCTURAL SECTION NUMBER

CURVE DATA

No. ⊕	R	Δ	T	L	N	E
1	10000′	00° 25′ 05″	36.49′	72.98′	2127352.89	6068633.90
2	1000′	07° 08′ 57″	62.47′	124.78′	2118588.35	6065687.68

LAYOUT

SCALE: 1″ = 20′

L-1

REVISED BY	DATE REVISED
JF	5-30-16

CALCULATED-DESIGNED BY: JAMES CHUANG
CHECKED BY: VINCE BONNER
FUNCTIONAL SUPERVISOR: RONALD TSUNG

STATE OF CALIFORNIA - DEPARTMENT OF TRANSPORTATION
DESIGN
Caltrans

LAST REVISION 06-03-16 | DATE PLOTTED => 09-AUG-2016 | TIME PLOTTED => 13:16

Dist	COUNTY	ROUTE	POST MILES TOTAL PROJECT	SHEET No.	TOTAL SHEETS
04	Ala	580	41.5	5	123

REGISTERED CIVIL ENGINEER DATE 5-30-16

PLANS APPROVAL DATE 6-7-16

REGISTERED PROFESSIONAL ENGINEER James Chuang No. 74690 Exp. 12-31-17 CIVIL STATE OF CALIFORNIA

THE STATE OF CALIFORNIA OR ITS OFFICERS OR AGENTS SHALL NOT BE RESPONSIBLE FOR THE ACCURACY OR COMPLETENESS OF SCANNED COPIES OF THIS PLAN SHEET.

NOTE:

FOR ACCURATE RIGHT OF WAY DATA, CONTACT RIGHT OF WAY ENGINEERING AT THE DISTRICT OFFICE.

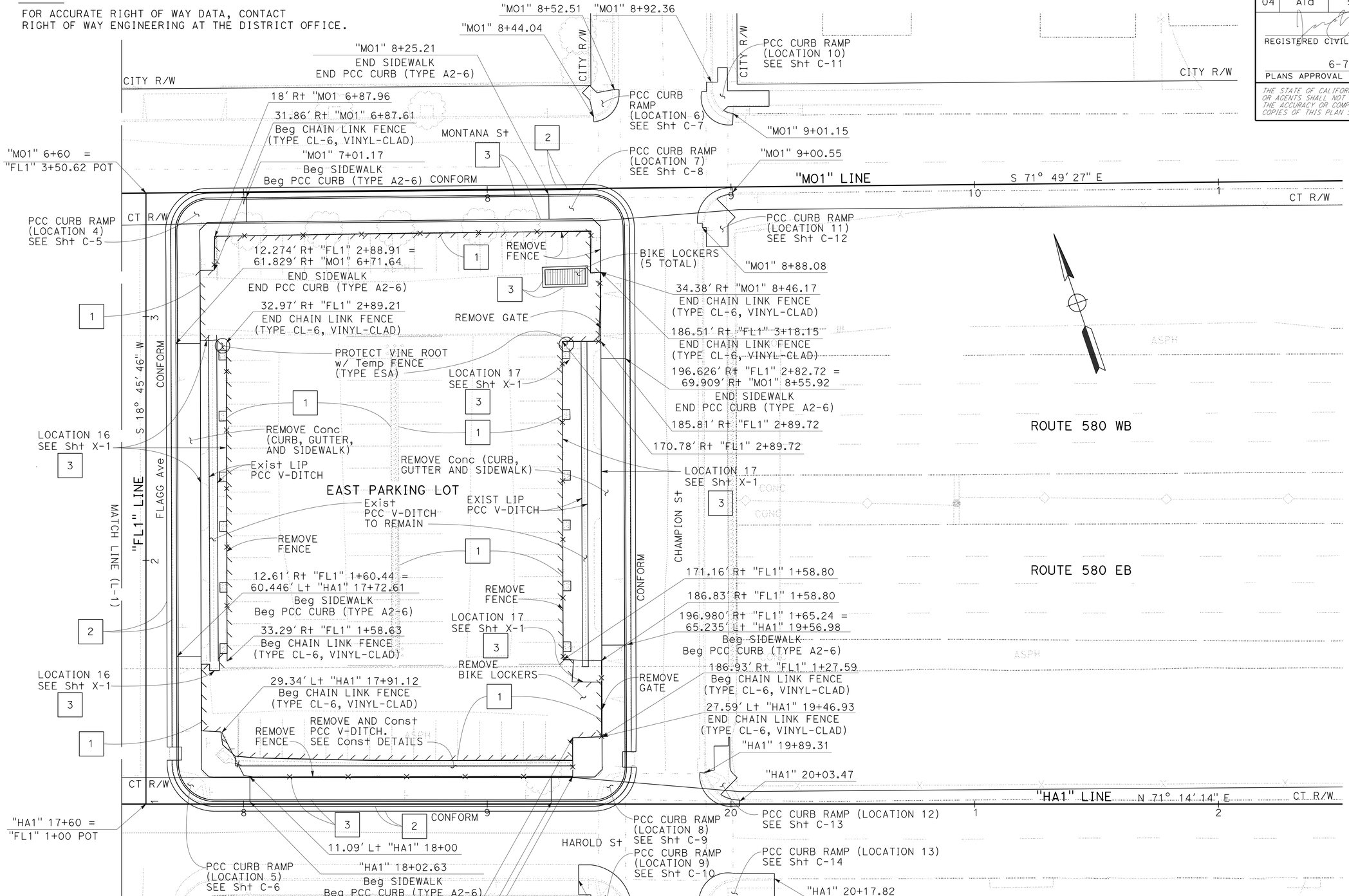

FOR NOTES, ABBREVIATIONS AND LEGEND, SEE SHEET L-1

LAYOUT

SCALE: 1" = 20'

L-2

REVISED BY	DATE REVISED
JF	5-30-16

CALCULATED-DESIGNED BY: JAMES CHUANG
CHECKED BY: VINCE BONNER
FUNCTIONAL SUPERVISOR: RONALD TSUNG

STATE OF CALIFORNIA - DEPARTMENT OF TRANSPORTATION
Caltrans
DESIGN

LAST REVISION 06-03-16 | DATE PLOTTED => 09-AUG-2016 | TIME PLOTTED => 13:16

Dist	COUNTY	ROUTE	POST MILES TOTAL PROJECT	SHEET No.	TOTAL SHEETS
04	Ala	580	41.5	6	123

REGISTERED CIVIL ENGINEER DATE 5-30-16

PLANS APPROVAL DATE 6-7-16

REGISTERED PROFESSIONAL ENGINEER James Chuang No. 74690 Exp. 12-31-17 CIVIL STATE OF CALIFORNIA

THE STATE OF CALIFORNIA OR ITS OFFICERS OR AGENTS SHALL NOT BE RESPONSIBLE FOR THE ACCURACY OR COMPLETENESS OF SCANNED COPIES OF THIS PLAN SHEET.

ABBREVIATIONS:

&	AND
FLC	FLOW LINE CURB
w/	WITH
TOC	TOP OF CURB

NOTE:

1. EXACT PLACEMENT OF REMOVABLE BOLLARD TO BE DETERMINED BY THE ENGINEER.

LEGEND:

- GUARD POST (Mod)
- BIKE LOCKERS

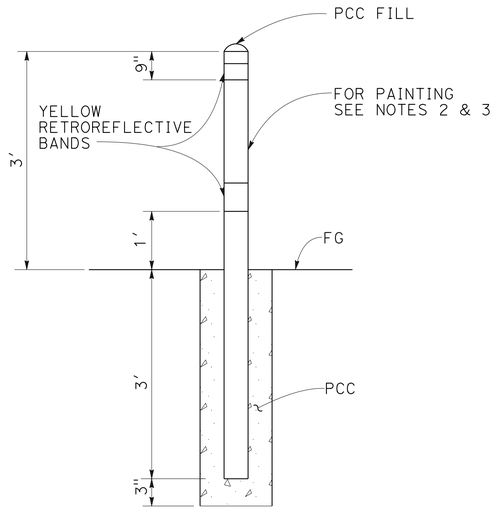

GUARD POST (MODIFIED)

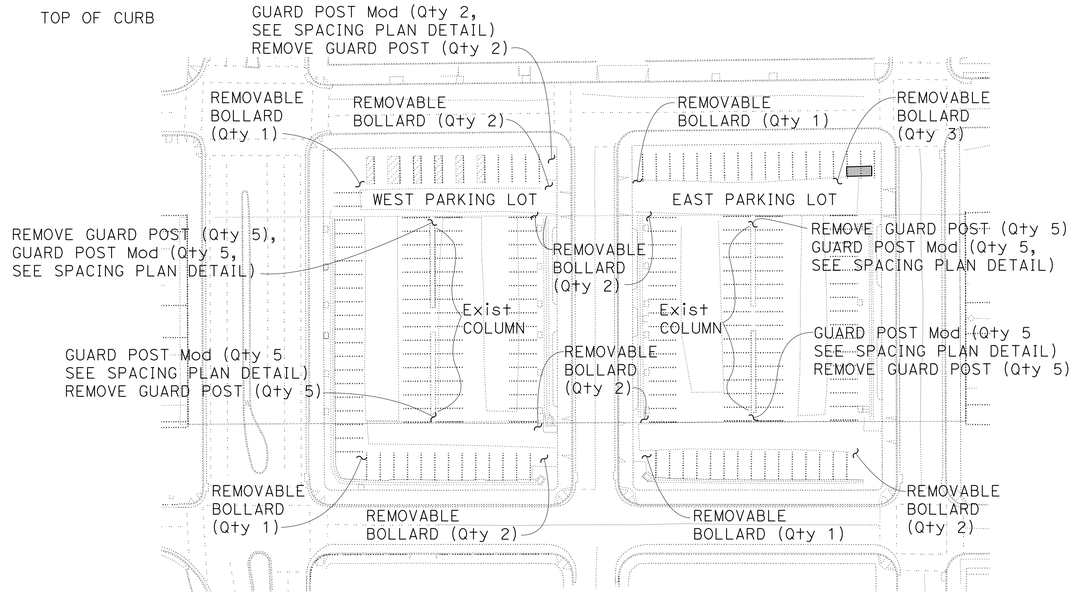

PLAN

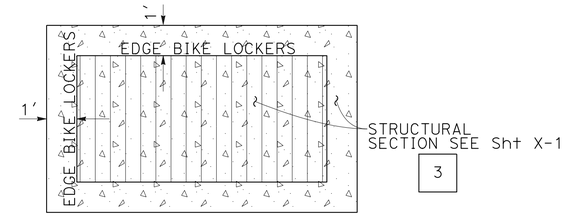

BIKE LOCKERS FOUNDATION PLAN

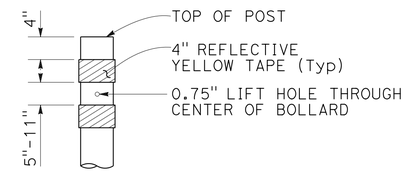

ELEVATION

REFLECTIVE TAPE

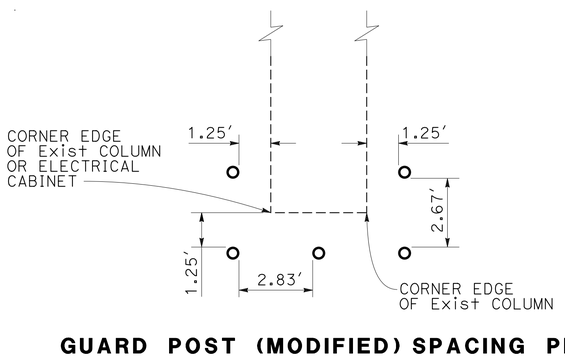

GUARD POST (MODIFIED) SPACING PLAN

NOTES:

1. PRIME ALL METAL WITH ONE COAT OF GALVANIZE-COMPATIBLE PRIMER AND TWO COATS OF WHITE INDUSTRIAL ENAMEL.
2. APPLY TWO 6" WIDE STRIPS OF REFLECTORIZED YELLOW TAPE. PROVIDE ONE AT THE TOP AND ONE AT THE MIDPOINT OF THE GUARD POST.
3. FOR DETAILS NOT SHOWN, SEE RSP ES-7Q.
4. LOCK SLOT SHALL BE 0.60" x 1" WITH ROUND ENDS, 0.30" RADIUS, AND MINIMUM 0.50" CLEAR FROM EDGES ALL AROUND.
5. SLOTS SHALL DIRECTLY ALIGN WITH EACH OTHER.
6. STEEL SLEEVE TO BE CONSTRUCTED WITH A DIAMETER 0.10" LARGER THAN POST. WALL THICKNESS OF SLEEVE TO BE SAME AS POST OR LARGER.
7. THE CONTRACTOR MAY SUBMIT ALTERNATIVE DETAILS FOR APPROVAL BY THE ENGINEER.

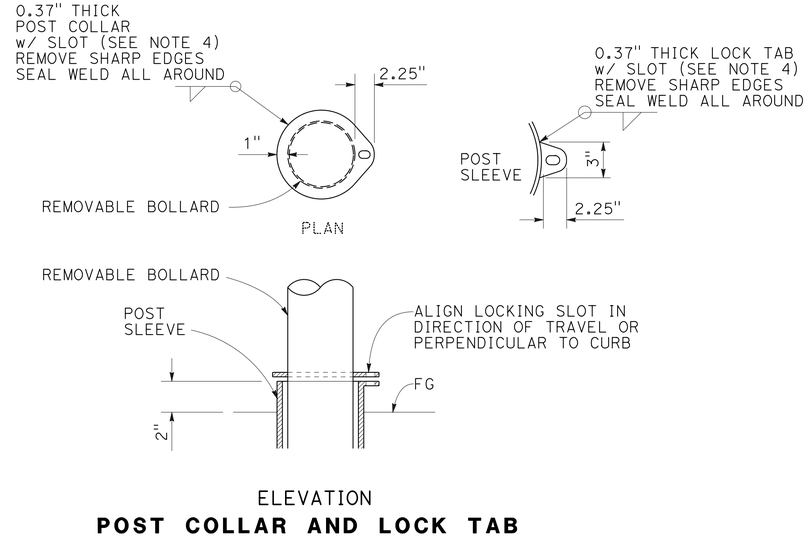

ELEVATION

POST COLLAR AND LOCK TAB

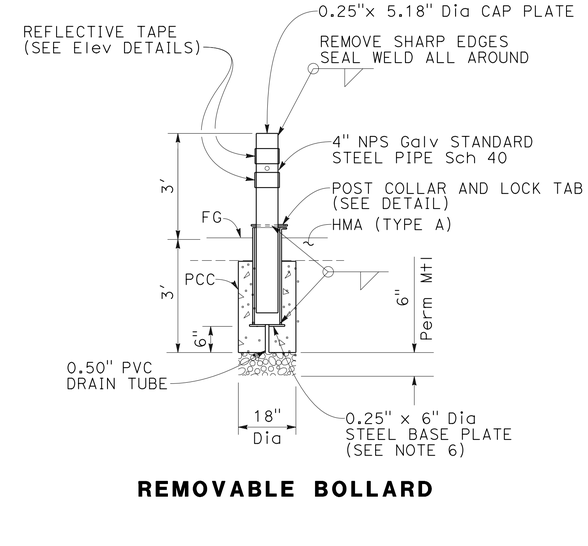

REMOVABLE BOLLARD

CONSTRUCTION DETAILS

NO SCALE

C-1

REVISED BY	DATE REVISED
JF	5-30-16

JAMES CHUANG — VINCE BONNER — CALCULATED-DESIGNED BY — CHECKED BY

FUNCTIONAL SUPERVISOR: RONALD TSUNG

STATE OF CALIFORNIA - DEPARTMENT OF TRANSPORTATION — DESIGN — Caltrans

LAST REVISION 04-28-16 — DATE PLOTTED => 09-AUG-2016 — TIME PLOTTED => 13:16

Dist	COUNTY	ROUTE	POST MILES TOTAL PROJECT	SHEET No.	TOTAL SHEETS
04	Ala	580	41.5	7	123

REGISTERED CIVIL ENGINEER DATE 5-30-16

PLANS APPROVAL DATE 6-7-16

REGISTERED PROFESSIONAL ENGINEER James Chuang No. 74690 Exp. 12-31-17 CIVIL STATE OF CALIFORNIA

THE STATE OF CALIFORNIA OR ITS OFFICERS OR AGENTS SHALL NOT BE RESPONSIBLE FOR THE ACCURACY OR COMPLETENESS OF SCANNED COPIES OF THIS PLAN SHEET.

NOTE:

1. FOR CURB RAMP DETAILS NOT SHOWN, SEE RSP A88A.

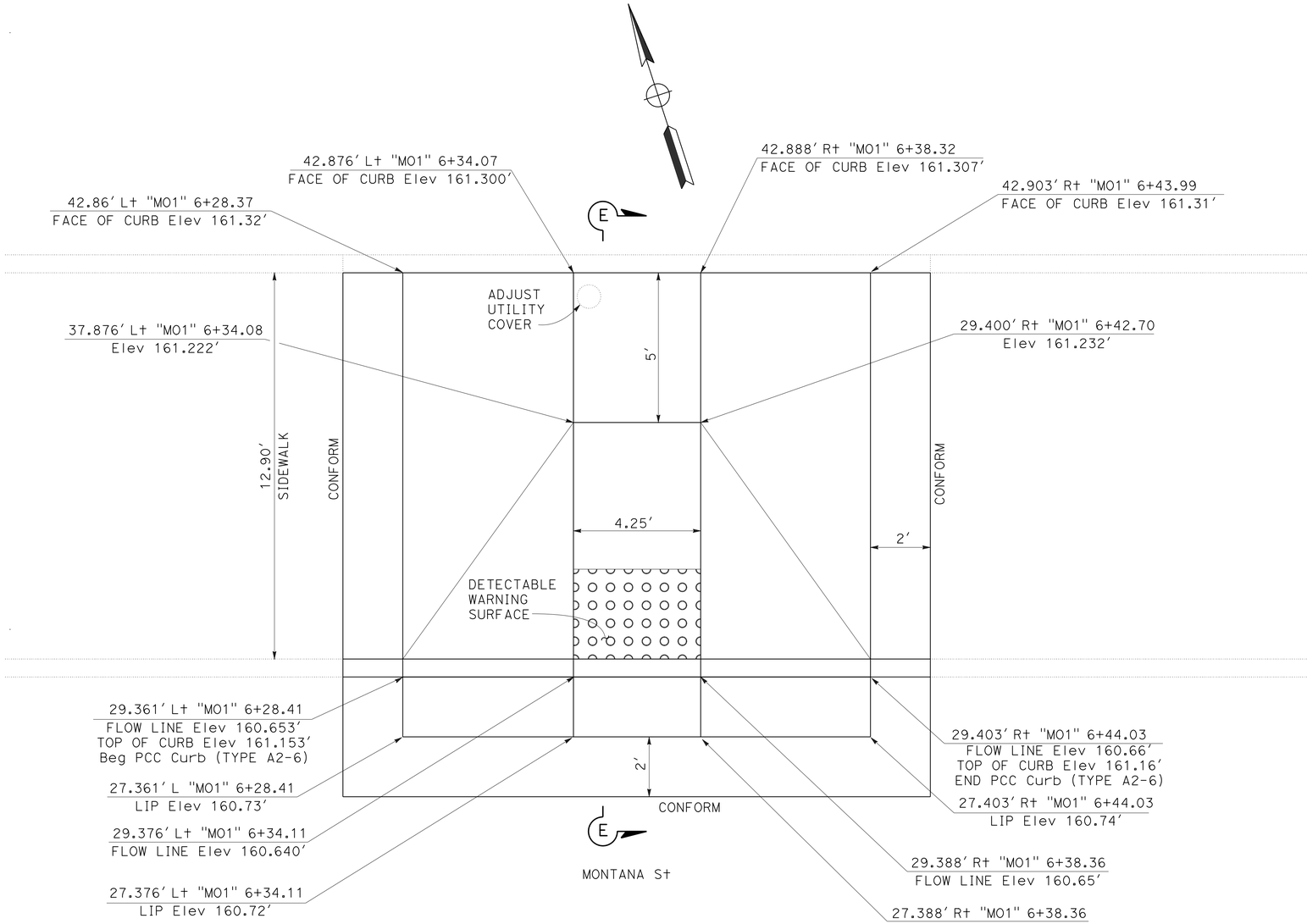

CURB RAMP LOCATION 1

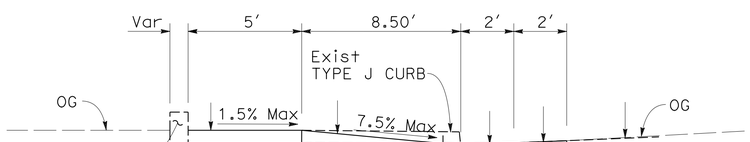

SECTION E-E

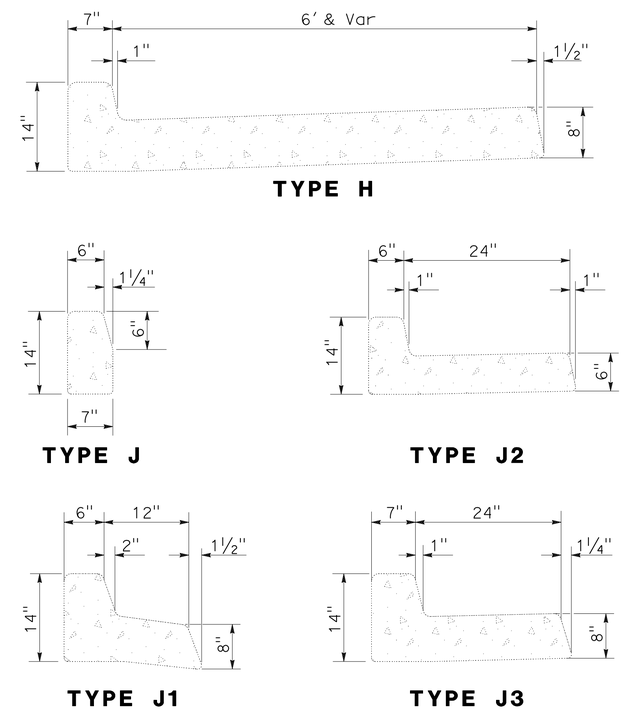

CITY STREET CURBS (EXISTING)

FOR NOTES, ABBREVIATIONS AND LEGEND, SEE SHEET C-1

CONSTRUCTION DETAILS

NO SCALE

C-2

STATE OF CALIFORNIA - DEPARTMENT OF TRANSPORTATION

DESIGN

FUNCTIONAL SUPERVISOR: RONALD TSUNG

JAMES CHUANG | VINCE BONNER | REVISED BY: JF | DATE REVISED: 5-30-16

CALCULATED-DESIGNED BY | CHECKED BY

LAST REVISION 04-28-16 | DATE PLOTTED => 09-AUG-2016 | TIME PLOTTED => 13:16

Dist	COUNTY	ROUTE	POST MILES TOTAL PROJECT	SHEET No.	TOTAL SHEETS
04	Ala	580	41.5	8	123

REGISTERED CIVIL ENGINEER 5-30-16 DATE

6-7-16
PLANS APPROVAL DATE

REGISTERED PROFESSIONAL ENGINEER James Chuang No. 74690 Exp. 12-31-17 CIVIL STATE OF CALIFORNIA

THE STATE OF CALIFORNIA OR ITS OFFICERS OR AGENTS SHALL NOT BE RESPONSIBLE FOR THE ACCURACY OR COMPLETENESS OF SCANNED COPIES OF THIS PLAN SHEET.

NOTE:

1. FOR CURB RAMP DETAILS NOT SHOWN, SEE RSP A88A.
2. FOR CURB AND GUTTER DETAILS IN SECTION C-C (TYPICAL) NOT SHOWN, SEE RSP A87A. CURB HEIGHT WILL BE REFERENCED FROM CONSTRUCTION DETAIL CALLOUTS.

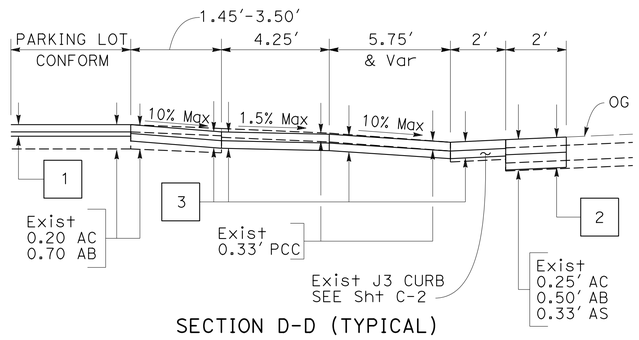

SECTION D-D (TYPICAL)

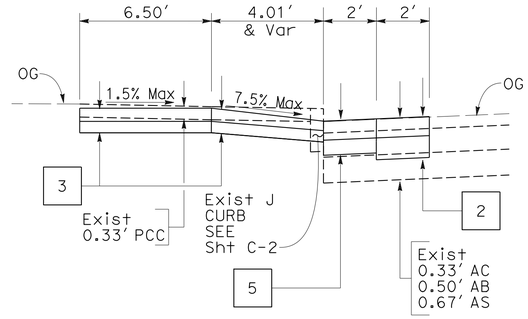

SECTION F-F

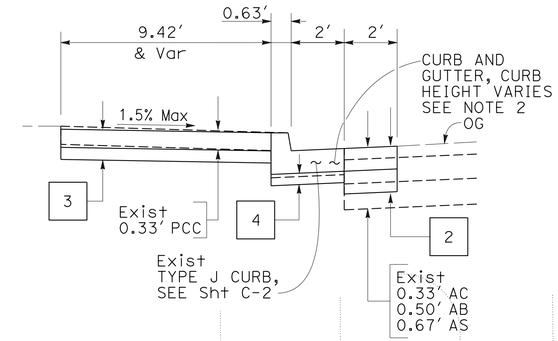

SECTION C-C (TYPICAL)

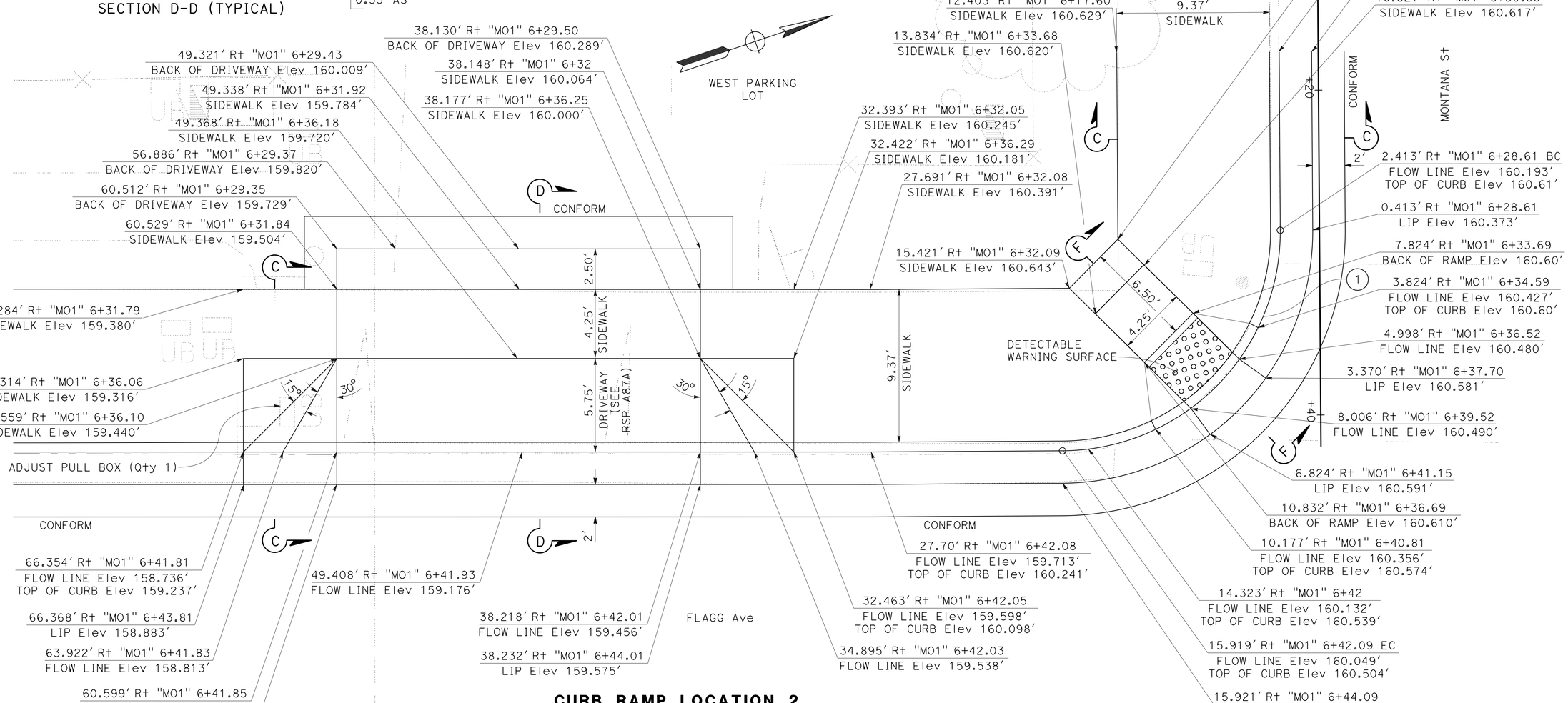

CURB RAMP LOCATION 2

CURVE DATA

No. ⊛	R	Δ	T	L	N-COORDINATE	E-COORDINATE
1	13.50'	90° 00' 00"	13.50'	21.20'	2117734.86	6065819.89

FOR NOTES, ABBREVIATIONS AND LEGEND, SEE SHEET C-1

CONSTRUCTION DETAILS

NO SCALE

C-3

REVISED BY	DATE REVISED
JF	5-30-16

JAMES CHUANG — VINCE BONNER — CALCULATED-DESIGNED BY — CHECKED BY

FUNCTIONAL SUPERVISOR: RONALD TSUNG

STATE OF CALIFORNIA - DEPARTMENT OF TRANSPORTATION — DESIGN — Caltrans

LAST REVISION 04-07-16 — DATE PLOTTED => 09-AUG-2016 — TIME PLOTTED => 13:16

Dist	COUNTY	ROUTE	POST MILES TOTAL PROJECT	SHEET No.	TOTAL SHEETS
04	Ala	580	41.5	9	123

REGISTERED CIVIL ENGINEER DATE 5-30-16

PLANS APPROVAL DATE 6-7-16

REGISTERED PROFESSIONAL ENGINEER James Chuang No. 74690 Exp. 12-31-17 CIVIL STATE OF CALIFORNIA

THE STATE OF CALIFORNIA OR ITS OFFICERS OR AGENTS SHALL NOT BE RESPONSIBLE FOR THE ACCURACY OR COMPLETENESS OF SCANNED COPIES OF THIS PLAN SHEET.

NOTES:

1. FOR CURB RAMP DETAILS NOT SHOWN, SEE RSP A88A.
2. FOR SECTIONS C-C AND D-D, SEE SHEET C-3.

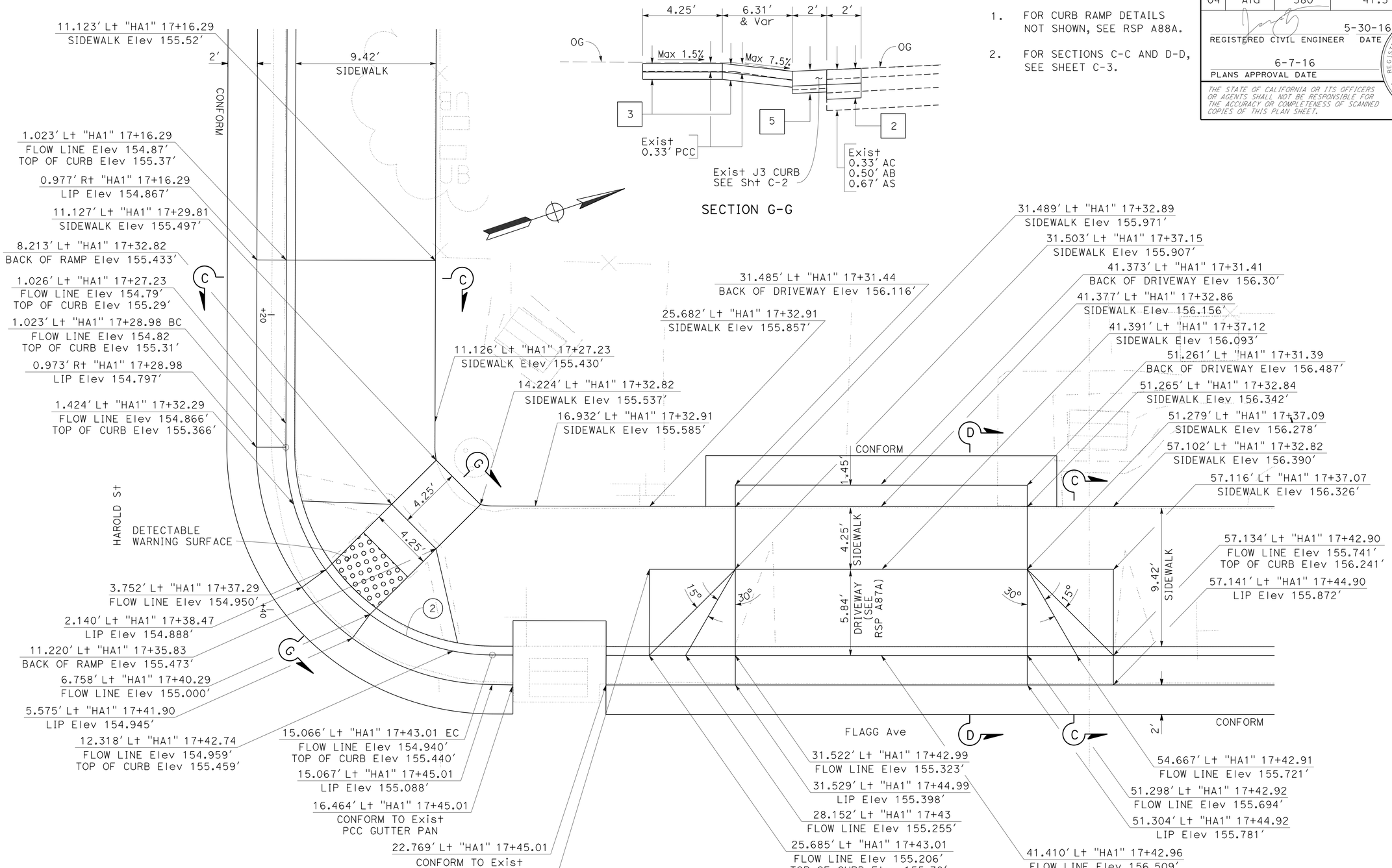

CURB RAMP LOCATION 3

CURVE DATA

No. ◉	R	Δ	T	L	N-COORDINATE	E-COORDINATE
2	14.03′	90° 00′ 00″	14.03′	22.05′	2117527.12	6065749.55

FOR NOTES, ABBREVIATIONS AND LEGEND, SEE SHEET C-1

CONSTRUCTION DETAILS

NO SCALE

C-4

REVISED BY	DATE REVISED	CALCULATED-DESIGNED BY	CHECKED BY	FUNCTIONAL SUPERVISOR
JF	5-30-16	JAMES CHUANG	VINCE BONNER	RONALD TSUNG

STATE OF CALIFORNIA - DEPARTMENT OF TRANSPORTATION

Caltrans® DESIGN

LAST REVISION 04-28-16 | DATE PLOTTED => 09-AUG-2016 | TIME PLOTTED => 13:16

Dist	COUNTY	ROUTE	POST MILES TOTAL PROJECT	SHEET No.	TOTAL SHEETS
04	Ala	580	41.5	10	123

REGISTERED CIVIL ENGINEER 5-30-16 DATE

6-7-16
PLANS APPROVAL DATE

REGISTERED PROFESSIONAL ENGINEER James Chuang No. 74690 Exp. 12-31-17 CIVIL STATE OF CALIFORNIA

THE STATE OF CALIFORNIA OR ITS OFFICERS OR AGENTS SHALL NOT BE RESPONSIBLE FOR THE ACCURACY OR COMPLETENESS OF SCANNED COPIES OF THIS PLAN SHEET.

NOTES:

1. FOR CURB RAMP DETAILS NOT SHOWN, SEE RSP A88A.
2. FOR SECTION C-C AND D-D, SEE SHEET C-3.

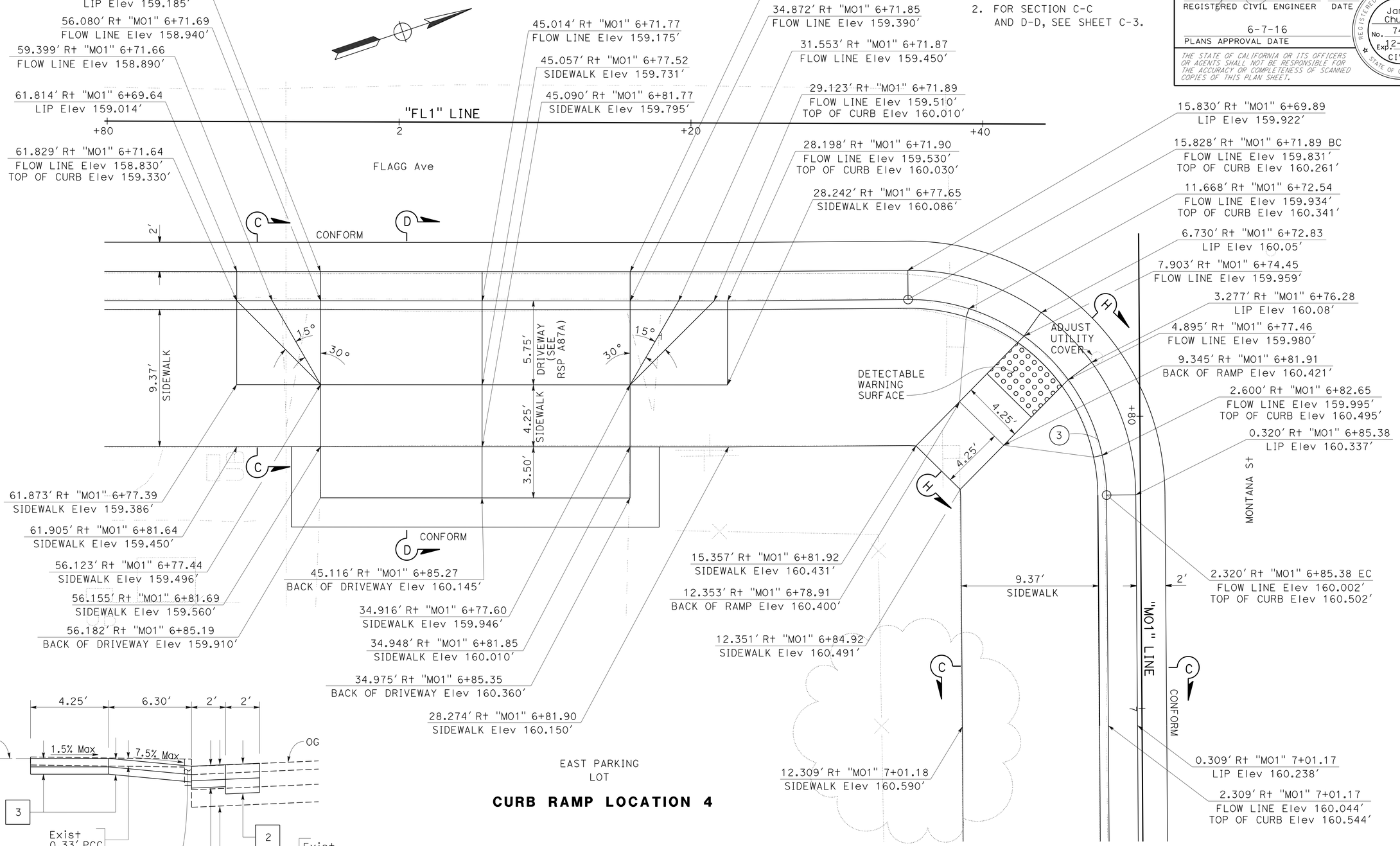

CURB RAMP LOCATION 4

SECTION H-H

CURVE DATA

No. ⊛	R	Δ	T	L	N-COORDINATE	E-COORDINATE
3	13.50'	90° 00' 00"	13.50'	21.20'	2117717.23	6065873.88

FOR NOTES, ABBREVIATIONS AND LEGEND, SEE SHEET C-1

CONSTRUCTION DETAILS

NO SCALE

C-5

STATE OF CALIFORNIA - DEPARTMENT OF TRANSPORTATION
DESIGN
FUNCTIONAL SUPERVISOR: RONALD TSUNG
CALCULATED-DESIGNED BY: JAMES CHUANG
CHECKED BY: VINCE BONNER
REVISED BY: JF
DATE REVISED: 5-30-16

LAST REVISION 04-28-16
DATE PLOTTED => 09-AUG-2016
TIME PLOTTED => 13:16

Dist	COUNTY	ROUTE	POST MILES TOTAL PROJECT	SHEET No.	TOTAL SHEETS
04	Ala	580	41.5	11	123

REGISTERED CIVIL ENGINEER 5-30-16 DATE

6-7-16
PLANS APPROVAL DATE

REGISTERED PROFESSIONAL ENGINEER James Chuang No. 74690 Exp. 12-31-17 CIVIL STATE OF CALIFORNIA

THE STATE OF CALIFORNIA OR ITS OFFICERS OR AGENTS SHALL NOT BE RESPONSIBLE FOR THE ACCURACY OR COMPLETENESS OF SCANNED COPIES OF THIS PLAN SHEET.

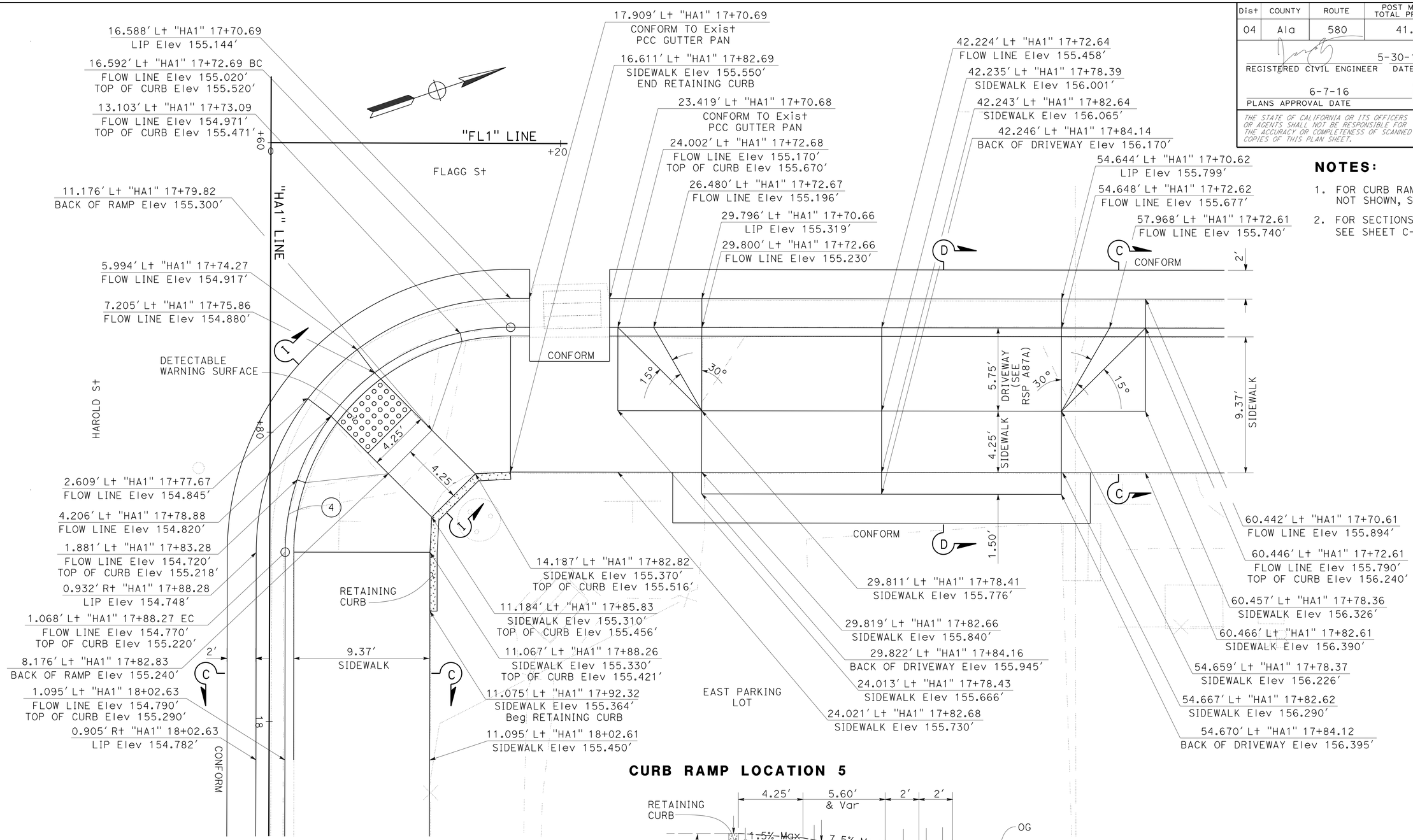

NOTES:

1. FOR CURB RAMP DETAILS NOT SHOWN, SEE RSP A88A.
2. FOR SECTIONS C-C AND D-D, SEE SHEET C-3.

CURB RAMP LOCATION 5

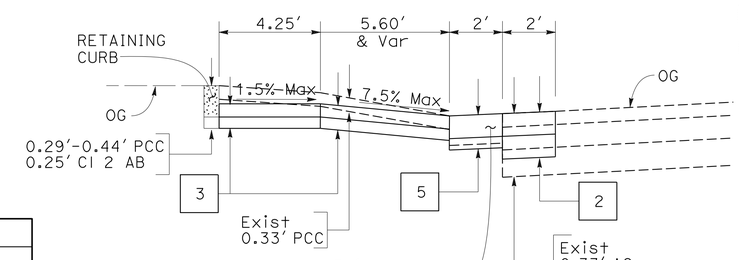

SECTION I-I

CURVE DATA

No. ◉	R	Δ	T	L	N-COORDINATE	E-COORDINATE
4	15.55'	90° 00' 00"	15.55'	24.43'	2117509.53	6065806.17

FOR NOTES, ABBREVIATIONS AND LEGEND, SEE SHEET C-1

CONSTRUCTION DETAILS

NO SCALE

C-6

JF	5-30-16	JAMES CHUANG	VINCE BONNER
REVISED BY	DATE REVISED	CALCULATED-DESIGNED BY	CHECKED BY

FUNCTIONAL SUPERVISOR: RONALD TSUNG

STATE OF CALIFORNIA - DEPARTMENT OF TRANSPORTATION

Caltrans® DESIGN

LAST REVISION 05-23-16 | DATE PLOTTED => 09-AUG-2016 | TIME PLOTTED => 13:16

Dist	COUNTY	ROUTE	POST MILES TOTAL PROJECT	SHEET No.	TOTAL SHEETS
04	Ala	580	41.5	12	123

REGISTERED CIVIL ENGINEER DATE 5-30-16

PLANS APPROVAL DATE 6-7-16

REGISTERED PROFESSIONAL ENGINEER James Chuang No. 74690 Exp. 12-31-17 CIVIL STATE OF CALIFORNIA

THE STATE OF CALIFORNIA OR ITS OFFICERS OR AGENTS SHALL NOT BE RESPONSIBLE FOR THE ACCURACY OR COMPLETENESS OF SCANNED COPIES OF THIS PLAN SHEET.

NOTE:

1. FOR CURB RAMP DETAILS NOT SHOWN, SEE RSP A88A.

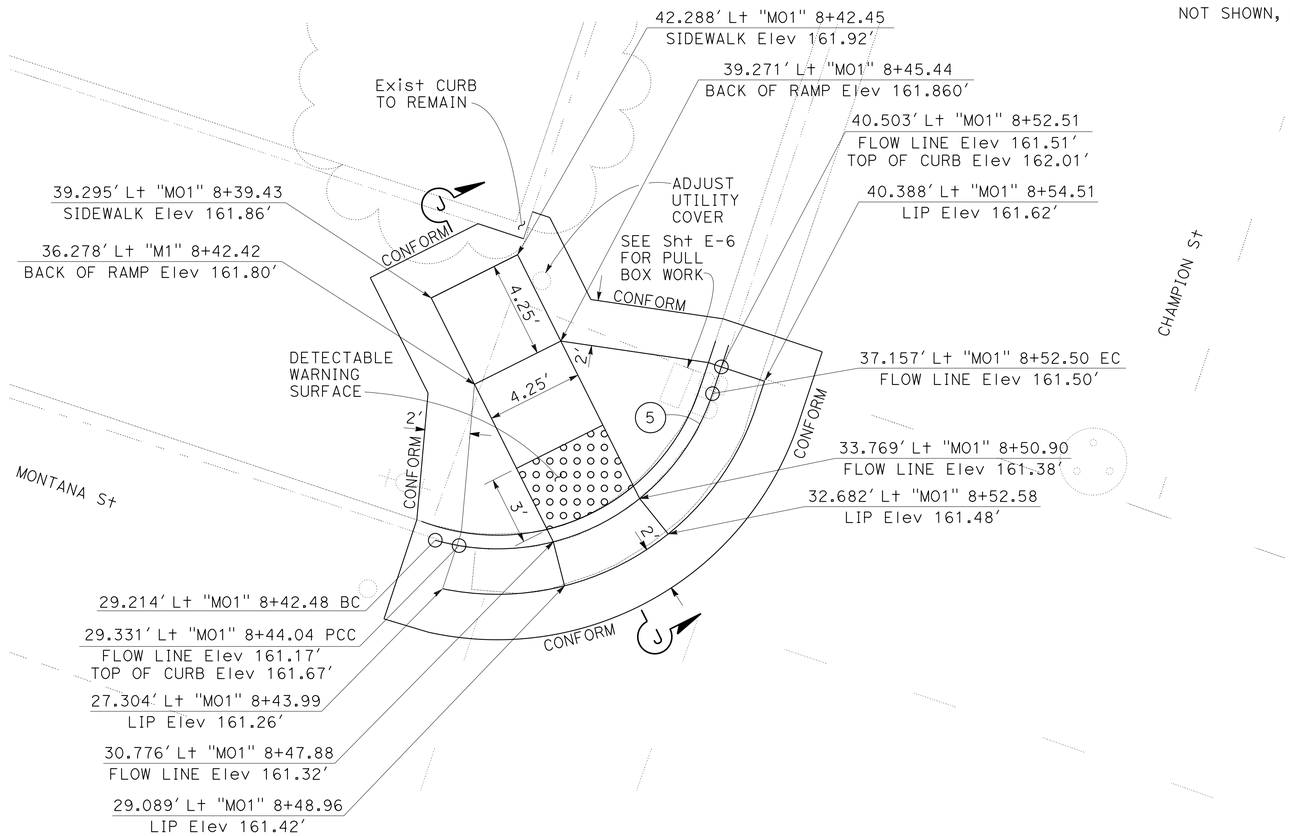

CURB RAMP LOCATION 6

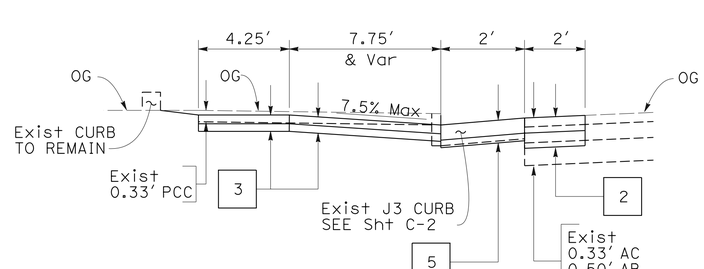

SECTION J-J

CURVE DATA

No. ◉	R	Δ	T	L	N-COORDINATE	E-COORDINATE
5	9.98'	90° 00' 00"	9.98'	15.24'	2117720.49	6066040.33

FOR NOTES, ABBREVIATIONS AND LEGEND, SEE SHEET C-1

CONSTRUCTION DETAILS

NO SCALE

C-7

STATE OF CALIFORNIA - DEPARTMENT OF TRANSPORTATION

Caltrans DESIGN

FUNCTIONAL SUPERVISOR: RONALD TSUNG

CALCULATED-DESIGNED BY: JAMES CHUANG

CHECKED BY: VINCE BONNER

REVISED BY: JF

DATE REVISED: 5-30-16

LAST REVISION 04-28-16

DATE PLOTTED => 09-AUG-2016

TIME PLOTTED => 13:16

Dist	COUNTY	ROUTE	POST MILES TOTAL PROJECT	SHEET No.	TOTAL SHEETS
04	Ala	580	41.5	13	123

REGISTERED CIVIL ENGINEER DATE 5-30-16

PLANS APPROVAL DATE 6-7-16

REGISTERED PROFESSIONAL ENGINEER James Chuang No. 74690 Exp. 12-31-17 CIVIL STATE OF CALIFORNIA

THE STATE OF CALIFORNIA OR ITS OFFICERS OR AGENTS SHALL NOT BE RESPONSIBLE FOR THE ACCURACY OR COMPLETENESS OF SCANNED COPIES OF THIS PLAN SHEET.

NOTES:

1. FOR CURB RAMP DETAILS NOT SHOWN, SEE RSP A88A.
2. FOR SECTION C-C, SEE SHEET C-3.

CURVE DATA

No. ⊛	R	Δ	T	L	N-COORDINATE	E-COORDINATE
6	13.52′	90° 00′ 00″	13.52′	21.24′	2117668.09	6066023.26

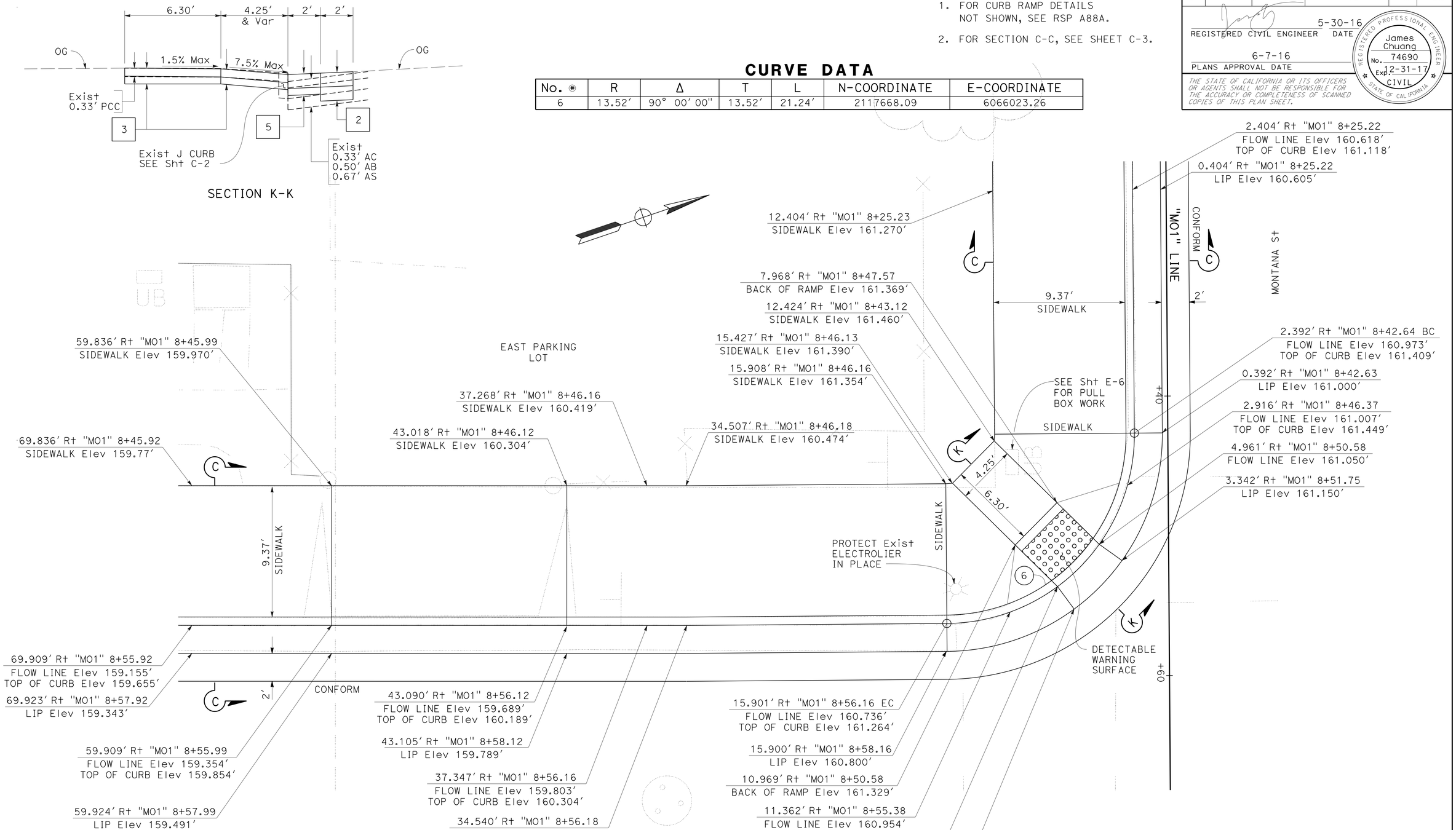

CURB RAMP LOCATION 7

FOR NOTES, ABBREVIATIONS AND LEGEND, SEE SHEET C-1

CONSTRUCTION DETAILS

NO SCALE

C-8

STATE OF CALIFORNIA - DEPARTMENT OF TRANSPORTATION

Caltrans

DESIGN

FUNCTIONAL SUPERVISOR: RONALD TSUNG

CALCULATED-DESIGNED BY: JAMES CHUANG

CHECKED BY: VINCE BONNER

REVISED BY: JF

DATE REVISED: 5-30-16

LAST REVISION 04-28-16

DATE PLOTTED => 09-AUG-2016

TIME PLOTTED => 13:16

Dist	COUNTY	ROUTE	POST MILES TOTAL PROJECT	SHEET No.	TOTAL SHEETS
04	Ala	580	41.5	14	123

REGISTERED CIVIL ENGINEER DATE 5-30-16

PLANS APPROVAL DATE 6-7-16

REGISTERED PROFESSIONAL ENGINEER James Chuang No. 74690 Exp. 12-31-17 CIVIL STATE OF CALIFORNIA

THE STATE OF CALIFORNIA OR ITS OFFICERS OR AGENTS SHALL NOT BE RESPONSIBLE FOR THE ACCURACY OR COMPLETENESS OF SCANNED COPIES OF THIS PLAN SHEET.

NOTES:

1. FOR CURB RAMP DETAILS NOT SHOWN, SEE RSP A88A.
2. FOR SECTION C-C. SEE SHEET C-3.

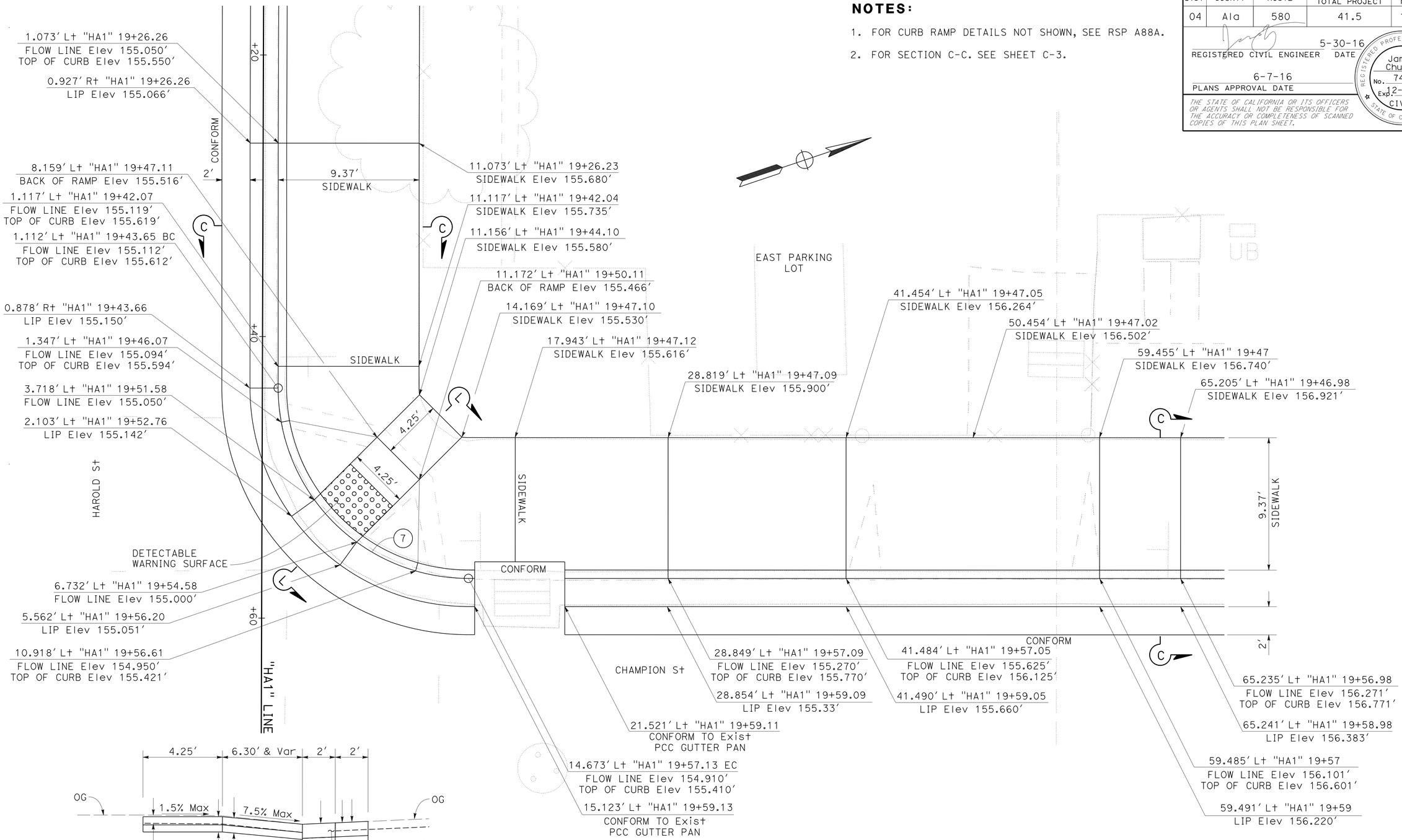

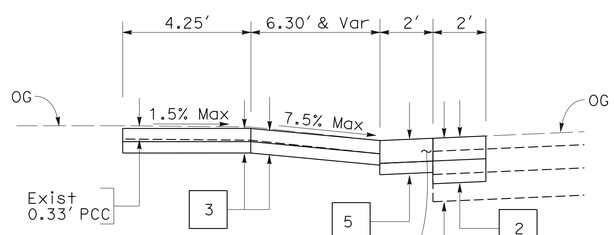

SECTION L-L

CURB RAMP LOCATION 8

CURVE DATA

No. ⊛	R	Δ	T	L	N-COORDINATE	E-COORDINATE
7	13.51'	90° 00' 00"	13.51'	21.23'	2117457.68	6065952.64

FOR NOTES, ABBREVIATIONS AND LEGEND, SEE SHEET C-1

CONSTRUCTION DETAILS

NO SCALE

C-9

REVISED BY	DATE REVISED
JF	5-30-16

CALCULATED-DESIGNED BY: JAMES CHUANG
CHECKED BY: VINCE BONNER
FUNCTIONAL SUPERVISOR: RONALD TSUNG

STATE OF CALIFORNIA - DEPARTMENT OF TRANSPORTATION
Caltrans
DESIGN

LAST REVISION 04-28-16 | DATE PLOTTED => 09-AUG-2016 | TIME PLOTTED => 13:16

Dist	COUNTY	ROUTE	POST MILES TOTAL PROJECT	SHEET No.	TOTAL SHEETS
04	Ala	580	41.5	15	123

REGISTERED CIVIL ENGINEER DATE 5-30-16

PLANS APPROVAL DATE 6-7-16

REGISTERED PROFESSIONAL ENGINEER James Chuang No. 74690 Exp. 12-31-17 CIVIL STATE OF CALIFORNIA

THE STATE OF CALIFORNIA OR ITS OFFICERS OR AGENTS SHALL NOT BE RESPONSIBLE FOR THE ACCURACY OR COMPLETENESS OF SCANNED COPIES OF THIS PLAN SHEET.

NOTE:

1. FOR CURB RAMP DETAILS NOT SHOWN, SEE RSP A88A.
2. FOR PCC CURB (TYPE A2-6) MODIFIED DETAILS IN SECTION R-R NOT SHOWN, SEE RSP A87A.

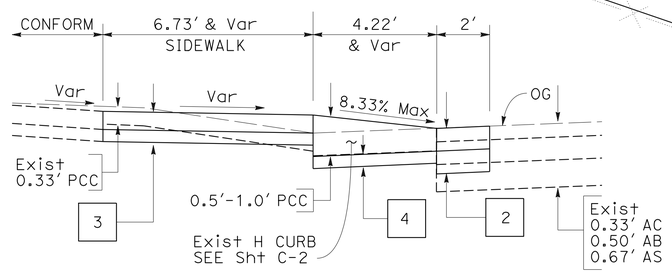

SECTION M-M

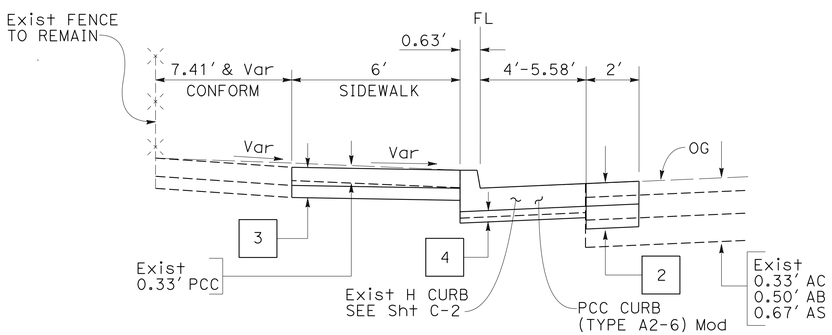

SECTION R-R

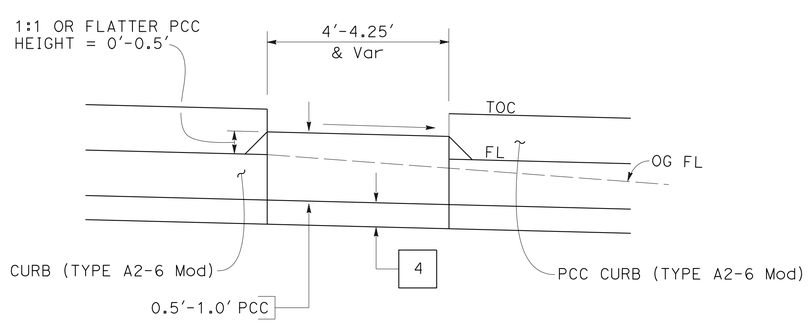

SECTION S-S

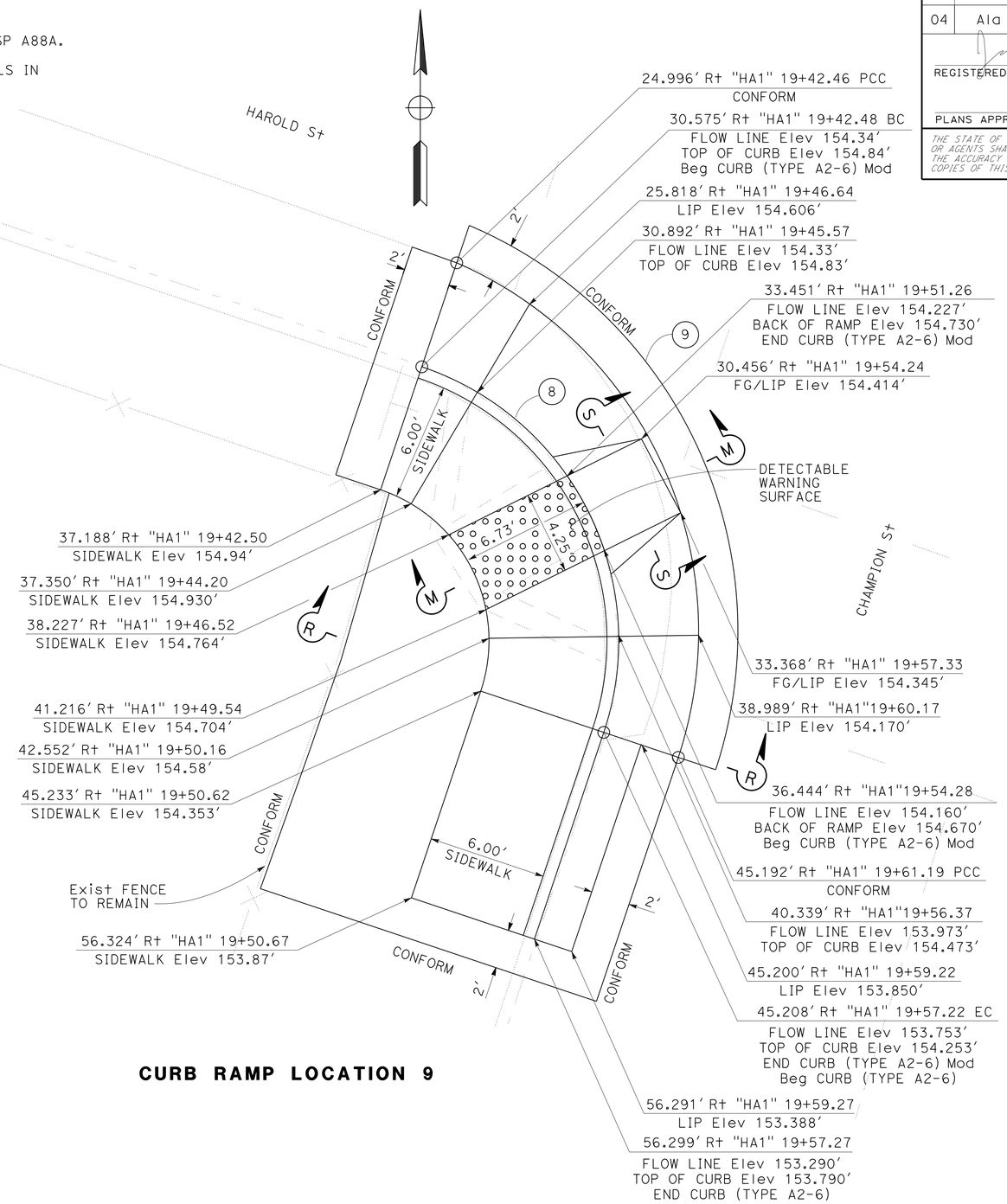

CURB RAMP LOCATION 9

CURVE DATA

No. ⊕	R	Δ	T	L	N	E
8	14.69'	90° 00' 00"	14.69'	23.07'	2117401.31	6065932.35
9	20.44'	84° 50' 45"	18.67'	30.26'	2117401.79	6065930.63

FOR NOTES, ABBREVIATIONS AND LEGEND, SEE SHEET C-1

CONSTRUCTION DETAILS

NO SCALE

C-10

STATE OF CALIFORNIA - DEPARTMENT OF TRANSPORTATION

DESIGN

FUNCTIONAL SUPERVISOR: RONALD TSUNG

CALCULATED-DESIGNED BY: JAMES CHUANG

CHECKED BY: VINCE BONNER

REVISED BY: JF

DATE REVISED: 5-30-16

LAST REVISION 05-24-16

DATE PLOTTED => 09-AUG-2016

TIME PLOTTED => 13:16

Dist	COUNTY	ROUTE	POST MILES TOTAL PROJECT	SHEET No.	TOTAL SHEETS
04	Ala	580	41.5	16	123

REGISTERED CIVIL ENGINEER DATE 5-30-16

PLANS APPROVAL DATE 6-7-16

REGISTERED PROFESSIONAL ENGINEER James Chuang No. 74690 Exp. 12-31-17 CIVIL STATE OF CALIFORNIA

THE STATE OF CALIFORNIA OR ITS OFFICERS OR AGENTS SHALL NOT BE RESPONSIBLE FOR THE ACCURACY OR COMPLETENESS OF SCANNED COPIES OF THIS PLAN SHEET.

NOTES:

1. FOR CURB RAMP DETAILS NOT SHOWN, SEE RSP A88A.
2. FOR SECTION S-S, SEE SHEET C-10.
3. FOR PCC CURB (TYPE A2-6) MODIFIED DETAILS IN SECTION W-W NOT SHOWN, SEE RSP A87A.

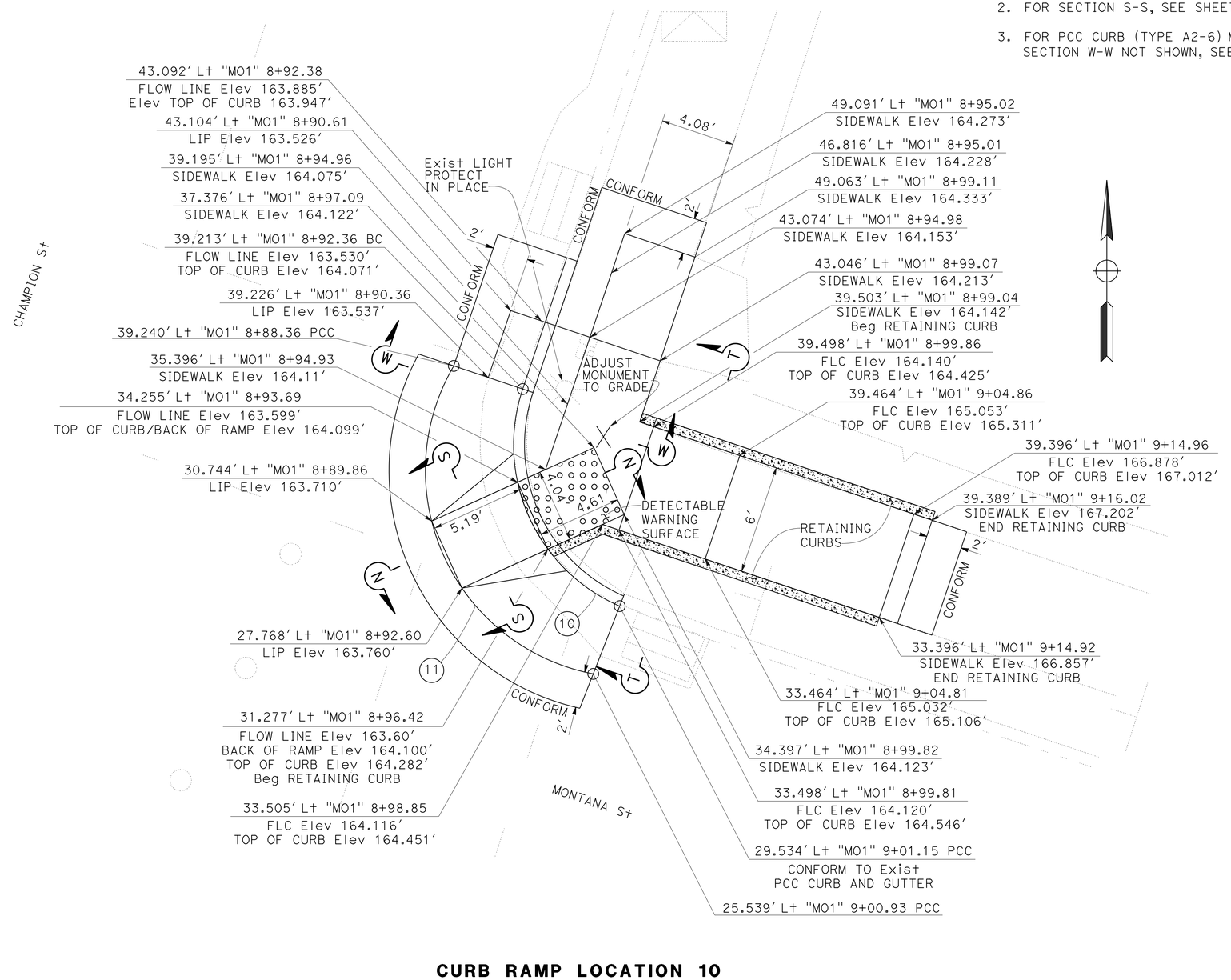

CURB RAMP LOCATION 10

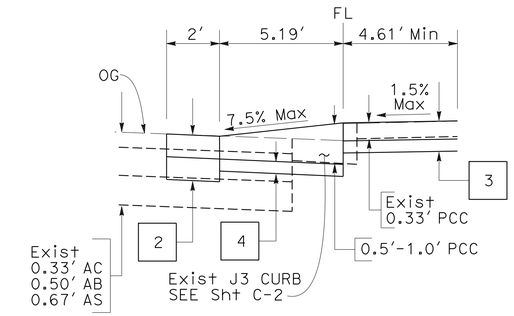

SECTION N-N

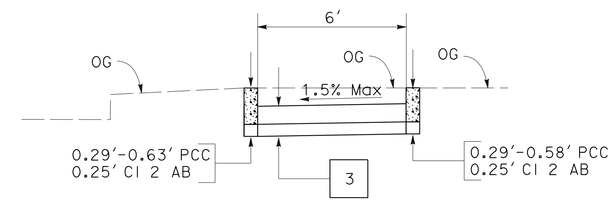

SECTION T-T

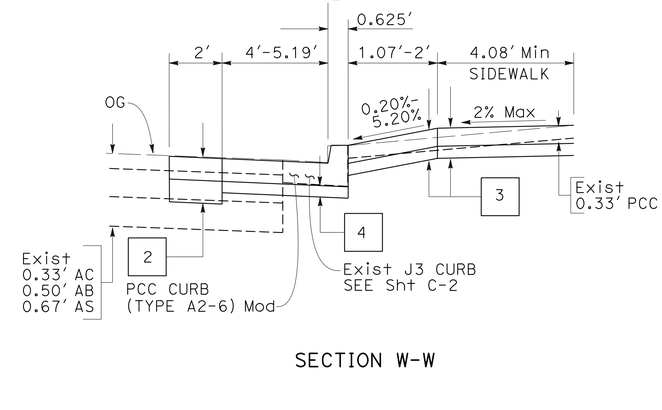

SECTION W-W

CURVE DATA

No. ⊕	R	Δ	T	L	N	E
10	9.65′	85° 18′ 56"	8.89′	14.37′	2117701.88	6066096.83
11	11.39′	109° 28′ 35"	16.11′	21.76′	2117700.47	6066093.72

CONSTRUCTION DETAILS

NO SCALE

FOR NOTES, ABBREVIATIONS AND LEGEND, SEE SHEET C-1

C-11

STATE OF CALIFORNIA - DEPARTMENT OF TRANSPORTATION

Caltrans DESIGN

FUNCTIONAL SUPERVISOR: RONALD TSUNG

CALCULATED-DESIGNED BY: JAMES CHUANG

CHECKED BY: VINCE BONNER

REVISED BY: JF

DATE REVISED: 5-30-16

LAST REVISION 05-24-16

DATE PLOTTED => 09-AUG-2016

TIME PLOTTED => 13:16

Dist	COUNTY	ROUTE	POST MILES TOTAL PROJECT	SHEET No.	TOTAL SHEETS
04	Ala	580	41.5	17	123

REGISTERED CIVIL ENGINEER 5-30-16 DATE

6-7-16
PLANS APPROVAL DATE

REGISTERED PROFESSIONAL ENGINEER James Chuang No. 74690 Exp. 12-31-17 CIVIL STATE OF CALIFORNIA

THE STATE OF CALIFORNIA OR ITS OFFICERS OR AGENTS SHALL NOT BE RESPONSIBLE FOR THE ACCURACY OR COMPLETENESS OF SCANNED COPIES OF THIS PLAN SHEET.

NOTES:

1. FOR CURB RAMP DETAILS NOT SHOWN, SEE RSP A88A.
2. FOR SECTION S-S, SEE SHEET C-10.
3. FOR PCC CURB (TYPE A2-6) MODIFIED DETAILS IN SECTION X-X NOT SHOWN, SEE RSP A87A.

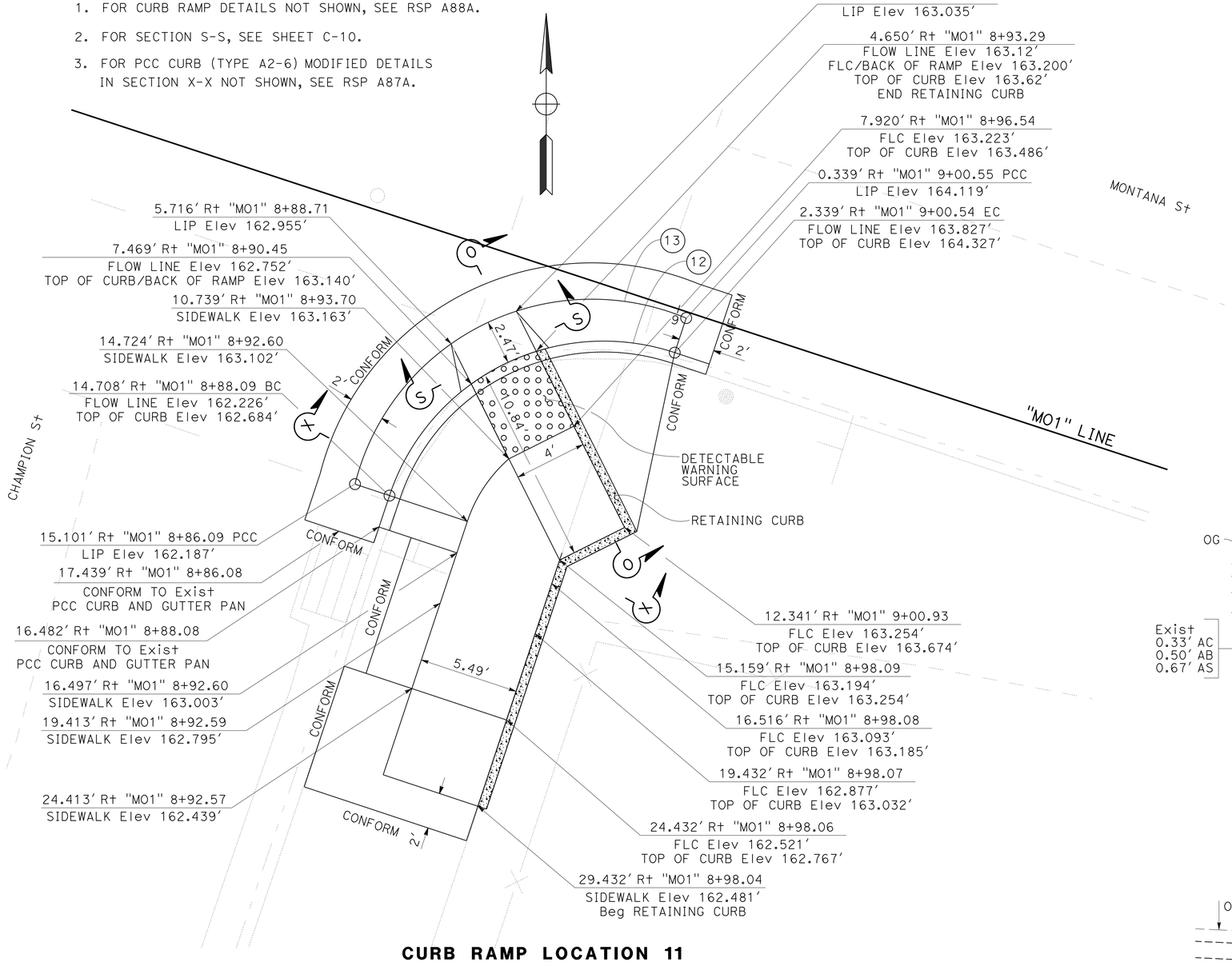

CURB RAMP LOCATION 11

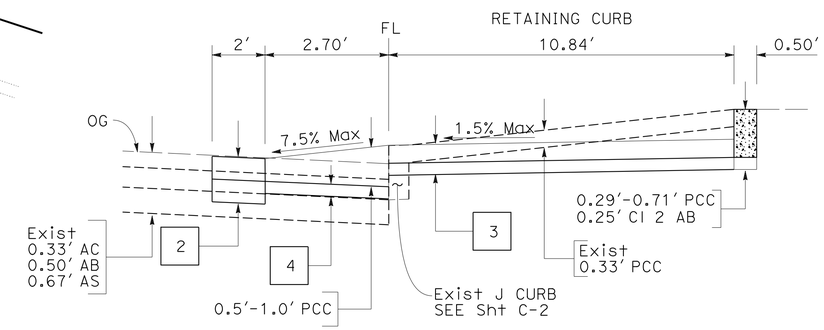

SECTION O-O

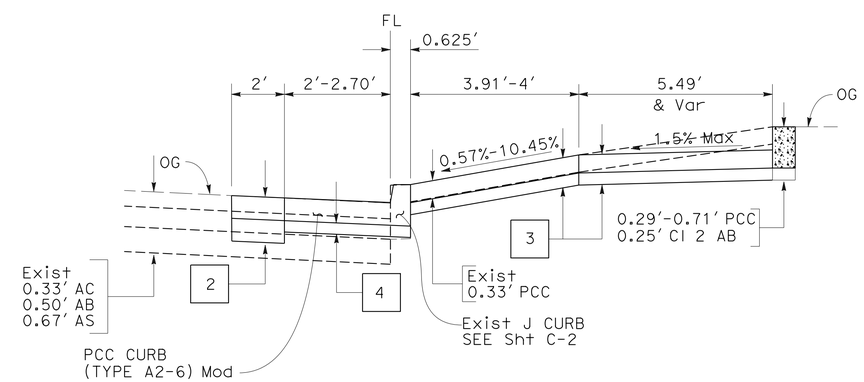

SECTION X-X

CURVE DATA

No. ⊕	R	Δ	T	L	N	E
12	12.41′	90° 00′ 00″	12.41′	19.50′	2117651.15	6066078.59
13	13.43′	98° 40′ 36″	15.64′	23.14′	2117652.43	6066077.95

CONSTRUCTION DETAILS

NO SCALE

FOR NOTES, ABBREVIATIONS AND LEGEND, SEE SHEET C-1

C-12

STATE OF CALIFORNIA - DEPARTMENT OF TRANSPORTATION
Caltrans DESIGN

FUNCTIONAL SUPERVISOR: RONALD TSUNG
CALCULATED-DESIGNED BY: JAMES CHUANG
CHECKED BY: VINCE BONNER
REVISED BY: JF
DATE REVISED: 5-30-16

LAST REVISION 05-24-16
DATE PLOTTED => 09-AUG-2016
TIME PLOTTED => 13:16

Dist	COUNTY	ROUTE	POST MILES TOTAL PROJECT	SHEET No.	TOTAL SHEETS
04	Ala	580	41.5	18	123

REGISTERED CIVIL ENGINEER 5-30-16 DATE

6-7-16
PLANS APPROVAL DATE

REGISTERED PROFESSIONAL ENGINEER James Chuang No. 74690 Exp. 12-31-17 CIVIL STATE OF CALIFORNIA

THE STATE OF CALIFORNIA OR ITS OFFICERS OR AGENTS SHALL NOT BE RESPONSIBLE FOR THE ACCURACY OR COMPLETENESS OF SCANNED COPIES OF THIS PLAN SHEET.

NOTES:

1. FOR CURB RAMP DETAILS NOT SHOWN, SEE RSP A88A.
2. FOR SECTION S-S, SEE SHEET C-10.
3. FOR PCC CURB (TYPE A2-6) MODIFIED DETAILS IN SECTION P-P NOT SHOWN, SEE RSP A87A.

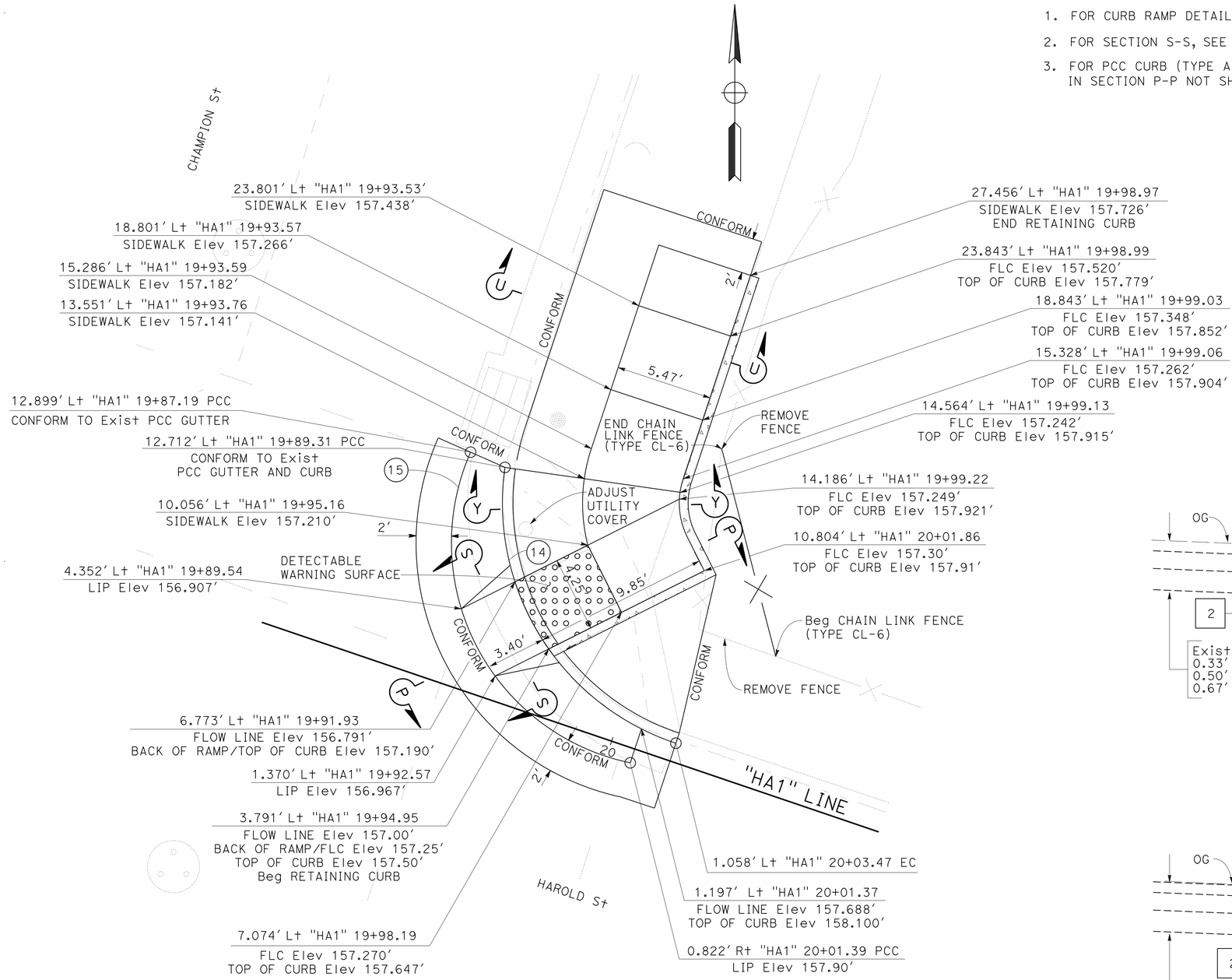

CURB RAMP LOCATION 12

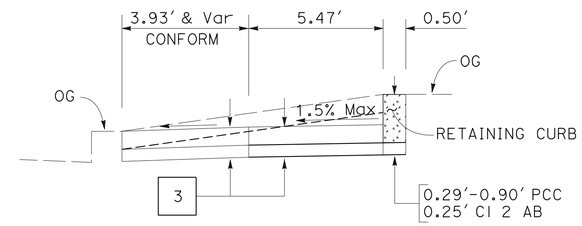

SECTION U-U

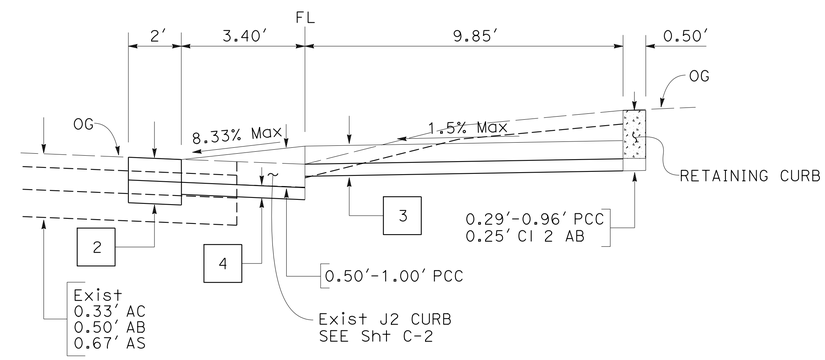

SECTION P-P

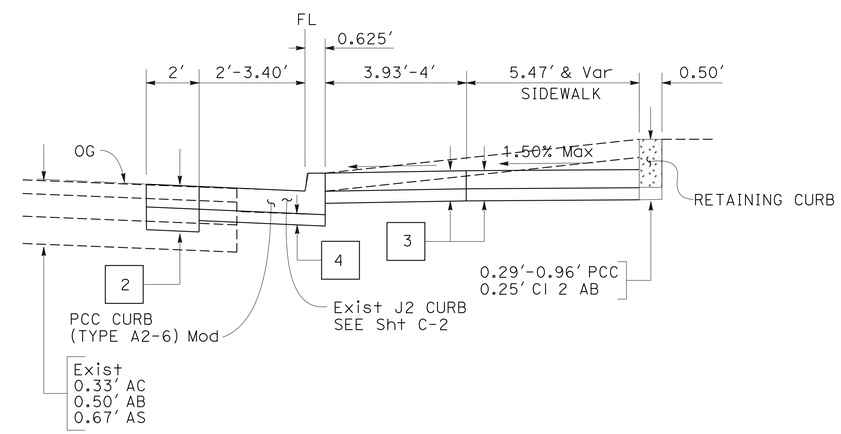

SECTION Y-Y

CURVE DATA

No. ⊕	R	Δ	T	L	N	E
14	14.30'	79° 46' 12"	11.95'	19.92'	2117439.15	6066009.45
15	12.70'	102° 03' 38"	15.70'	22.62'	2117436.89	6066004.96

CONSTRUCTION DETAILS

NO SCALE

FOR NOTES, ABBREVIATIONS AND LEGEND, SEE SHEET C-1

C-13

STATE OF CALIFORNIA - DEPARTMENT OF TRANSPORTATION
DESIGN
FUNCTIONAL SUPERVISOR: RONALD TSUNG
CALCULATED-DESIGNED BY: JAMES CHUANG
CHECKED BY: VINCE BONNER
REVISED BY: JF
DATE REVISED: 5-30-16

LAST REVISION 05-24-16
DATE PLOTTED => 09-AUG-2016
TIME PLOTTED => 10:16

Dist	COUNTY	ROUTE	POST MILES TOTAL PROJECT	SHEET No.	TOTAL SHEETS
04	Ala	580	41.5	19	123

REGISTERED CIVIL ENGINEER DATE 5-30-16

6-7-16
PLANS APPROVAL DATE

REGISTERED PROFESSIONAL ENGINEER James Chuang No. 74690 Exp. 12-31-17 CIVIL STATE OF CALIFORNIA

THE STATE OF CALIFORNIA OR ITS OFFICERS OR AGENTS SHALL NOT BE RESPONSIBLE FOR THE ACCURACY OR COMPLETENESS OF SCANNED COPIES OF THIS PLAN SHEET.

NOTES:

1. FOR CURB RAMP DETAILS NOT SHOWN, SEE RSP A88A.
2. FOR SECTION S-S, SEE SHEET C-10.
3. FOR PCC CURB (TYPE A2-6) MODIFIED DETAILS IN SECTION Z-Z NOT SHOWN, SEE RSP A87A.

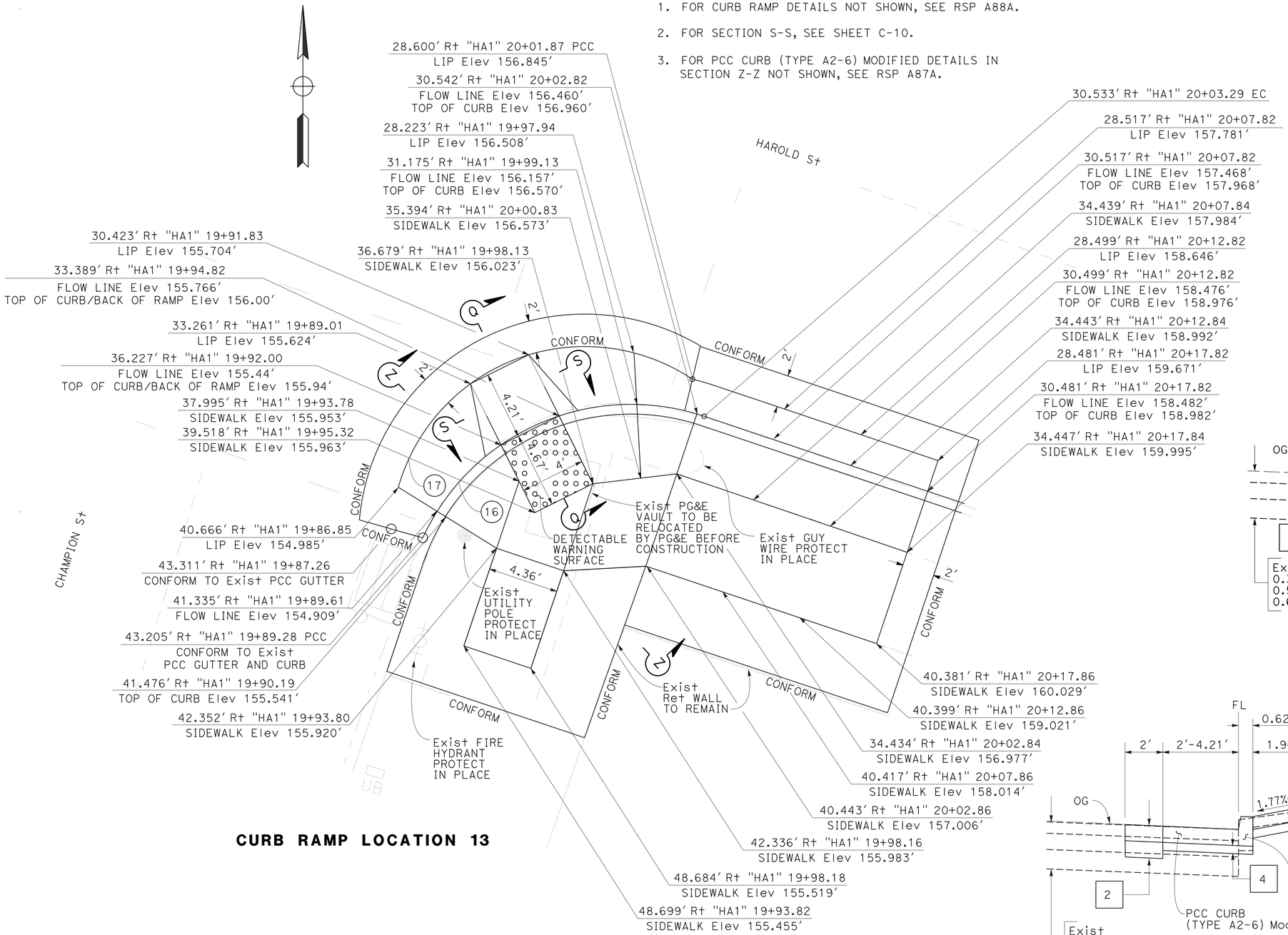

CURB RAMP LOCATION 13

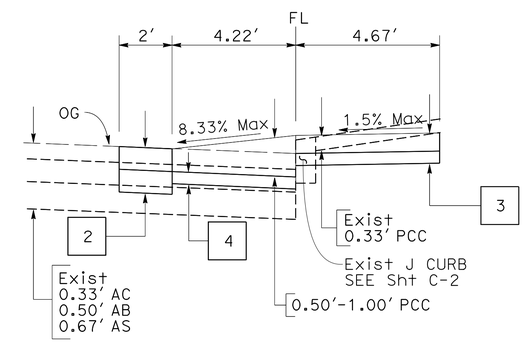

SECTION Q-Q

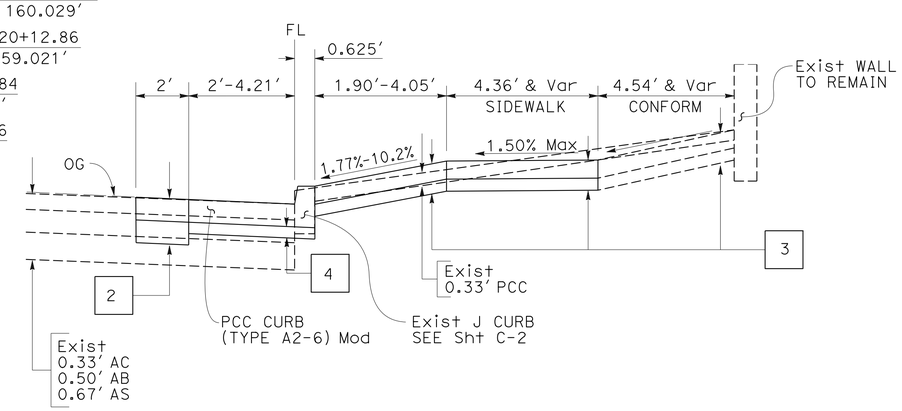

SECTION Z-Z

CURVE DATA

No. ⊕	R	Δ	T	L	N	E
16	14.13'	83° 51' 55"	12.70'	20.69'	2117382.32	6065990.12
17	11.95'	120° 22' 26"	20.85'	25.10'	2117388.07	6065987.26

CONSTRUCTION DETAILS

NO SCALE

FOR NOTES, ABBREVIATIONS AND LEGEND, SEE SHEET C-1

C-14

REVISED BY	DATE REVISED
JF	5-30-16

JAMES CHUANG — VINCE BONNER — CALCULATED-DESIGNED BY — CHECKED BY

FUNCTIONAL SUPERVISOR: RONALD TSUNG

STATE OF CALIFORNIA - DEPARTMENT OF TRANSPORTATION — DESIGN

LAST REVISION 05-03-16 — DATE PLOTTED => 09-AUG-2016 — TIME PLOTTED => 13:16

Dist	COUNTY	ROUTE	POST MILES TOTAL PROJECT	SHEET No.	TOTAL SHEETS
04	Ala	580	41.5	20	123

REGISTERED CIVIL ENGINEER 5-30-16 DATE

6-7-16
PLANS APPROVAL DATE

REGISTERED PROFESSIONAL ENGINEER James Chuang No. 74690 Exp. 12-31-17 CIVIL STATE OF CALIFORNIA

THE STATE OF CALIFORNIA OR ITS OFFICERS OR AGENTS SHALL NOT BE RESPONSIBLE FOR THE ACCURACY OR COMPLETENESS OF SCANNED COPIES OF THIS PLAN SHEET.

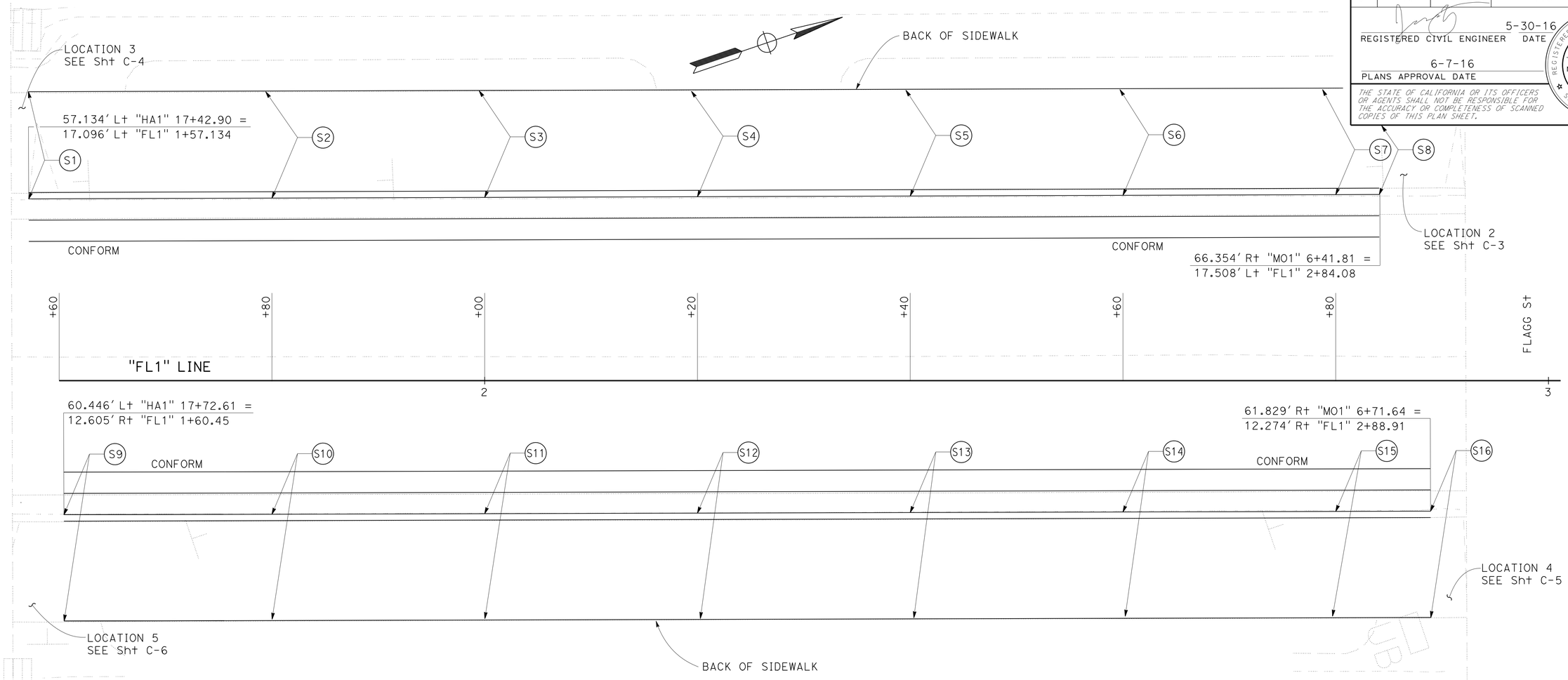

FLAGG AVENUE CURB AND SIDEWALK ELEVATIONS

STATION	CALLOUT No. S	FLOW LINE ELEVATION	FLOW LINE OFFSET (Lt/Rt)	TOP OF CURB ELEVATION	BACK OF SIDEWALK ELEVATION	BACK OF SIDEWALK OFFSET (Lt/Rt)
"FL1" 1+57.13	S1	155.741'	17.096' (Lt)	156.241'	156.390'	27.180' (Lt)
"FL1" 1+80	S2	156.193'	17.170' (Lt)	156.693'	156.844'	27.243' (Lt)
"FL1" 2+00	S3	156.595'	17.235' (Lt)	157.095'	157.246'	27.297' (Lt)
"FL1" 2+20	S4	157.039'	17.300' (Lt)	157.539'	157.690'	27.352' (Lt)
"FL1" 2+40	S5	157.548'	17.365' (Lt)	158.048'	158.199'	27.407' (Lt)
"FL1" 2+60	S6	158.097'	17.430' (Lt)	158.597'	158.747'	27.461' (Lt)
"FL1" 2+80	S7	158.625'	17.494' (Lt)	159.125'	159.275'	27.516' (Lt)
"FL1" 2+84.08	S8	158.736'	17.508' (Rt)	159.237'	159.380'	27.527' (Rt)
"FL1" 1+60.45	S9	155.790'	12.605' (Rt)	156.240'	156.390'	22.605' (Rt)
"FL1" 1+80	S10	156.171'	12.564' (Rt)	156.671'	156.812'	22.564' (Rt)
"FL1" 2+00	S11	156.59'	12.511' (Rt)	157.09'	157.231'	22.511' (Rt)
"FL1" 2+20	S12	157.071'	12.458' (Rt)	157.571'	157.712'	22.458' (Rt)
"FL1" 2+40	S13	157.558'	12.404' (Rt)	158.058'	158.199'	22.404' (Rt)
"FL1" 2+60	S14	158.05'	12.352' (Rt)	158.55'	158.691'	22.352' (Rt)
"FL1" 2+80	S15	158.581'	12.298' (Rt)	159.081'	159.222'	22.298' (Rt)
"FL1" 2+88.91	S16	158.830'	12.274' (Rt)	159.230'	159.450'	22.274' (Rt)

FOR NOTES, ABBREVIATIONS AND LEGEND, SEE SHEET C-1

CONSTRUCTION DETAILS

NO SCALE

C-15

JF	5-30-16
REVISED BY	DATE REVISED
JAMES CHUANG	VINCE BONNER
CALCULATED-DESIGNED BY	CHECKED BY
FUNCTIONAL SUPERVISOR	RONALD TSUNG

STATE OF CALIFORNIA - DEPARTMENT OF TRANSPORTATION

Caltrans® DESIGN

LAST REVISION 04-29-16 | DATE PLOTTED => 09-AUG-2016 TIME PLOTTED => 13:16

Dist	COUNTY	ROUTE	POST MILES TOTAL PROJECT	SHEET No.	TOTAL SHEETS
04	Ala	580	41.5	21	123

REGISTERED CIVIL ENGINEER DATE 5-30-16

PLANS APPROVAL DATE 6-7-16

REGISTERED PROFESSIONAL ENGINEER James Chuang No. 74690 Exp. 12-31-17 CIVIL STATE OF CALIFORNIA

THE STATE OF CALIFORNIA OR ITS OFFICERS OR AGENTS SHALL NOT BE RESPONSIBLE FOR THE ACCURACY OR COMPLETENESS OF SCANNED COPIES OF THIS PLAN SHEET.

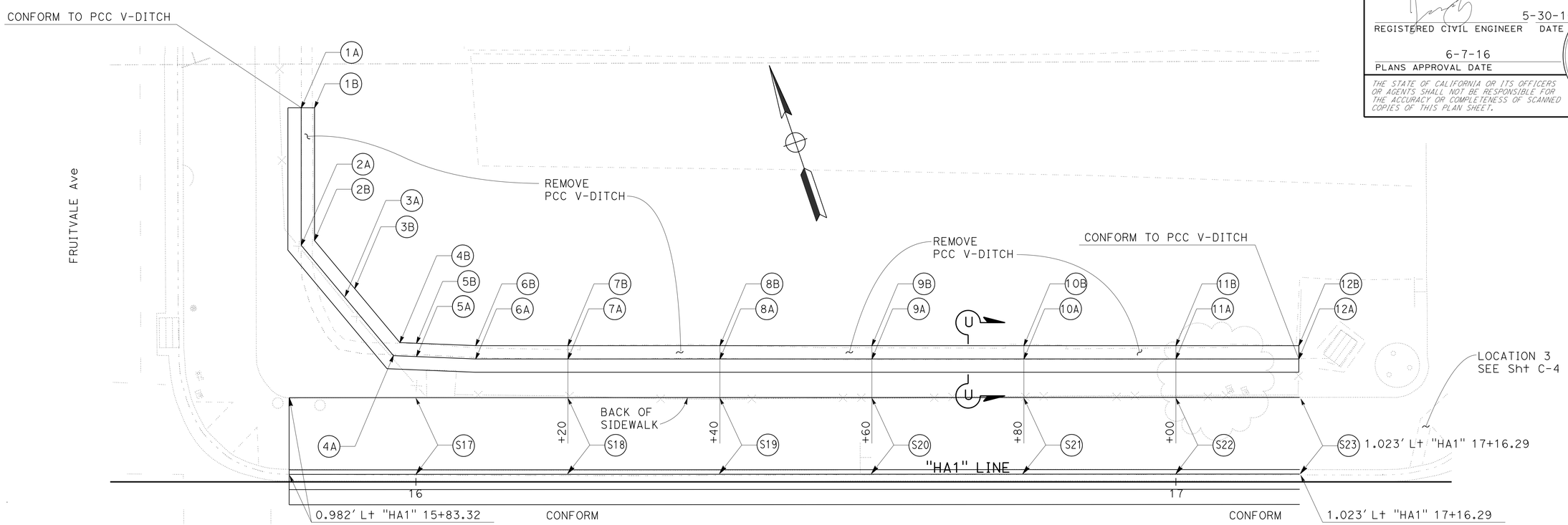

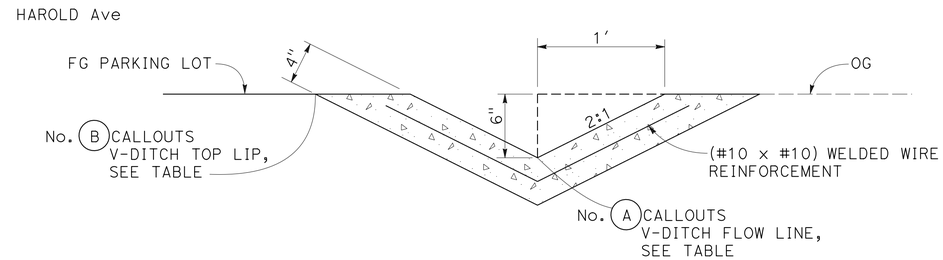

SECTION U-U
PCC V-DITCH TYPICAL SECTION

HAROLD STREET PCC V-DITCH (WEST PARKING LOT) ELEVATIONS

STATION	CALLOUT No. A or B	V-DITCH FLOW LINE "A"		V-DITCH TOP LIP "B"	
		ELEVATION	OFFSET (Lt/Rt)	ELEVATION	OFFSET (Lt/Rt)
"HA1" 15+84.91	1A	CONFORM	49.24' (Lt)		
"HA1" 15+86.66	1B			CONFORM	49.24' (Lt)
"HA1" 15+84.92	2A	156.638'	31.14' (Lt)		
"HA1" 15+86.67	2B			157.138'	31.78' (Lt)
"HA1" 15+90.61	3A	156.43'	24.31' (Lt)		
"HA1" 15+91.95	3B			156.93'	25.44' (Lt)
"HA1" 15+97.04	4A	156.20'	16.62' (Lt)		
"HA1" 15+97.89	4B			156.70'	18.33' (Lt)
"HA1" 16+00.01	5A	156.13'	16.50' (Lt)		
"HA1" 16+00.08	5B			156.63'	18.25' (Lt)
"HA1" 16+07.83	6A	155.93'	16.13' (Lt)		
"HA1" 16+07.87	6B			156.43'	17.93' (Lt)
"HA1" 16+20	7A & 7B	155.80'	16.18' (Lt)	156.30'	17.93' (Lt)
"HA1" 16+40	8A & 8B	155.58'	16.18' (Lt)	156.08'	17.93' (Lt)
"HA1" 16+60	9A & 9B	155.25'	16.18' (Lt)	155.75'	17.93' (Lt)
"HA1" 16+80	10A & 10B	155.06'	16.18' (Lt)	155.56'	17.93' (Lt)
"HA1" 17+00	11A & 11B	155'	16.18' (Lt)	155.50'	17.93' (Lt)
"HA1" 17+16.17	12A & 12B	CONFORM	16.18' (Lt)	CONFORM	17.93' (Lt)

HAROLD STREET CURB AND SIDEWALK (WEST PARKING LOT) ELEVATIONS

STATION	CALLOUT No. S	FLOW LINE ELEVATION	FLOW LINE OFFSET (Lt/Rt)	TOP OF CURB ELEVATION	BACK OF SIDEWALK ELEVATION	BACK OF SIDEWALK OFFSET (Lt/Rt)
"HA1" 15+83.32		CONFORM	0.982' (Lt)	CONFORM	CONFORM	11.082' (Lt)
"HA1" 16+00	S17	155.642'	0.988' (Lt)	156.142'	156.285'	11.088' (Lt)
"HA1" 16+20	S18	155.571'	0.994' (Lt)	156.071'	156.214'	11.094' (Lt)
"HA1" 16+40	S19	155.424'	1.000' (Lt)	155.924'	156.067'	11.100' (Lt)
"HA1" 16+60	S20	155.242'	1.006' (Lt)	155.742'	155.885'	11.106' (Lt)
"HA1" 16+80	S21	155.190'	1.012' (Lt)	155.690'	155.833'	11.112' (Lt)
"HA1" 17+00	S22	155.136'	1.018' (Lt)	155.636'	155.779'	11.118' (Lt)
"HA1" 17+16.29	S23	154.872'	1.023' (Lt)	155.372'	155.512'	11.123' (Lt)

CONSTRUCTION DETAILS

NO SCALE

FOR NOTES, ABBREVIATIONS AND LEGEND, SEE SHEET C-1

C-16

STATE OF CALIFORNIA - DEPARTMENT OF TRANSPORTATION
Caltrans DESIGN
FUNCTIONAL SUPERVISOR RONALD TSUNG
CALCULATED-DESIGNED BY JAMES CHUANG
CHECKED BY VINCE BONNER
REVISED BY JF
DATE REVISED 5-30-16

LAST REVISION 04-29-16
DATE PLOTTED => 09-AUG-2016
TIME PLOTTED => 13:16

Dist	COUNTY	ROUTE	POST MILES TOTAL PROJECT	SHEET No.	TOTAL SHEETS
04	Ala	580	41.5	22	123

REGISTERED CIVIL ENGINEER 5-30-16 DATE

6-7-16
PLANS APPROVAL DATE

REGISTERED PROFESSIONAL ENGINEER James Chuang No. 74690 Exp. 12-31-17 CIVIL STATE OF CALIFORNIA

THE STATE OF CALIFORNIA OR ITS OFFICERS OR AGENTS SHALL NOT BE RESPONSIBLE FOR THE ACCURACY OR COMPLETENESS OF SCANNED COPIES OF THIS PLAN SHEET.

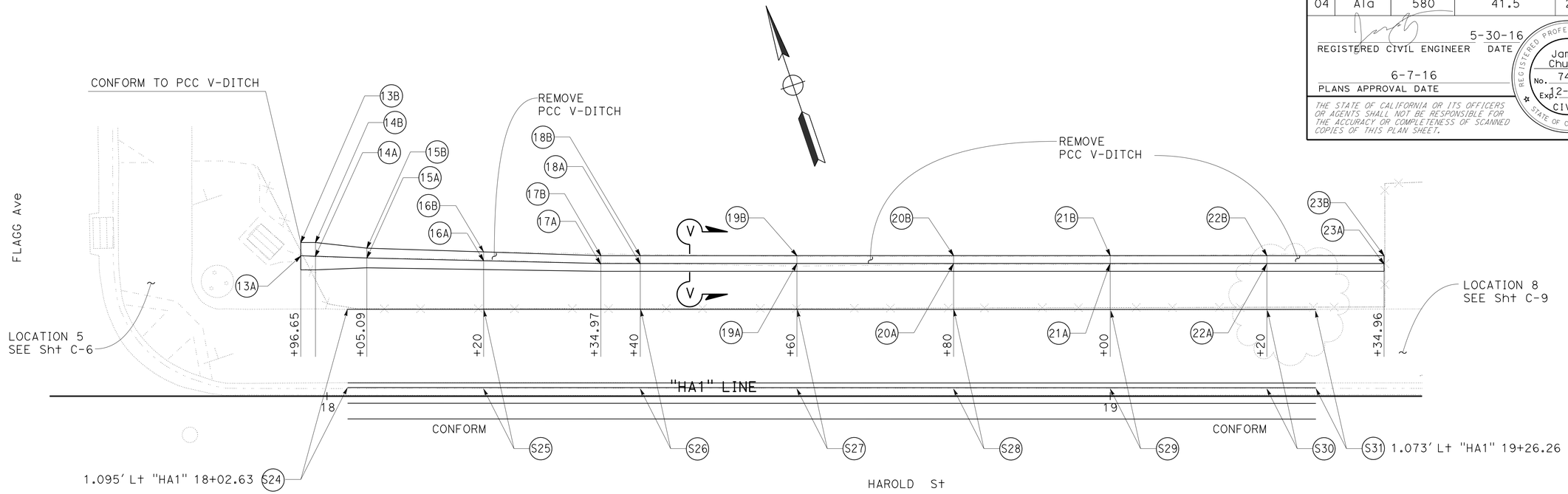

HAROLD STREET PCC V-DITCH (EAST PARKING LOT) ELEVATIONS

STATION	CALLOUT No. A or B	V-DITCH TOP LIP "A"		V-DITCH FLOW LINE "B"	
		ELEVATION	OFFSET (Lt/Rt)	ELEVATION	OFFSET (Lt/Rt)
"HA1" 17+96.65	13A & 13B	CONFORM	19.621' (Lt)	CONFORM	17.869' (Lt)
"HA1" 17+98.53	14A & 14B	155.318'	19.618' (Lt)	154.818'	17.869' (Lt)
"HA1" 18+05.09	15A & 15B	155.356'	18.899' (Lt)	154.856'	17.645' (Lt)
"HA1" 18+20	16A & 16B	155.442'	18.422' (Lt)	154.942'	17.295' (Lt)
"HA1" 18+34.97	17A & 17B	155.528'	17.943' (Lt)	155.028'	16.943' (Lt)
"HA1" 18+40	18A & 18B	155.557'	17.943' (Lt)	155.057'	16.943' (Lt)
"HA1" 18+60	19A & 19B	155.672'	17.943' (Lt)	155.172'	16.943' (Lt)
"HA1" 18+80	20A & 20B	155.787'	17.943' (Lt)	155.287'	16.943' (Lt)
"HA1" 19+00	21A & 21B	155.902'	17.943' (Lt)	155.402'	16.943' (Lt)
"HA1" 19+20	22A & 22B	156.017'	17.943' (Lt)	155.517'	16.943' (Lt)
"HA1" 19+34.96	23A & 22B	CONFORM	17.943' (Lt)	CONFORM	16.943' (Lt)

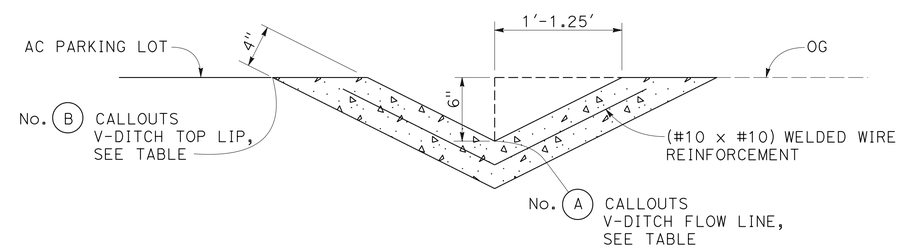

SECTION V-V
PCC V-DITCH TYPICAL SECTION

HAROLD STREET CURB AND SIDEWALK (EAST PARKING LOT) ELEVATIONS

STATION	CALLOUT No. S	FLOW LINE ELEVATION	FLOW LINE OFFSET (Lt/Rt)	TOP OF CURB ELEVATION	BACK OF SIDEWALK ELEVATION	BACK OF SIDEWALK OFFSET (Lt/Rt)
"HA1" 18+02.63	S24	154.79'	1.095' (Lt)	155.29'	155.450'	11.095' (Lt)
"HA1" 18+20	S25	154.856'	1.092' (Lt)	155.356'	155.506'	11.092' (Lt)
"HA1" 18+40	S26	154.918'	1.089' (Lt)	155.418'	155.568'	11.089' (Lt)
"HA1" 18+60	S27	154.953'	1.085' (Lt)	155.453'	155.603'	11.085' (Lt)
"HA1" 18+80	S28	154.95'	1.081' (Lt)	155.45'	155.600'	11.081' (Lt)
"HA1" 19+00	S29	154.96'	1.078' (Lt)	155.46'	155.610'	11.078' (Lt)
"HA1" 19+20	S30	155.033'	1.074' (Lt)	155.533'	155.683'	11.074' (Lt)
"HA1" 19+26.26	S31	155.05'	1.073' (Lt)	155.55'	155.700'	11.073' (Lt)

FOR NOTES, ABBREVIATIONS AND LEGEND, SEE SHEET C-1

CONSTRUCTION DETAILS
NO SCALE

C-17

STATE OF CALIFORNIA - DEPARTMENT OF TRANSPORTATION
Caltrans
DESIGN
FUNCTIONAL SUPERVISOR RONALD TSUNG
CALCULATED-DESIGNED BY JAMES CHUANG
CHECKED BY VINCE BONNER
REVISED BY JF
DATE REVISED 5-30-16

LAST REVISION 05-24-16
DATE PLOTTED => 09-AUG-2016
TIME PLOTTED => 13:16

Dist	COUNTY	ROUTE	POST MILES TOTAL PROJECT	SHEET No.	TOTAL SHEETS
04	Ala	580	41.5	23	123

REGISTERED CIVIL ENGINEER 5-30-16 DATE

6-7-16
PLANS APPROVAL DATE

REGISTERED PROFESSIONAL ENGINEER James Chuang No. 74690 Exp. 12-31-17 CIVIL STATE OF CALIFORNIA

THE STATE OF CALIFORNIA OR ITS OFFICERS OR AGENTS SHALL NOT BE RESPONSIBLE FOR THE ACCURACY OR COMPLETENESS OF SCANNED COPIES OF THIS PLAN SHEET.

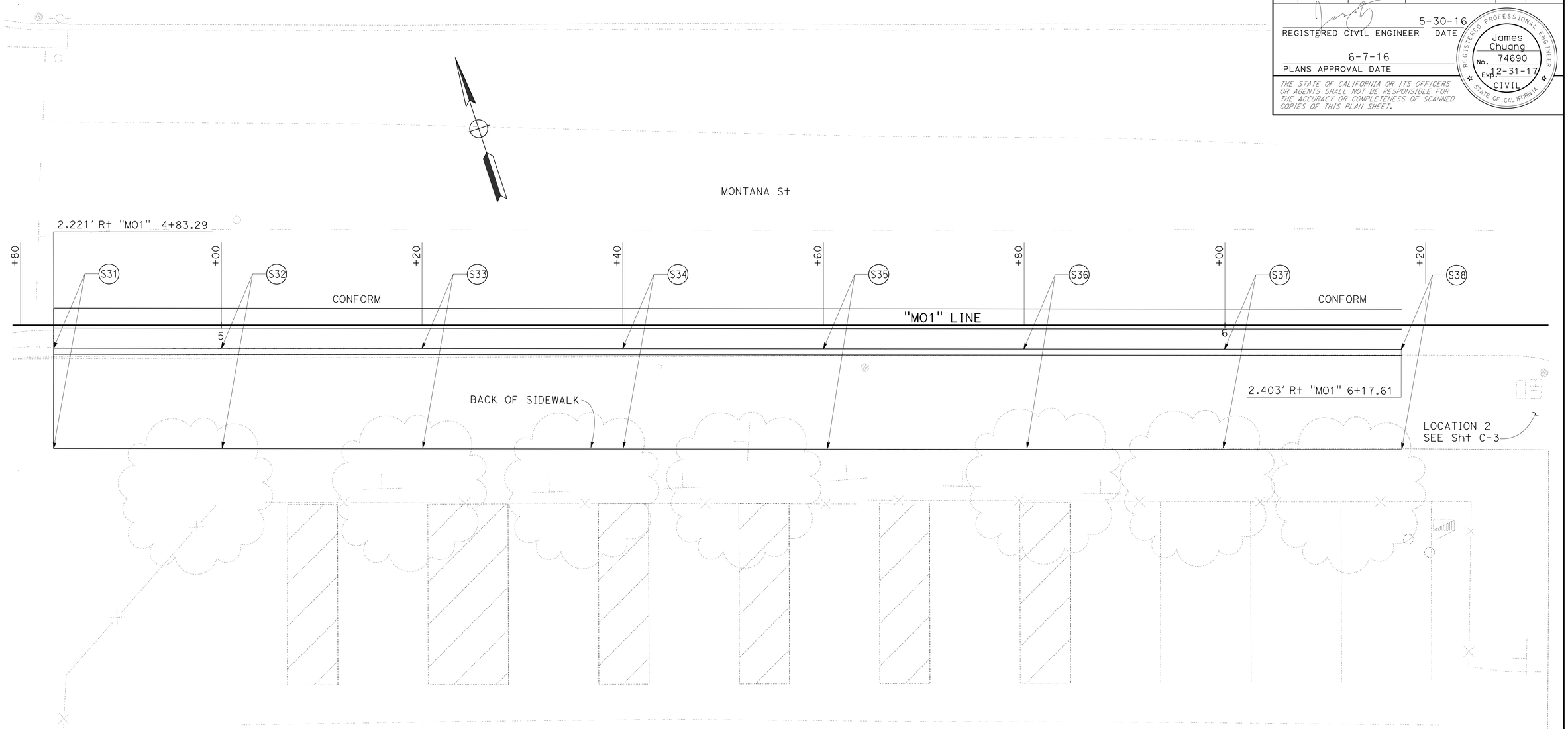

MONTANA STREET CURB AND SIDEWALK (WEST PARKING LOT) ELEVATIONS

STATION	CALLOUT No. S	FLOW LINE ELEVATION	FLOW LINE OFFSET (Lt/Rt)	TOP OF CURB ELEVATION	BACK OF SIDEWALK ELEVATION	BACK OF SIDEWALK OFFSET (Lt/Rt)
"MO1" 4+83.29	S31	CONFORM	2.221' (Rt)	CONFORM	CONFORM	13.362' (Rt)
"MO1" 5+00	S32	160.02'	2.302' (Rt)	160.52'	160.661'	12.302' (Rt)
"MO1" 5+20	S33	160.04'	2.320' (Rt)	160.54'	160.681'	12.32' (Rt)
"MO1" 5+40	S34	160.05'	2.337' (Rt)	160.55'	160.691'	12.337' (Rt)
"MO1" 5+60	S35	160.06'	2.354' (Rt)	160.56'	160.701'	12.354' (Rt)
"MO1" 5+80	S36	160.071'	2.371' (Rt)	160.571'	160.712'	12.371' (Rt)
"MO1" 6+00	S37	160.109'	2.388' (Rt)	160.609'	160.750'	12.388' (Rt)
"MO1" 6+17.61	S38	160.13'	2.403' (Rt)	160.63'	160.631'	12.403' (Rt)

FOR NOTES, ABBREVIATIONS AND LEGEND, SEE SHEET C-1

CONSTRUCTION DETAILS

NO SCALE

C-18

STATE OF CALIFORNIA - DEPARTMENT OF TRANSPORTATION
Caltrans
DESIGN

FUNCTIONAL SUPERVISOR: RONALD TSUNG

CALCULATED-DESIGNED BY: JAMES CHUANG
CHECKED BY: VINCE BONNER

REVISED BY: JF
DATE REVISED: 5-30-16

LAST REVISION DATE PLOTTED => 09-AUG-2016
TIME PLOTTED => 13:16
04-29-16

Dist	COUNTY	ROUTE	POST MILES TOTAL PROJECT	SHEET No.	TOTAL SHEETS
04	Ala	580	41.5	24	123

REGISTERED CIVIL ENGINEER DATE 5-30-16

PLANS APPROVAL DATE 6-7-16

REGISTERED PROFESSIONAL ENGINEER James Chuang No. 74690 Exp. 12-31-17 CIVIL STATE OF CALIFORNIA

THE STATE OF CALIFORNIA OR ITS OFFICERS OR AGENTS SHALL NOT BE RESPONSIBLE FOR THE ACCURACY OR COMPLETENESS OF SCANNED COPIES OF THIS PLAN SHEET.

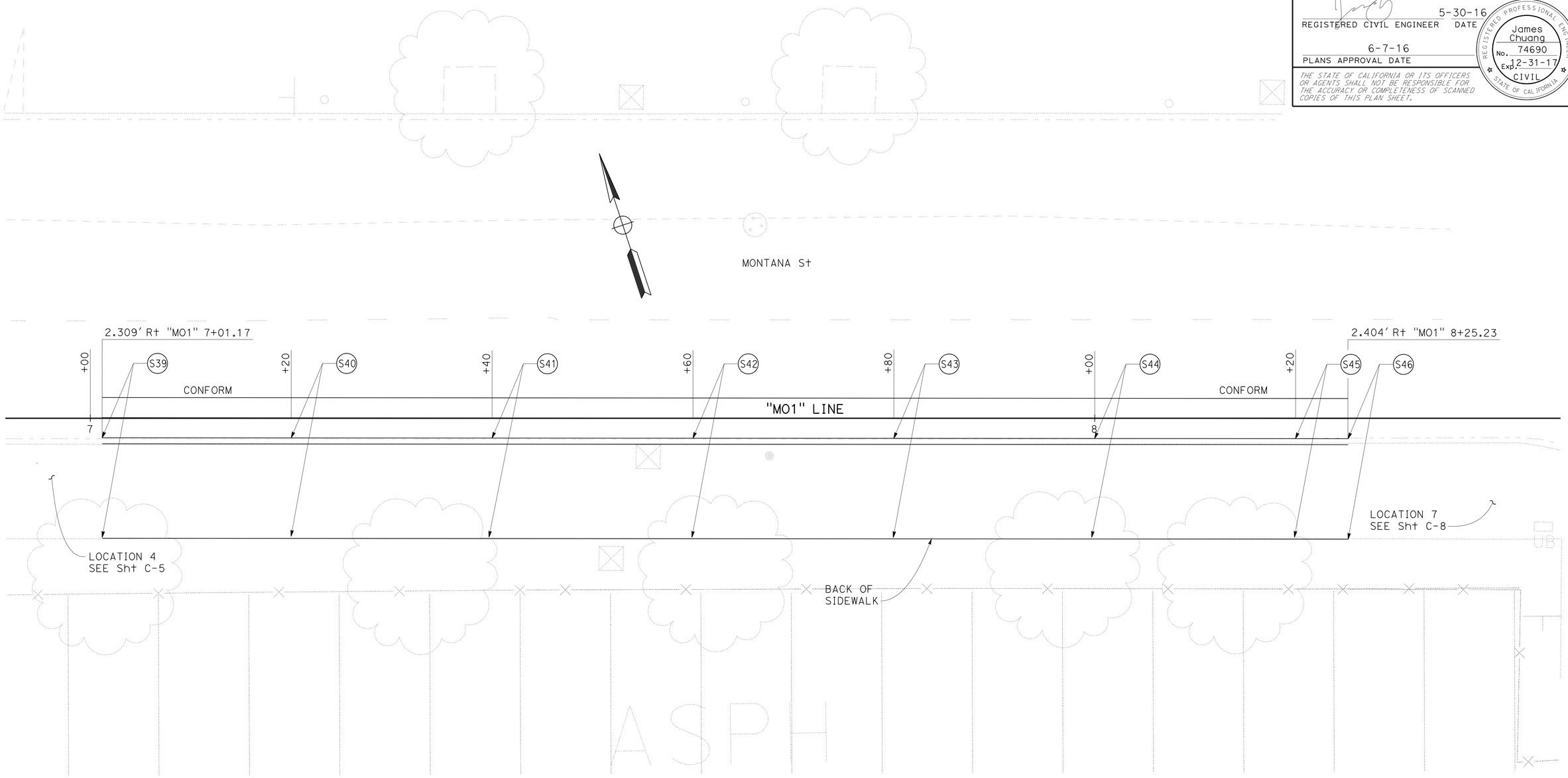

MONTANA STREET CURB AND SIDEWALK (EAST PARKING LOT) ELEVATIONS

STATION	CALLOUT No. S	FLOW LINE ELEVATION	FLOW LINE OFFSET (Lt/Rt)	TOP OF CURB ELEVATION	BACK OF SIDEWALK ELEVATION	BACK OF SIDEWALK OFFSET (Lt/Rt)
"MO1" 7+01.17	S39	160.044'	2.309' (Rt)	160.544'	160.590'	12.309' (Rt)
"MO1" 7+20	S40	160.096'	2.323' (Rt)	160.596'	160.737'	12.323' (Rt)
"MO1" 7+40	S41	160.174'	2.338' (Rt)	160.674'	160.815'	12.338' (Rt)
"MO1" 7+60	S42	160.217'	2.354' (Rt)	160.717'	160.858'	12.354' (Rt)
"MO1" 7+80	S43	160.24'	2.369' (Rt)	160.74'	160.881'	12.369' (Rt)
"MO1" 8+00	S44	160.299'	2.384' (Rt)	160.799'	160.940'	12.384' (Rt)
"MO1" 8+20	S45	160.552'	2.400' (Rt)	161.052'	161.200'	12.400' (Rt)
"MO1" 8+25.23	S46	160.618'	2.404' (Rt)	161.118'	161.270'	12.404' (Rt)

FOR NOTES, ABBREVIATIONS AND LEGEND, SEE SHEET C-1

CONSTRUCTION DETAILS

NO SCALE

C-19

STATE OF CALIFORNIA - DEPARTMENT OF TRANSPORTATION

Caltrans

DESIGN

FUNCTIONAL SUPERVISOR: RONALD TSUNG

CALCULATED-DESIGNED BY: JAMES CHUANG

CHECKED BY: VINCE BONNER

REVISED BY: JF

DATE REVISED: 5-30-16

LAST REVISION 04-29-16 | DATE PLOTTED => 09-AUG-2016 | TIME PLOTTED => 13:16

Dist	COUNTY	ROUTE	POST MILES TOTAL PROJECT	SHEET No.	TOTAL SHEETS
04	Ala	580	41.5	25	123

REGISTERED CIVIL ENGINEER DATE 5-30-16

PLANS APPROVAL DATE 6-7-16

REGISTERED PROFESSIONAL ENGINEER James Chuang No. 74690 Exp. 12-31-17 CIVIL STATE OF CALIFORNIA

THE STATE OF CALIFORNIA OR ITS OFFICERS OR AGENTS SHALL NOT BE RESPONSIBLE FOR THE ACCURACY OR COMPLETENESS OF SCANNED COPIES OF THIS PLAN SHEET.

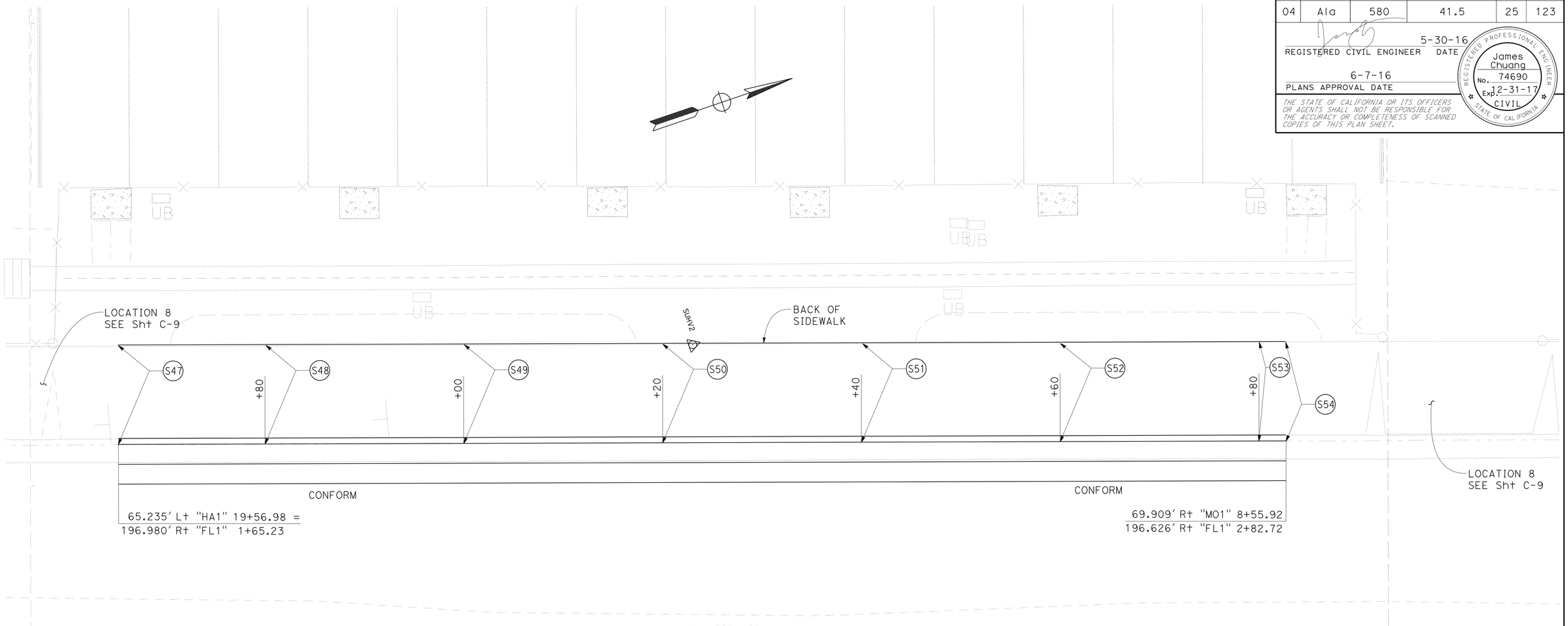

CHAMPION AVENUE CURB AND SIDEWALK (EAST PARKING LOT) ELEVATIONS

STATION	CALLOUT No. S	FLOW LINE ELEVATION	FLOW LINE OFFSET (Lt/Rt)	TOP OF CURB ELEVATION	BACK OF SIDEWALK ELEVATION	BACK OF SIDEWALK OFFSET (Lt/Rt)
"FL1" 1+65.23	S47	156.271'	196.980' (Rt)	156.771'	156.921'	186.980' (Rt)
"FL1" 1+80	S48	156.722'	196.935' (Rt)	157.222'	157.363'	186.935' (Rt)
"FL1" 2+00	S49	157.257'	196.875' (Rt)	157.757'	157.898'	186.875' (Rt)
"FL1" 2+20	S50	157.806'	196.815' (Rt)	158.306'	158.447'	186.815' (Rt)
"FL1" 2+40	S51	158.351'	196.754' (Rt)	158.851'	158.992'	186.754' (Rt)
"FL1" 2+60	S52	158.737'	196.694' (Rt)	159.237'	159.378'	186.694' (Rt)
"FL1" 2+80	S53	159.092'	196.634' (Rt)	159.592'	159.733'	186.634' (Rt)
"FL1" 2+82.72	S54	159.155'	196.626' (Rt)	159.655'	159.77'	186.626' (Rt)

FOR NOTES, ABBREVIATIONS AND LEGEND, SEE SHEET C-1

CONSTRUCTION DETAILS

NO SCALE

C-20

REVISED BY	JF
DATE REVISED	5-30-16
JAMES CHUANG	
VINCE BONNER	
CALCULATED-DESIGNED BY	
CHECKED BY	
FUNCTIONAL SUPERVISOR	
RONALD TSUNG	

STATE OF CALIFORNIA - DEPARTMENT OF TRANSPORTATION

Caltrans DESIGN

LAST REVISION 04-29-16 DATE PLOTTED => 09-AUG-2016 TIME PLOTTED => 13:16

Dist	COUNTY	ROUTE	POST MILES TOTAL PROJECT	SHEET No.	TOTAL SHEETS
04	Ala	580	41.5	26	123

REGISTERED CIVIL ENGINEER DATE 5-27-16

PLANS APPROVAL DATE 6-7-16

REGISTERED PROFESSIONAL ENGINEER Jiangfan Chen No. 77248 Exp. 6-30-17 CIVIL STATE OF CALIFORNIA

THE STATE OF CALIFORNIA OR ITS OFFICERS OR AGENTS SHALL NOT BE RESPONSIBLE FOR THE ACCURACY OR COMPLETENESS OF SCANNED COPIES OF THIS PLAN SHEET.

TEMPORARY WATER POLLUTION CONTROL PLAN

NO SCALE

WPC-1

REVISED BY	JC
DATE REVISED	12-10-15
JENNIFER CHEN	
KAMRAN NAKHJIRI	
CALCULATED-DESIGNED BY	
CHECKED BY	
FUNCTIONAL SUPERVISOR	
KAMRAN NAKHJIRI	

STATE OF CALIFORNIA - DEPARTMENT OF TRANSPORTATION

Caltrans® **WATER QUALITY**

LAST REVISION 12-10-15 | DATE PLOTTED => 09-AUG-2016 | TIME PLOTTED => 13:16

Dist	COUNTY	ROUTE	POST MILES TOTAL PROJECT	SHEET No.	TOTAL SHEETS
04	Ala	580	41.5	27	123

REGISTERED CIVIL ENGINEER 5-27-16 DATE

6-7-16
PLANS APPROVAL DATE

REGISTERED PROFESSIONAL ENGINEER
Jiangfan Chen
No. 77248
Exp. 6-30-17
CIVIL
STATE OF CALIFORNIA

THE STATE OF CALIFORNIA OR ITS OFFICERS OR AGENTS SHALL NOT BE RESPONSIBLE FOR THE ACCURACY OR COMPLETENESS OF SCANNED COPIES OF THIS PLAN SHEET.

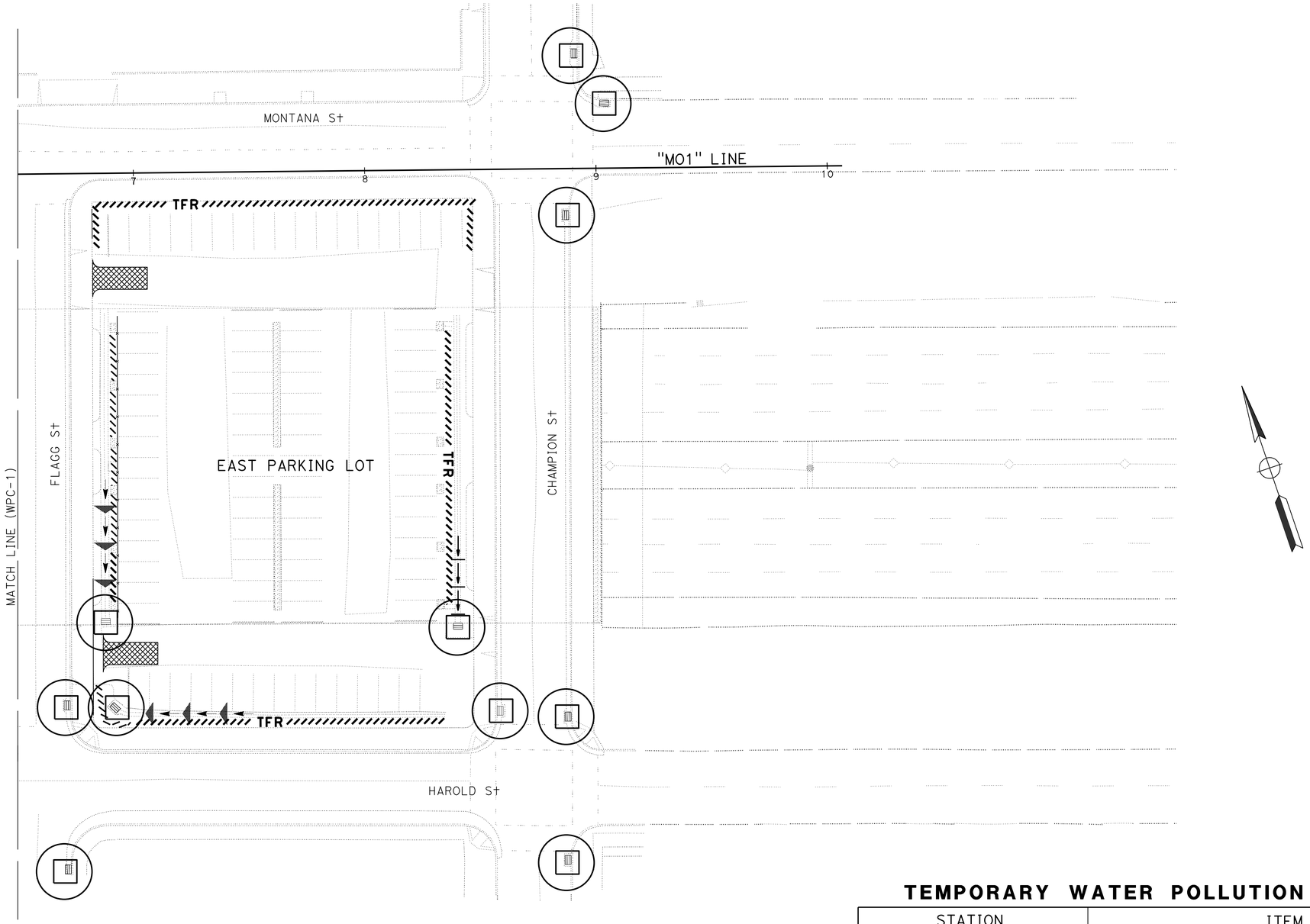

TEMPORARY WATER POLLUTION CONTROL QUANTITIES

STATION	ITEM	UNIT	QUANTITY
"MO1" 3+00 TO 10+00	TEMPORARY FIBER ROLL	LF	1300
"MO1" 3+00 TO 10+00	TEMPORARY DRAINAGE INLET PROTECTION	EA	21
"MO1" 3+00 TO 10+00	TEMPORARY CHECK DAM	LF	180
"MO1" 3+00 TO 10+00	TEMPORARY CONSTRUCTION ENTRANCE	EA	4

TEMPORARY WATER POLLUTION CONTROL PLAN

NO SCALE

WPC-2

STATE OF CALIFORNIA - DEPARTMENT OF TRANSPORTATION
Caltrans
WATER QUALITY

FUNCTIONAL SUPERVISOR: KAMRAN NAKHJIRI

CALCULATED-DESIGNED BY: JENNIFER CHEN
CHECKED BY: KAMRAN NAKHJIRI

REVISED BY: JC
DATE REVISED: 12-10-15

LAST REVISION 01-21-16
DATE PLOTTED => 09-AUG-2016
TIME PLOTTED => 13:16

Dist	COUNTY	ROUTE	POST MILES TOTAL PROJECT	SHEET No.	TOTAL SHEETS
04	Ala	580	41.5	28	123

Eric Kawakita 4-12-16
REGISTERED CIVIL ENGINEER DATE

6-7-16
PLANS APPROVAL DATE

REGISTERED PROFESSIONAL ENGINEER
Eric S. Kawakita
No. 78480
Exp. 9-30-17
CIVIL
STATE OF CALIFORNIA

THE STATE OF CALIFORNIA OR ITS OFFICERS OR AGENTS SHALL NOT BE RESPONSIBLE FOR THE ACCURACY OR COMPLETENESS OF SCANNED COPIES OF THIS PLAN SHEET.

NOTE:

FOR ACCURATE RIGHT OF WAY DATA, CONTACT RIGHT OF WAY ENGINEERING AT THE DISTRICT OFFICE.

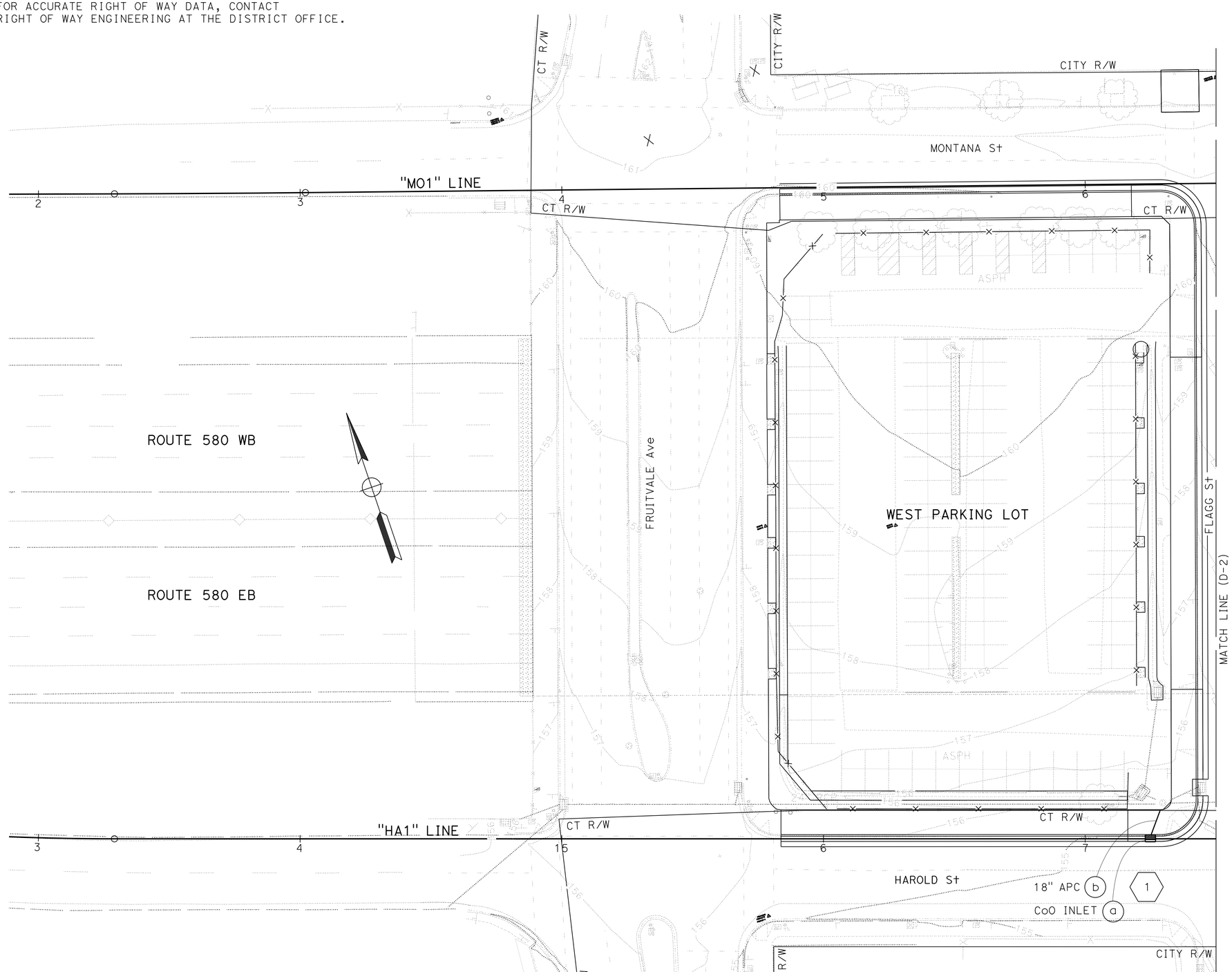

ABBREVIATIONS:

CoO	CITY OF OAKLAND
CT	CALTRANS

APPROVED FOR DRAINAGE WORK ONLY

DRAINAGE PLAN

SCALE: 1" = 50'

D-1

CALCULATED-DESIGNED BY	ERIC KAWAKITA
CHECKED BY	JAMES CHUANG
FUNCTIONAL SUPERVISOR	CRAIG TOMIMATSU
REVISED BY	JC
DATE REVISED	4-12-16

STATE OF CALIFORNIA - DEPARTMENT OF TRANSPORTATION
Caltrans
HYDRAULICS

LAST REVISION 04-29-16 | DATE PLOTTED => 09-AUG-2016 | TIME PLOTTED => 13:16

Dist	COUNTY	ROUTE	POST MILES TOTAL PROJECT	SHEET No.	TOTAL SHEETS
04	Ala	580	41.5	29	123

Eric Kawakita 4-12-16
REGISTERED CIVIL ENGINEER DATE

6-7-16
PLANS APPROVAL DATE

REGISTERED PROFESSIONAL ENGINEER
Eric S. Kawakita
No. 78480
Exp. 9-30-17
CIVIL
STATE OF CALIFORNIA

THE STATE OF CALIFORNIA OR ITS OFFICERS OR AGENTS SHALL NOT BE RESPONSIBLE FOR THE ACCURACY OR COMPLETENESS OF SCANNED COPIES OF THIS PLAN SHEET.

NOTE:

FOR ACCURATE RIGHT OF WAY DATA, CONTACT RIGHT OF WAY ENGINEERING AT THE DISTRICT OFFICE.

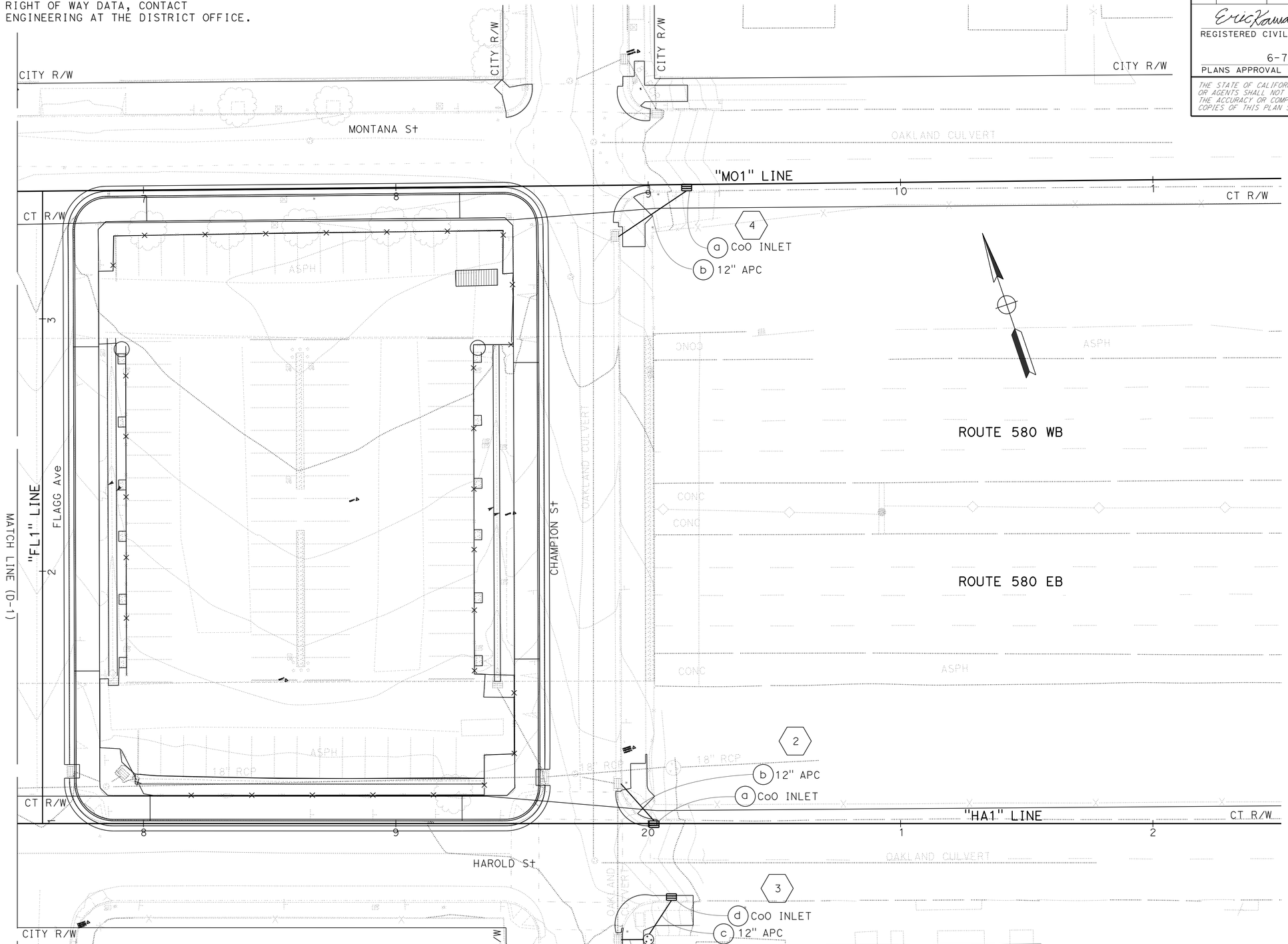

FOR NOTES, ABBREVIATIONS AND LEGEND, SEE SHEET D-1

APPROVED FOR DRAINAGE WORK ONLY

DRAINAGE PLAN

SCALE: 1" = 50'

D-2

REVISED BY	JC
DATE REVISED	4-12-16
CALCULATED-DESIGNED BY	ERIC KAWAKITA
CHECKED BY	JAMES CHUANG
FUNCTIONAL SUPERVISOR	CRAIG TOMIMATSU

STATE OF CALIFORNIA - DEPARTMENT OF TRANSPORTATION
Caltrans
HYDRAULICS

LAST REVISION 04-29-16 | DATE PLOTTED => 09-AUG-2016 | TIME PLOTTED => 13:16

Dist	COUNTY	ROUTE	POST MILES TOTAL PROJECT	SHEET No.	TOTAL SHEETS
04	Ala	580	41.5	30	123

REGISTERED CIVIL ENGINEER — DATE: 4-12-16

6-7-16
PLANS APPROVAL DATE

REGISTERED PROFESSIONAL ENGINEER — Eric S. Kawakita No. 78480 Exp. 9-30-17 CIVIL — STATE OF CALIFORNIA

THE STATE OF CALIFORNIA OR ITS OFFICERS OR AGENTS SHALL NOT BE RESPONSIBLE FOR THE ACCURACY OR COMPLETENESS OF SCANNED COPIES OF THIS PLAN SHEET.

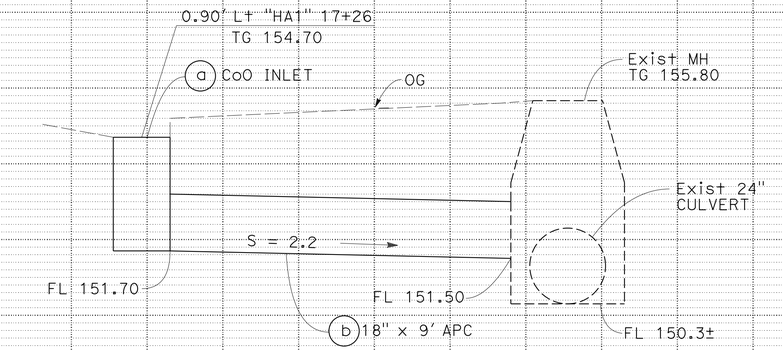

DRAINAGE SYSTEM No. 1

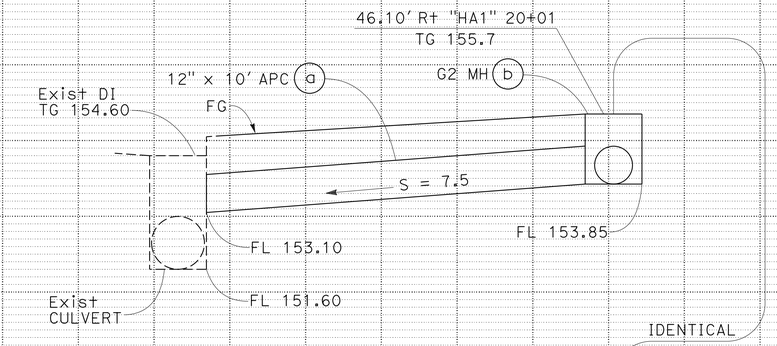

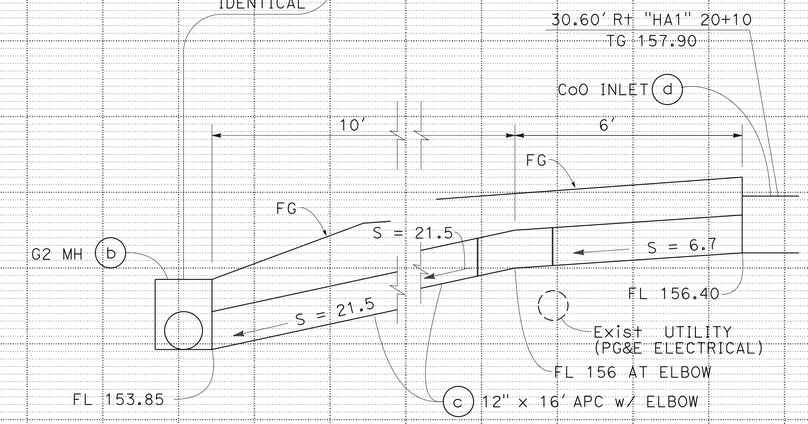

DRAINAGE SYSTEM No. 3

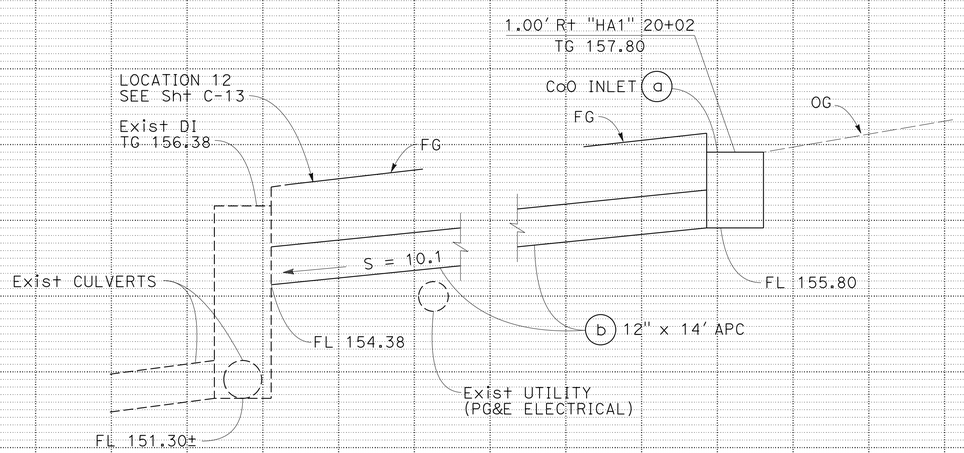

DRAINAGE SYSTEM No. 2

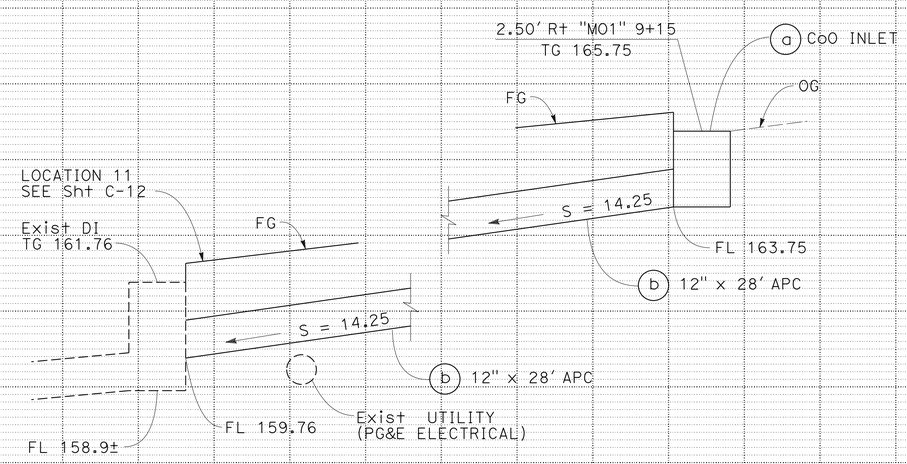

DRAINAGE SYSTEM No. 4

ABBREVIATIONS:

PG&E	PACIFIC GAS AND ELECTRIC
w/	WITH

DRAINAGE PROFILES

SCALE: Horiz 1" = 2'
Vert 1" = 2'

DP-1

STATE OF CALIFORNIA - DEPARTMENT OF TRANSPORTATION
Caltrans
HYDRAULICS

FUNCTIONAL SUPERVISOR: CRAIG TOMIMATSU
CALCULATED-DESIGNED BY: ERIC KAWAKITA
CHECKED BY: JAMES CHUANG
REVISED BY: JC
DATE REVISED: 4-12-16

LAST REVISION 05-24-16
DATE PLOTTED => 09-AUG-2016
TIME PLOTTED => 13:16

Dist	COUNTY	ROUTE	POST MILES TOTAL PROJECT	SHEET No.	TOTAL SHEETS
04	Ala	580	41.5	31	123

Eric Kawakita 4-12-16
REGISTERED CIVIL ENGINEER DATE

6-7-16
PLANS APPROVAL DATE

REGISTERED PROFESSIONAL ENGINEER Eric S. Kawakita No. 78480 Exp. 9-30-17 CIVIL STATE OF CALIFORNIA

THE STATE OF CALIFORNIA OR ITS OFFICERS OR AGENTS SHALL NOT BE RESPONSIBLE FOR THE ACCURACY OR COMPLETENESS OF SCANNED COPIES OF THIS PLAN SHEET.

NOTES:

1. TACK COAT (ASPHALTIC EMULSION) SHALL BE APPLIED PRIOR TO PLACING HMA(A).
2. FOR INFORMATION NOT SHOWN, SEE RSP B7-11, D72B AND RSP D72C.
3. ORIENTATION OF TYPE G1 INLETS SIMILAR.

ABBREVIATIONS:

CD	CLEAR DISTANCE
CLSM	CONTROLLED LOW-STRENGTH MATERIAL
HMA(A)	HOT MIX ASPHALT (TYPE A)
OD	OUTSIDE DIAMETER OF UTILITY OR CULVERT

LEGEND:

- CONCRETE
- HOT MIX ASPHALT (TYPE A)
- LEAN CONCRETE BACKFILL

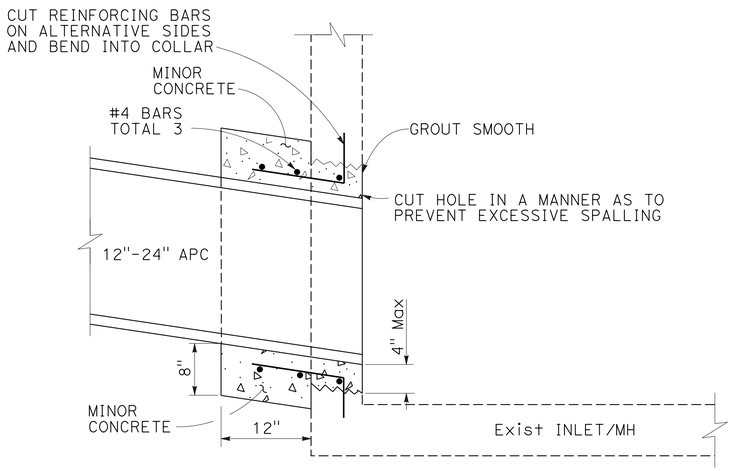

PIPE CONNECTION TO EXISTING INLET/MANHOLE

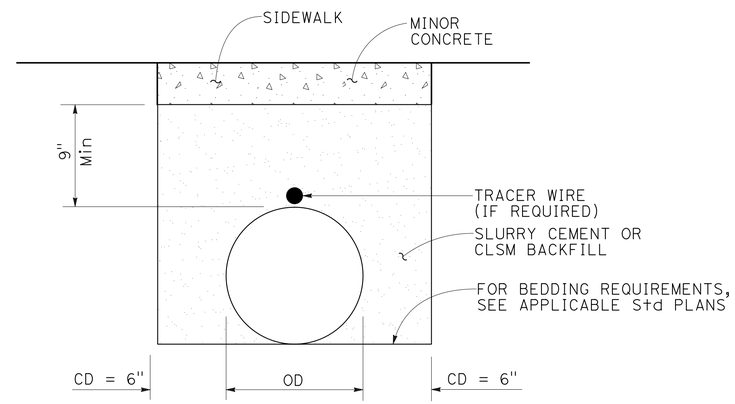

TRENCH PAVING WITH MORE THAN 2' COVER

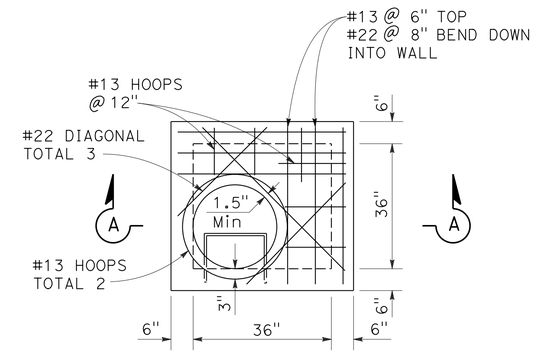

PLAN

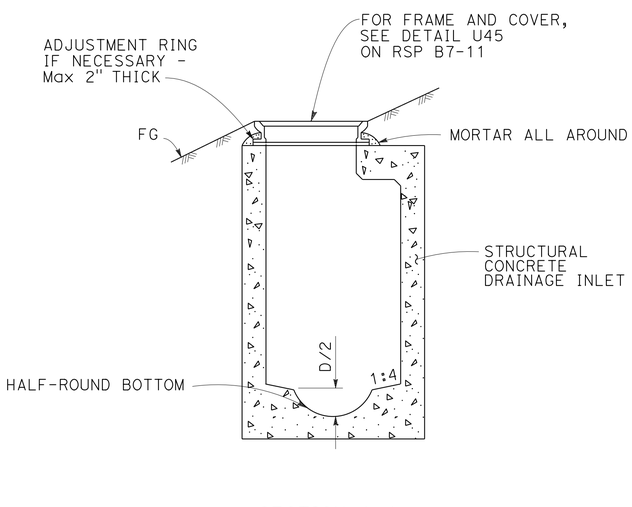

SECTION A-A

G2 MANHOLE

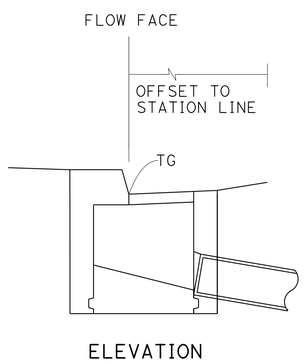

ELEVATION

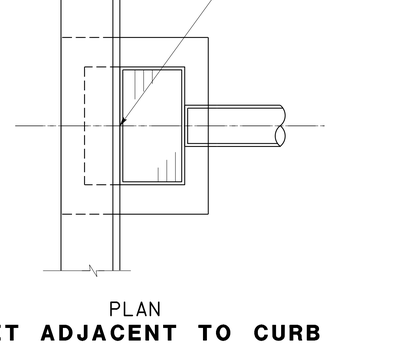

PLAN

INLET ADJACENT TO CURB

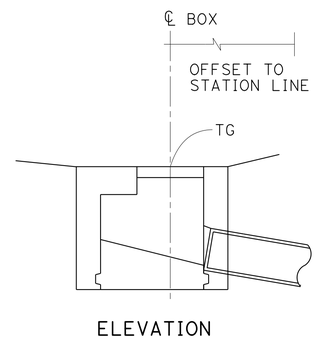

ELEVATION

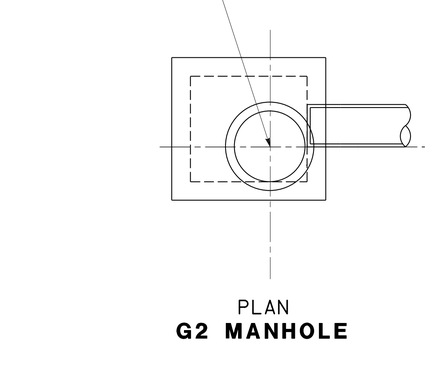

PLAN

G2 MANHOLE

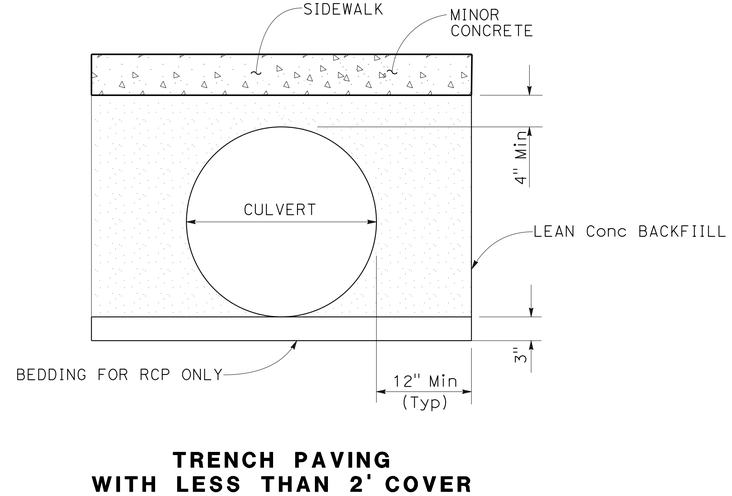

TRENCH PAVING WITH LESS THAN 2' COVER

NOTE:

FOR INFORMATION NOT SHOWN, SEE RSP D72B AND D72C - G2 INLET.

DRAINAGE DETAILS

NO SCALE

DD-1

STATE OF CALIFORNIA - DEPARTMENT OF TRANSPORTATION
Caltrans® HYDRAULICS

REVISED BY	DATE REVISED
JC	4-12-16

ERIC KAWAKITA — JAMES CHUANG
CALCULATED-DESIGNED BY — CHECKED BY
FUNCTIONAL SUPERVISOR — CRAIG TOMIMATSU

LAST REVISION 05-24-16 — DATE PLOTTED => 09-AUG-2016 — TIME PLOTTED => 13:16

Dist	COUNTY	ROUTE	POST MILES TOTAL PROJECT	SHEET No.	TOTAL SHEETS
04	Ala	580	41.5	32	123

Eric Kawakita 4-12-16
REGISTERED CIVIL ENGINEER DATE

6-7-16
PLANS APPROVAL DATE

REGISTERED PROFESSIONAL ENGINEER Eric S. Kawakita No. 78480 Exp. 9-30-17 CIVIL STATE OF CALIFORNIA

THE STATE OF CALIFORNIA OR ITS OFFICERS OR AGENTS SHALL NOT BE RESPONSIBLE FOR THE ACCURACY OR COMPLETENESS OF SCANNED COPIES OF THIS PLAN SHEET.

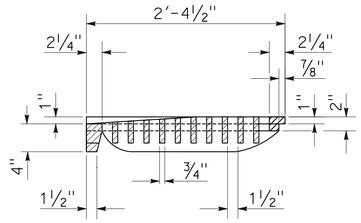

SECTION D-D

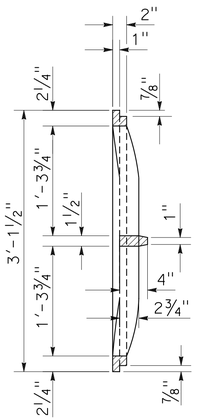

SECTION E-E

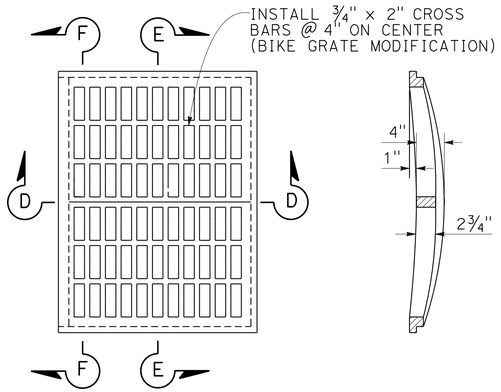

SECTION F-F

GRATING

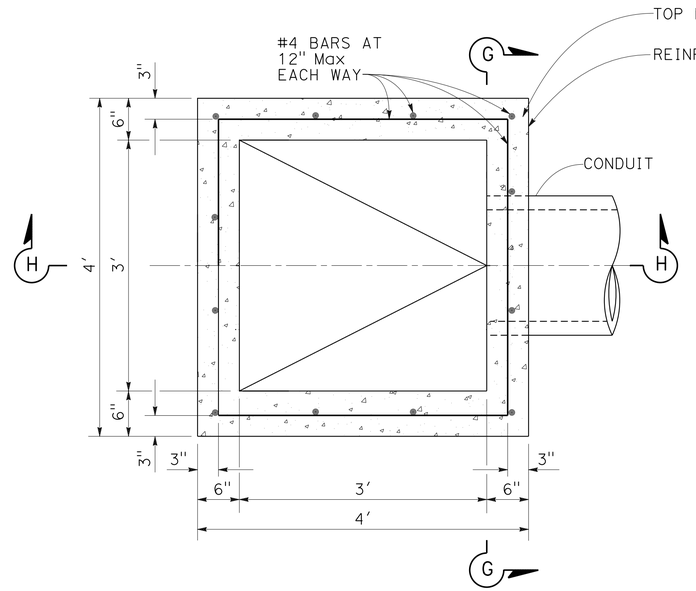

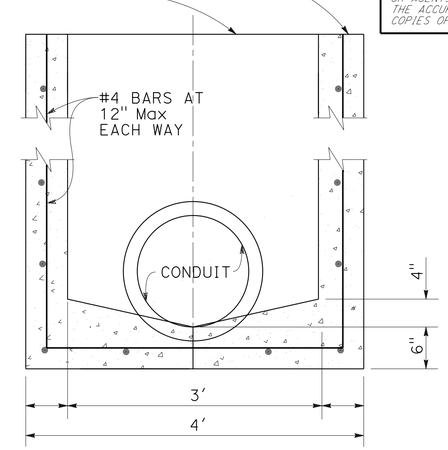

SECTION G-G
(SYMMETRICAL ABOUT CENTERLINE)

GENERAL NOTES:

1. GRATE AND FRAME SHALL BE ASSEMBLED AND MADE TO FIT BEFORE DELIVERY.
2. THE GRATE SHALL BE HOT-DIP GALVANIZED IN ACCORDANCE WITH ASTM A-123.
3. ALL BEARING BARS AND CROSS BARS OF GRATE SHALL BE RESISTANCE WELDED OR ELECTROFORGED INTO A ONE PIECE CONSTRUCTION.
4. ALL METAL SHALL BE STRUCTURAL GRADE STEEL IN ACCORDANCE WITH ASTM A-36.
5. A VEE CHANNEL 4" DEEP SHALL JOIN TWO OR MORE CONDUITS ENTERING AN INLET.
6. CONSTRUCT STEPS IN INLETS WITH A DEPTH OF 4' OR GREATER

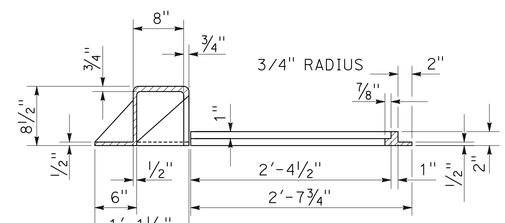

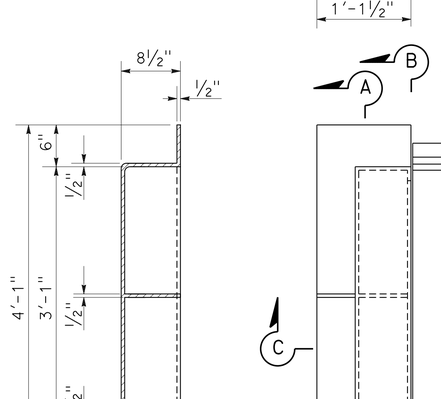

SECTION A-A

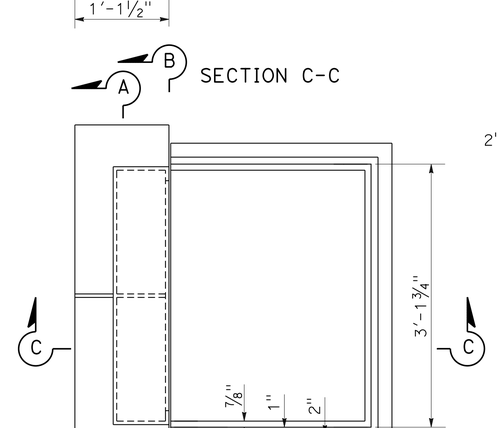

SECTION C-C

FRAME
CITY OF OAKLAND (CoO) INLET

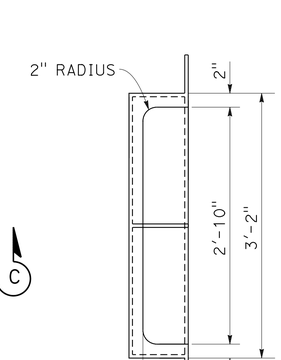

SECTION B-B

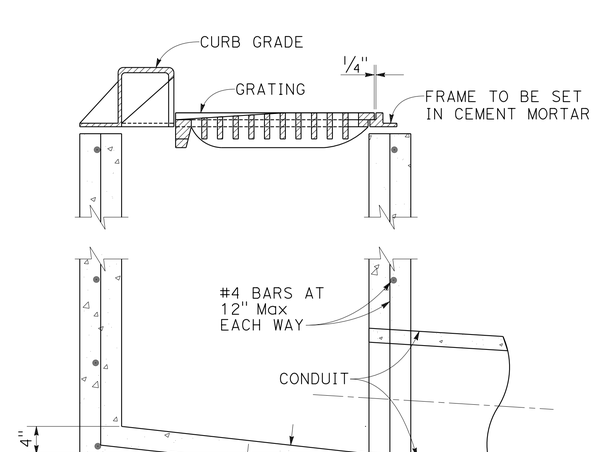

SECTION H-H

DRAINAGE DETAILS
NO SCALE

DD-2

STATE OF CALIFORNIA - DEPARTMENT OF TRANSPORTATION
Caltrans
HYDRAULICS
FUNCTIONAL SUPERVISOR: CRAIG TOMIMATSU
CALCULATED-DESIGNED BY: ERIC KAWAKITA
CHECKED BY: JAMES CHUANG
REVISED BY: JC
DATE REVISED: 4-12-16

LAST REVISION 05-24-16 | DATE PLOTTED => 09-AUG-2016 | TIME PLOTTED => 13:16

Dist	COUNTY	ROUTE	POST MILES TOTAL PROJECT	SHEET No.	TOTAL SHEETS
04	Ala	580	41.5	33	123

Eric Kawakita 4-12-16
REGISTERED CIVIL ENGINEER DATE

6-7-16
PLANS APPROVAL DATE

REGISTERED PROFESSIONAL ENGINEER
Eric S. Kawakita
No. 78480
Exp. 9-30-17
CIVIL
STATE OF CALIFORNIA

THE STATE OF CALIFORNIA OR ITS OFFICERS OR AGENTS SHALL NOT BE RESPONSIBLE FOR THE ACCURACY OR COMPLETENESS OF SCANNED COPIES OF THIS PLAN SHEET.

NOTE:

1. ALLOWABLE APC PIPE MATERIALS ARE RCP AND PLASTIC PIPE (SMOOTH INTERIOR WALLS TYPE ONLY).

DRAINAGE QUANTITIES

DRAINAGE SHEET No.	DRAINAGE SYSTEM No.	DRAINAGE UNIT	STRUCTURAL CONCRETE, DRAINAGE INLET	MISCELLANEOUS IRON AND STEEL	FRAME AND COVER (N)	HEIGHT OF DI (N)	12" APC	18" APC	MAXIMUM COVER (N)	LEAN CONCRETE BACKFILL	CULVERT SLURRY-CEMENT BACKFILL	DESCRIPTION	STATION	DRAINAGE SHEET No.	DRAINAGE SYSTEM No.	DRAINAGE UNIT
			CY	LB	EA	ft	LF			CY						
D-1	1	a	1.24	188	1	3						CITY OF OAKLAND INLET	0.90' Lt "HA1" 17+26	D-1	1	a
↓	↓	b						9	2.6		2.53	18" APC		↓	↓	b
D-2	2	a	1	188	1	2						CITY OF OAKLAND INLET	1.00' Rt "HA1" 20+02	D-2	2	a
↓	↓	b					14		1.1	2.49		12" APC		↓	↓	b
D-2	3	a					10		1	2.35		12" APC		D-2	3	a
		b	1.02	235	1	1.9						G2 MH	46.10' Rt "HA1" 20+01			b
		c					16		1.3	2.78		12" APC				c
↓	↓	d	0.87	188	1	1.5						CITY OF OAKLAND INLET	30.60' Rt "HA1" 20+10	↓	↓	d
D-2	4	a	1	188	1	2						CITY OF OAKLAND INLET	2.50' Rt "MO1" 9+15	D-2	4	a
↓	↓	b					28		1.1	4.98		12" APC		↓	↓	b
TOTAL			5.13	987			68	9		12.60	2.53					

(N) NOT A SEPARATE PAY ITEM, FOR INFORMATION ONLY

CALCULATED-DESIGNED BY: ERIC KAWAKITA
CHECKED BY: JAMES CHUANG
REVISED BY: JC
DATE REVISED: 4-12-16
FUNCTIONAL SUPERVISOR: CRAIG TOMIMATSU

STATE OF CALIFORNIA - DEPARTMENT OF TRANSPORTATION
Caltrans
HYDRAULICS

DRAINAGE QUANTITIES

DQ-1

LAST REVISION 05-24-16
DATE PLOTTED => 09-AUG-2016
TIME PLOTTED => 13:16

Dist	COUNTY	ROUTE	POST MILES TOTAL PROJECT	SHEET No.	TOTAL SHEETS
04	Ala	580	41.5	34	123

REGISTERED CIVIL ENGINEER DATE 5-30-16

PLANS APPROVAL DATE 6-7-16

REGISTERED PROFESSIONAL ENGINEER James Chuang No. 74690 Exp. 12-31-17 CIVIL STATE OF CALIFORNIA

THE STATE OF CALIFORNIA OR ITS OFFICERS OR AGENTS SHALL NOT BE RESPONSIBLE FOR THE ACCURACY OR COMPLETENESS OF SCANNED COPIES OF THIS PLAN SHEET.

NOTE:

FOR ACCURATE RIGHT OF WAY DATA, CONTACT RIGHT OF WAY ENGINEERING AT THE DISTRICT OFFICE.

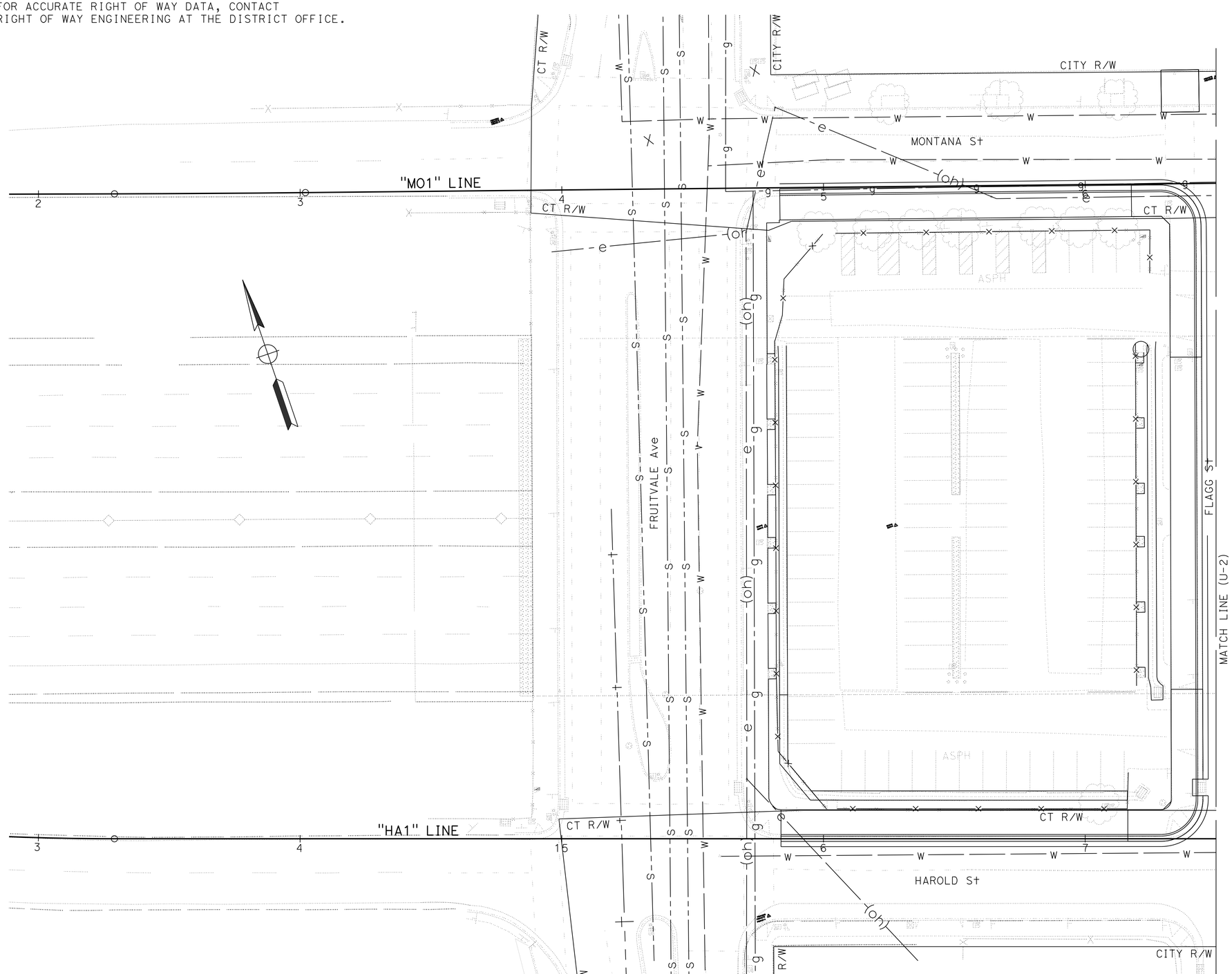

NOTE:

1. UTILITY OWNERSHIP:

   ELECTRICAL OVERHEAD AND UNDERGROUND - PACIFIC GAS AND ELECTRIC (PG&E)
   GAS - PACIFIC GAS AND ELECTRIC (PG&E)
   WATER - EAST BAY MUNICIPAL UTILITY DISTRICT (EBMUD)
   SEWER - CITY OF OAKLAND

LEGEND:

ELECTRICAL OVERHEAD	—— - e —— —— -(oh)-
ELECTRICAL UNDERGROUND	—— - e —— —— - e —
GAS	—— - g —— - —— - g —
WATER	- —— w —— —— —— w —
SEWER	—— - - s —— - - —— - - s -

ABBREVIATION:

CT CALTRANS

THIS PLAN TO BE USED FOR UTILITY INFORMATION ONLY

UTILITY PLAN

SCALE: 1" = 20'

U-1

STATE OF CALIFORNIA - DEPARTMENT OF TRANSPORTATION

Caltrans®

DESIGN

FUNCTIONAL SUPERVISOR: RONALD TSUNG

CALCULATED-DESIGNED BY: JAMES CHUANG

CHECKED BY: VINCE BONNER

REVISED BY: JF

DATE REVISED: 5-30-16

LAST REVISION 04-29-16 | DATE PLOTTED => 09-AUG-2016 | TIME PLOTTED => 13:16

Dist	COUNTY	ROUTE	POST MILES TOTAL PROJECT	SHEET No.	TOTAL SHEETS
04	Ala	580	41.5	35	123

REGISTERED CIVIL ENGINEER DATE 5-30-16

PLANS APPROVAL DATE 6-7-16

REGISTERED PROFESSIONAL ENGINEER James Chuang No. 74690 Exp. 12-31-17 CIVIL STATE OF CALIFORNIA

THE STATE OF CALIFORNIA OR ITS OFFICERS OR AGENTS SHALL NOT BE RESPONSIBLE FOR THE ACCURACY OR COMPLETENESS OF SCANNED COPIES OF THIS PLAN SHEET.

NOTE:

FOR ACCURATE RIGHT OF WAY DATA, CONTACT RIGHT OF WAY ENGINEERING AT THE DISTRICT OFFICE.

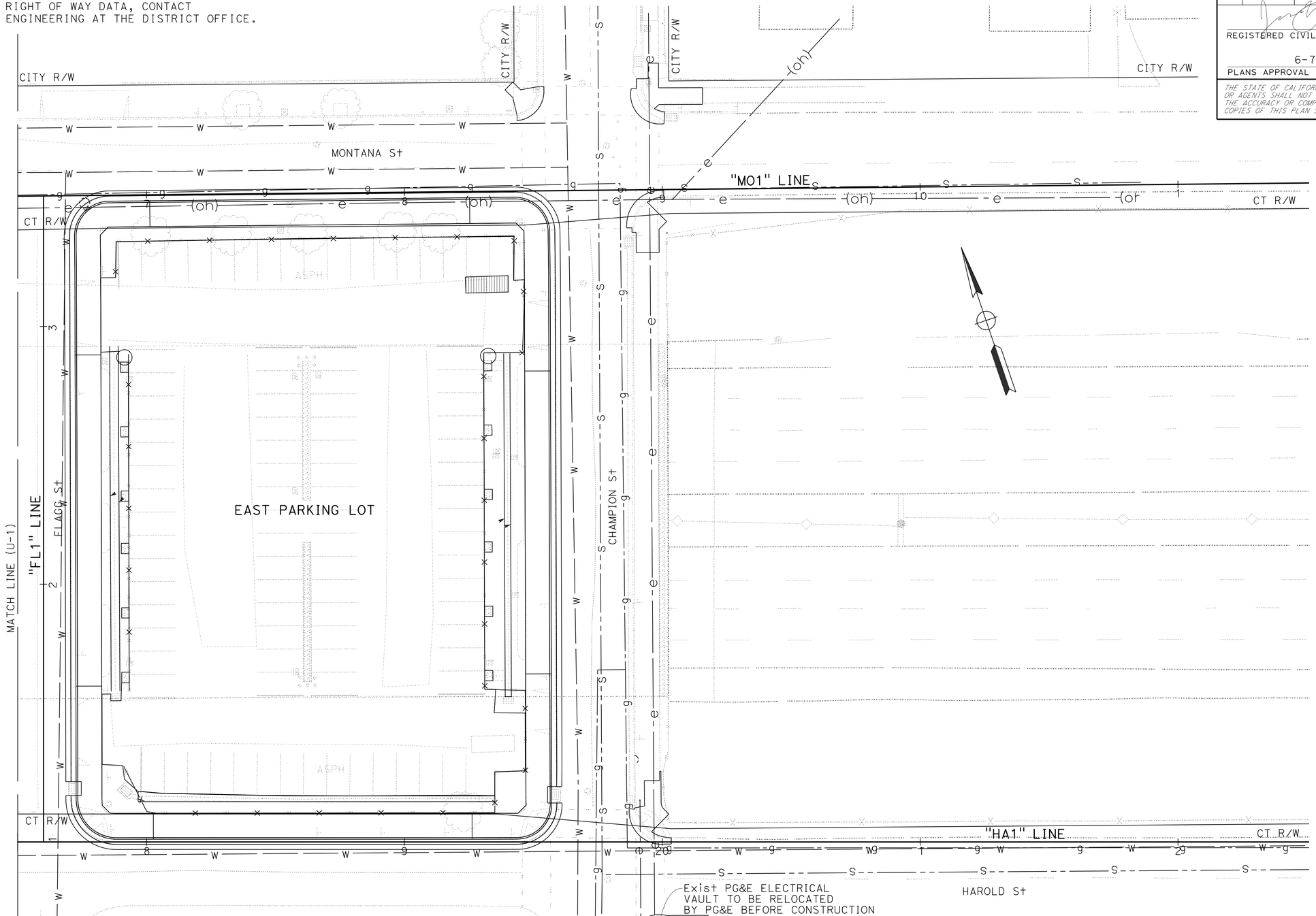

THIS PLAN TO BE USED FOR UTILITY INFORMATION ONLY

FOR NOTES, ABBREVIATIONS AND LEGEND, SEE SHEET U-1

UTILITY PLAN

SCALE: 1" = 20'

U-2

CALCULATED-DESIGNED BY	JAMES CHUANG	REVISED BY	JF
CHECKED BY	VINCE BONNER	DATE REVISED	5-30-16

FUNCTIONAL SUPERVISOR: RONALD TSUNG

STATE OF CALIFORNIA - DEPARTMENT OF TRANSPORTATION

Caltrans DESIGN

LAST REVISION 05-24-16 | DATE PLOTTED => 09-AUG-2016 | TIME PLOTTED => 13:17

Dist	COUNTY	ROUTE	POST MILES TOTAL PROJECT	SHEET No.	TOTAL SHEETS
04	Ala	580	41.5	36	123

REGISTERED CIVIL ENGINEER 5-26-16 DATE

6-7-16
PLANS APPROVAL DATE

REGISTERED PROFESSIONAL ENGINEER Rachel Liu No. 74807 Exp. 12-31-17 CIVIL STATE OF CALIFORNIA

THE STATE OF CALIFORNIA OR ITS OFFICERS OR AGENTS SHALL NOT BE RESPONSIBLE FOR THE ACCURACY OR COMPLETENESS OF SCANNED COPIES OF THIS PLAN SHEET.

NOTES:

1. EXACT LOCATION AND POSITION OF ROADSIDE SIGNS AND CONSTRUCTION AREA SIGNS TO BE DETERMINED BY THE ENGINEER.
2. POST SIZE AND LENGTH GIVEN ARE APPROXIMATE. EXACT SIZE AND LENGTH TO BE DETERMINED BY THE ENGINEER.
3. SIGNS "PARKING LOT CLOSED" NEED TO BE INSTALLED 2 WEEKS BEFORE THE CLOSURE.

LEGEND:

CONSTRUCTION AREA SIGN LETTER

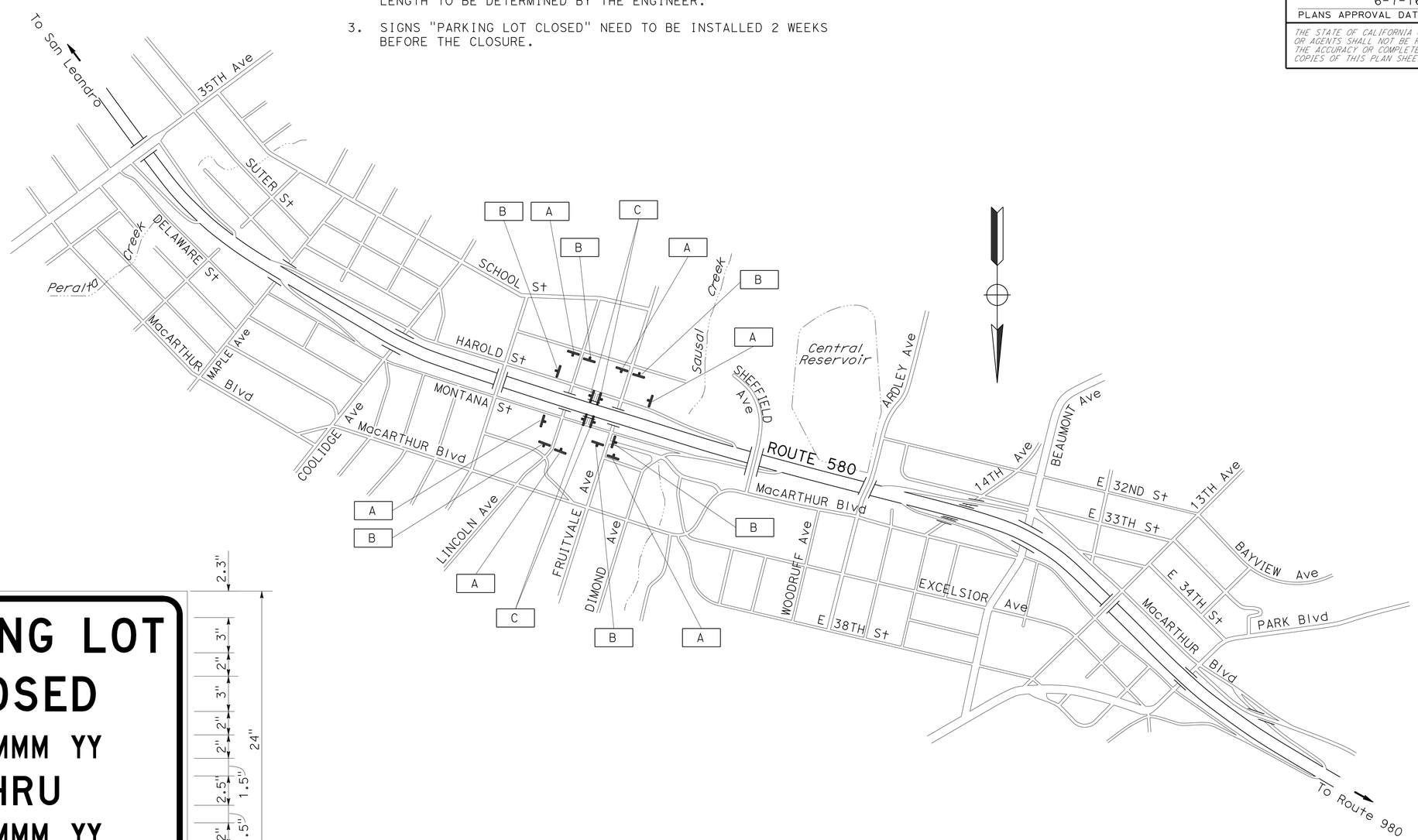

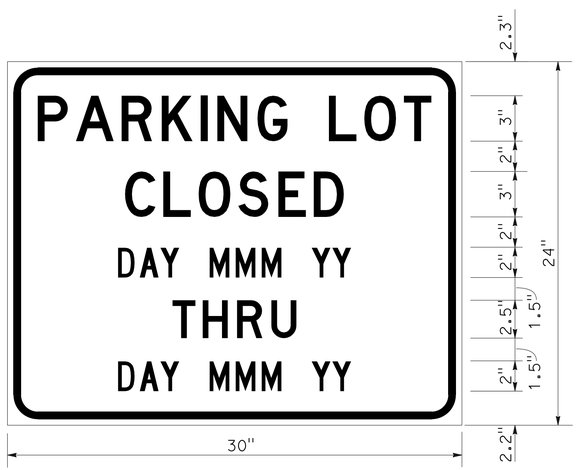

BLACK ON ORANGE
[PARKING LOT CLOSED] [THRU] 3" D CAPS
[DAY MMM YY] 2" C CAPS

SPEC

STATIONARY MOUNTED CONSTRUCTION AREA SIGNS

SIGN LETTER	SIGN CODE	SIGN MESSAGE	PANEL SIZE (INCHES)	NUMBER OF POST AND SIZE	NUMBER OF SIGNS
A	W20-1	ROAD WORK AHEAD	36" x 36"	(ONE) 4" x 6"	6
B	G20-2	END ROAD WORK	36" x 18"	(ONE) 4" x 4"	6
C	Spec	PARKING LOT CLOSED	30" x 24"	(ONE) 4" x 4"	4

APPROVED FOR CONSTRUCTION AREA SIGN WORK ONLY

CONSTRUCTION AREA SIGNS

NO SCALE

CS-1

CALCULATED-DESIGNED BY	RACHEL LIU
CHECKED BY	CLAUDIA FANG
REVISED BY	JC
DATE REVISED	5-26-16
FUNCTIONAL SUPERVISOR	LOURDES DAVID

STATE OF CALIFORNIA - DEPARTMENT OF TRANSPORTATION
Caltrans
TRAFFIC

LAST REVISION 04-21-16 | DATE PLOTTED => 09-AUG-2016 | TIME PLOTTED => 13:17

Dist	COUNTY	ROUTE	POST MILES TOTAL PROJECT	SHEET No.	TOTAL SHEETS
04	Ala	580	41.5	37	123

REGISTERED CIVIL ENGINEER DATE 5-26-16

PLANS APPROVAL DATE 6-7-16

REGISTERED PROFESSIONAL ENGINEER Jay Kin-Kwok Fong No. 72112 Exp. 6-30-16 CIVIL STATE OF CALIFORNIA

THE STATE OF CALIFORNIA OR ITS OFFICERS OR AGENTS SHALL NOT BE RESPONSIBLE FOR THE ACCURACY OR COMPLETENESS OF SCANNED COPIES OF THIS PLAN SHEET.

NOTE:

FOR ACCURATE RIGHT OF WAY DATA, CONTACT RIGHT OF WAY ENGINEERING AT THE DISTRICT OFFICE.

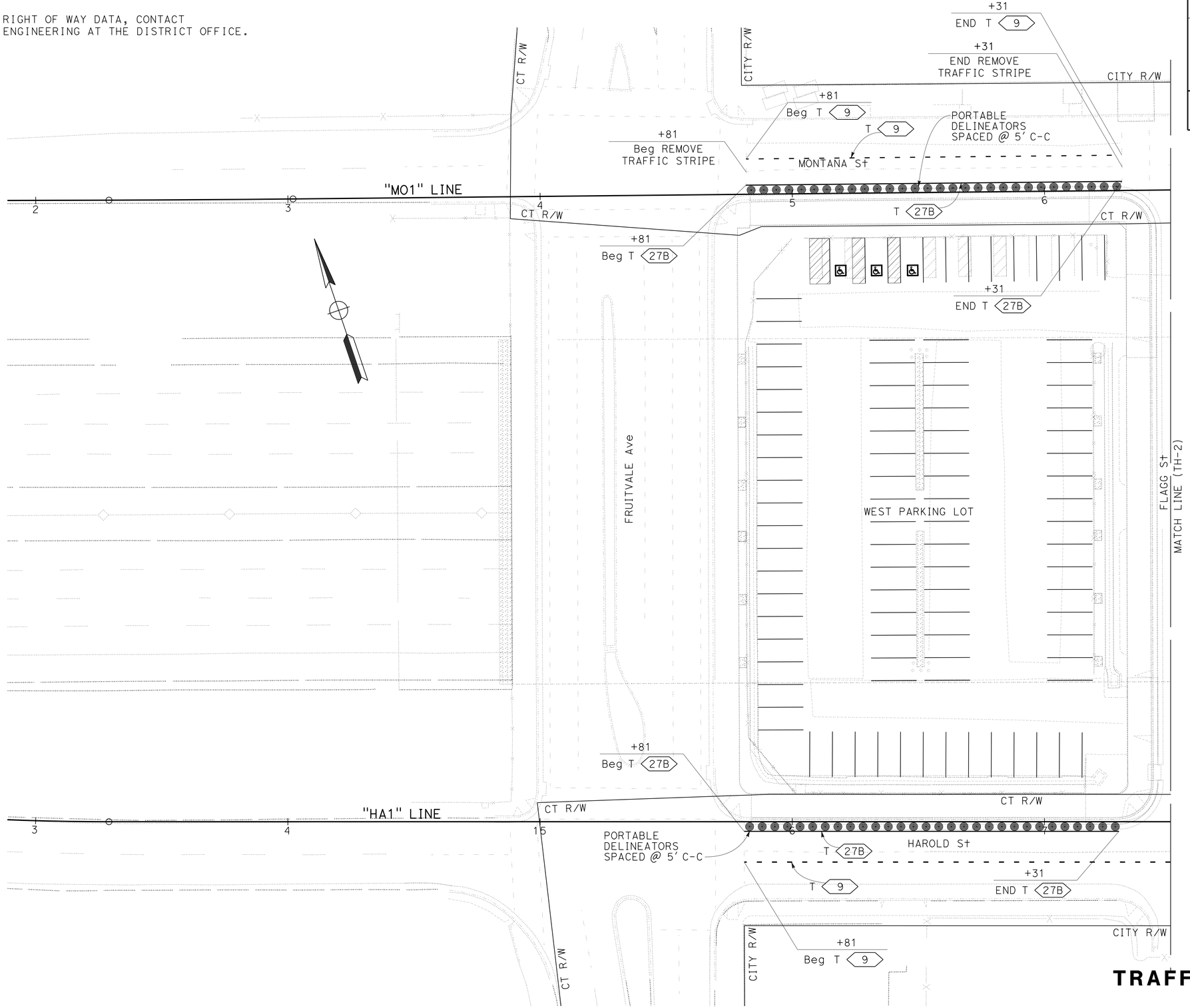

LEGEND:

T No. TEMPORARY TRAFFIC STRIPE

ABBREVIATION:

CT CALTRANS

TRAFFIC HANDLING PLAN

SCALE: 1" = 20'

APPROVED FOR TRAFFIC HANDLING WORK ONLY

TH-1

REVISED BY	DATE REVISED
JC	5-26-16

CALCULATED-DESIGNED BY: JAY FONG
CHECKED BY: VINCE BONNER
FUNCTIONAL SUPERVISOR: RONALD TSUNG

STATE OF CALIFORNIA - DEPARTMENT OF TRANSPORTATION
Caltrans
DESIGN

LAST REVISION 05-24-16 | DATE PLOTTED => 09-AUG-2016 | TIME PLOTTED => 13:17

Dist	COUNTY	ROUTE	POST MILES TOTAL PROJECT	SHEET No.	TOTAL SHEETS
04	Ala	580	41.5	38	123

REGISTERED CIVIL ENGINEER DATE 5-26-16

PLANS APPROVAL DATE 6-7-16

REGISTERED PROFESSIONAL ENGINEER Jay Kin-Kwok Fong No. 72112 Exp. 6-30-16 CIVIL STATE OF CALIFORNIA

THE STATE OF CALIFORNIA OR ITS OFFICERS OR AGENTS SHALL NOT BE RESPONSIBLE FOR THE ACCURACY OR COMPLETENESS OF SCANNED COPIES OF THIS PLAN SHEET.

NOTE:

FOR ACCURATE RIGHT OF WAY DATA, CONTACT RIGHT OF WAY ENGINEERING AT THE DISTRICT OFFICE.

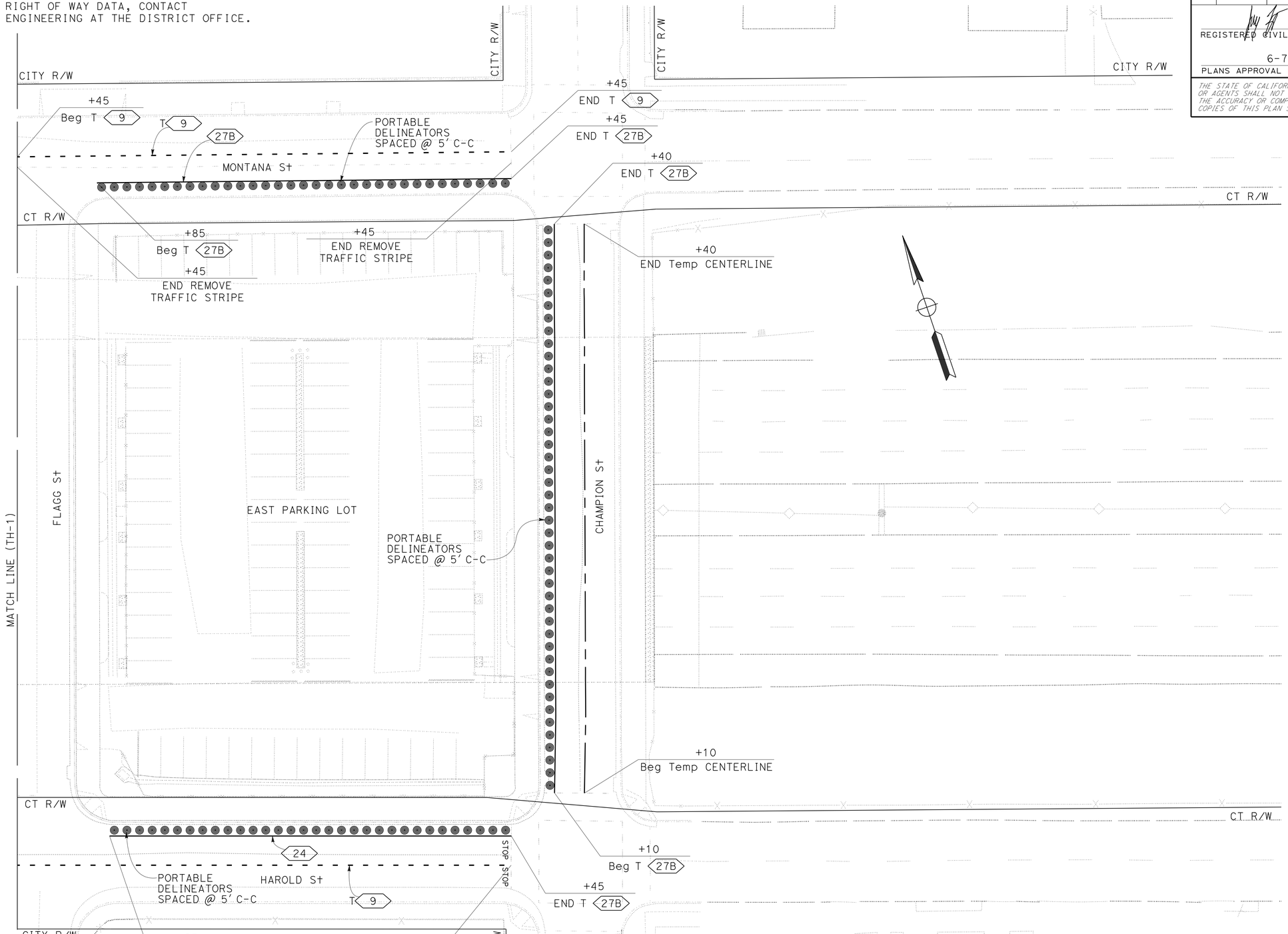

APPROVED FOR TRAFFIC HANDLING WORK ONLY

FOR NOTES, ABBREVIATIONS AND LEGEND, SEE SHEET TH-1

TRAFFIC HANDLING PLAN

SCALE: 1" = 20'

TH-2

JC	5-26-16	JAY FONG	VINCE BONNER
REVISED BY	DATE REVISED	CALCULATED-DESIGNED BY	CHECKED BY

FUNCTIONAL SUPERVISOR: RONALD TSUNG

STATE OF CALIFORNIA - DEPARTMENT OF TRANSPORTATION

Caltrans DESIGN

LAST REVISION 05-25-16 | DATE PLOTTED => 09-AUG-2016 | TIME PLOTTED => 13:17

Dist	COUNTY	ROUTE	POST MILES TOTAL PROJECT	SHEET No.	TOTAL SHEETS
04	Ala	580	41.5	39	123

REGISTERED CIVIL ENGINEER 5-26-16 DATE

6-7-16
PLANS APPROVAL DATE

REGISTERED PROFESSIONAL ENGINEER Jay Kin-Kwok Fong No. 72112 Exp. 6-30-16 CIVIL STATE OF CALIFORNIA

THE STATE OF CALIFORNIA OR ITS OFFICERS OR AGENTS SHALL NOT BE RESPONSIBLE FOR THE ACCURACY OR COMPLETENESS OF SCANNED COPIES OF THIS PLAN SHEET.

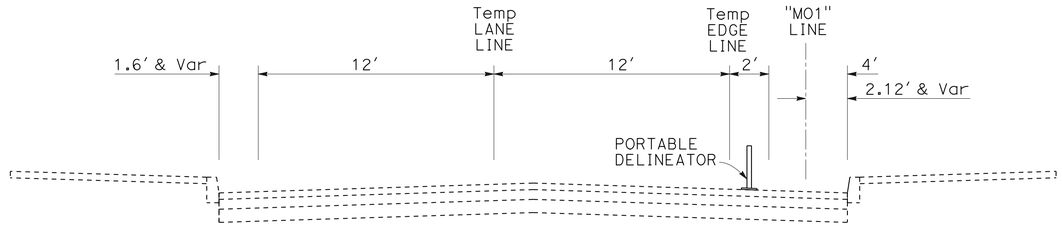

MONTANA St

"MO1" 4+80 TO 8+50

ABBREVIATION:

& AND

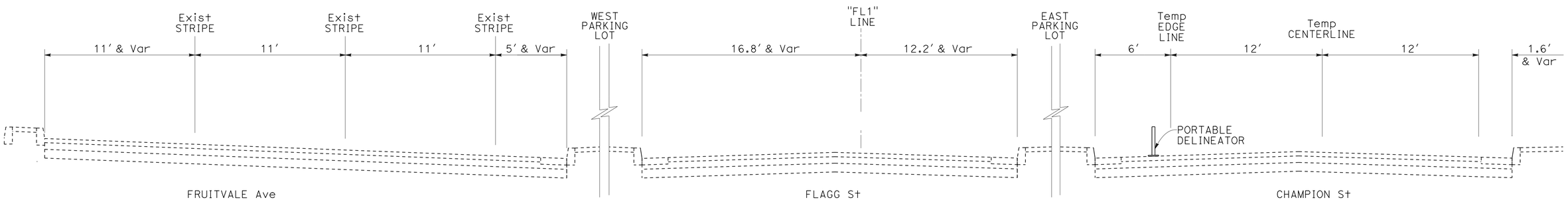

FRUITVALE Ave FLAGG St CHAMPION St

"FL1" 1+10 TO 3+40

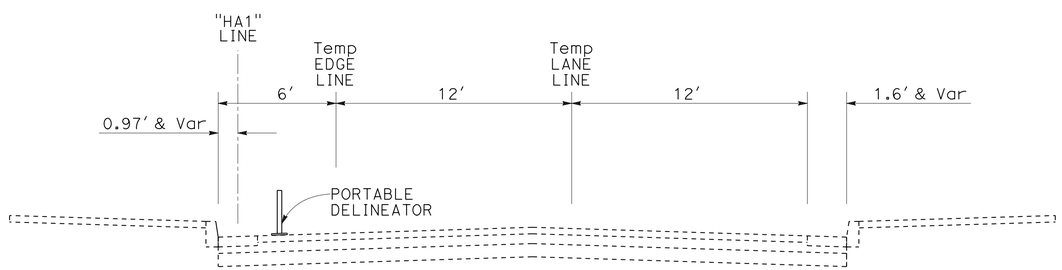

HAROLD St

"HA1" 15+80 TO 19+50

TRAFFIC HANDLING DETAILS

NO SCALE

THD-1

STATE OF CALIFORNIA - DEPARTMENT OF TRANSPORTATION
Caltrans® DESIGN

FUNCTIONAL SUPERVISOR: RONALD TSUNG
CALCULATED-DESIGNED BY: JAY FONG
CHECKED BY: VINCE BONNER
REVISED BY: JC
DATE REVISED: 5-26-16

LAST REVISION 02-04-16 | DATE PLOTTED => 09-AUG-2016 | TIME PLOTTED => 13:17

Dist	COUNTY	ROUTE	POST MILES TOTAL PROJECT	SHEET No.	TOTAL SHEETS
04	Ala	580	41.5	40	123

REGISTERED CIVIL ENGINEER 5-26-16 DATE

6-7-16
PLANS APPROVAL DATE

REGISTERED PROFESSIONAL ENGINEER Jay Kin-Kwok Fong No. 72112 Exp. 6-30-16 CIVIL STATE OF CALIFORNIA

THE STATE OF CALIFORNIA OR ITS OFFICERS OR AGENTS SHALL NOT BE RESPONSIBLE FOR THE ACCURACY OR COMPLETENESS OF SCANNED COPIES OF THIS PLAN SHEET.

TEMPORARY PAVEMENT DELINEATION QUANTITIES

SHEET No.	STATION	STREET	DETAIL No. OR PAVEMENT MARKING	PAINT TRAFFIC STRIPE (1-COAT)		REMOVE PAINTED TRAFFIC STRIPE	TEMPORARY PAVEMENT MARKING (PAINT)	REMOVE PAINTED TRAFFIC MARKING	PAVEMENT MARKER (RETROREFLECTIVE)	REMOVE PAVEMENT MARKER	TEMPORARY PAVEMENT MARKER
				4" BROKEN WHITE	4" YELLOW				TYPE G		
				LF			SQFT		EA		
TH-1	"MO1" 4+81 TO 6+31	MONTANA St	9	44		44			5	5	
	"MO1" 4+81 TO 6+31	MONTANA St	27B		150	150					
	"HA1" 15+81 TO 17+31	HAROLD St	27B		150	150					
TH-1, TH-2	"HA1" 15+80 TO 19+45	HAROLD St	TRAFFIC STRIPE								17
TH-2	"HA1" 17+85 TO 19+45	HAROLD St	27B		160	160					
			STOP				44	44			
	"FL1" 1+10 TO 3+40	CHAMPION St	27B		230	230					
	"FL1" 1+10 TO 3+40	CHAMPION St	CENTERLINE								11
	"MO1" 6+85 TO 8+45	MONTANA St	27B		160	160					
	"MO1" 6+85 TO 8+45	MONTANA St	9	59		59			6	6	
SUBTOTAL				103	850	953			11	11	28
TOTAL				953		953	44	44	11	11	28

TEMPORARY TRAFFIC HANDLING QUANTITIES

SHEET No.	STATION	STREET	PORTABLE DELINEATORS
			EA
TH-1	"MO1" 4+81 TO 6+31	MONTANA St	30
	"HA1" 15+81 TO 17+31	HAROLD St	30
TH-1, TH-2	"FL1" 1+10 TO 3+40	MONTANA St	46
TH-2	"MO1" 6+85 TO 8+45	HAROLD St	32
	"HA1" 17+85 TO 19+45	CHAMPION St	32
TOTAL			170

TRAFFIC HANDLING QUANTITIES

THQ-1

REVISED BY	DATE REVISED
JC	5-26-16

JAY FONG — VINCE BONNER — CALCULATED-DESIGNED BY — CHECKED BY

FUNCTIONAL SUPERVISOR: RONALD TSUNG

STATE OF CALIFORNIA - DEPARTMENT OF TRANSPORTATION — Caltrans — DESIGN

LAST REVISION 05-25-16 | DATE PLOTTED => 09-AUG-2016 | TIME PLOTTED => 13:17

Dist	COUNTY	ROUTE	POST MILES TOTAL PROJECT	SHEET No.	TOTAL SHEETS
04	Ala	580	41.5	41	123

REGISTERED CIVIL ENGINEER 5-26-16 DATE

6-7-16
PLANS APPROVAL DATE

REGISTERED PROFESSIONAL ENGINEER Shi F. Lam No. 50970 Exp. 9-30-17 CIVIL STATE OF CALIFORNIA

THE STATE OF CALIFORNIA OR ITS OFFICERS OR AGENTS SHALL NOT BE RESPONSIBLE FOR THE ACCURACY OR COMPLETENESS OF SCANNED COPIES OF THIS PLAN SHEET.

NOTE:

FOR ACCURATE RIGHT OF WAY DATA, CONTACT RIGHT OF WAY ENGINEERING AT THE DISTRICT OFFICE.

NOTES:

1. USE 4" WHITE LINE FOR ALL PARKING STALL STRIPING EXCEPT AS SHOWN ON RSP A90A.
2. FOR CORNER NO PARKING AREA, USE 4" WHITE LINE DIAGONALS AT 3' Max CENTERS AT SAME INTERVALS.

ABBREVIATIONS:

ADA AMERICAN DISABILITIES ACT
CT CALTRANS

LEGEND:

TYPE I (10') ARROW

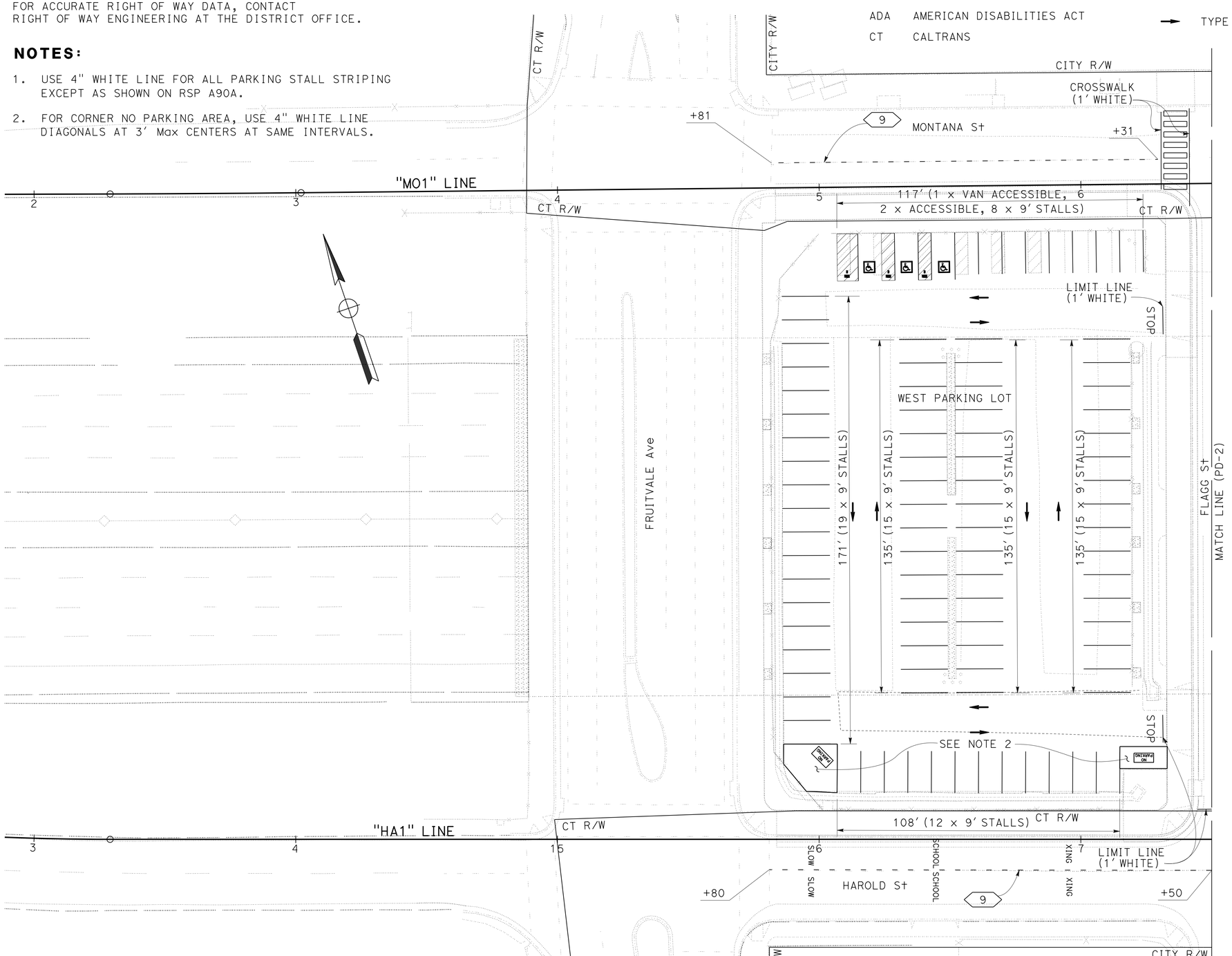

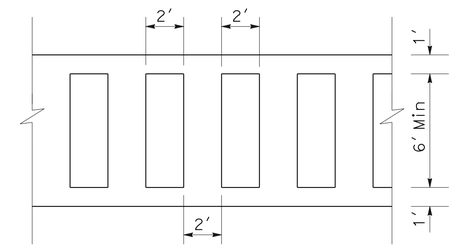

LADDER
HIGHER VISIBILITY CROSSWALKS
NO SCALE

NOTE:
FOR CROSSWALK PAVEMENT MARKING DETAILS NOT SHOWN, SEE RSP A24F AND A88A.

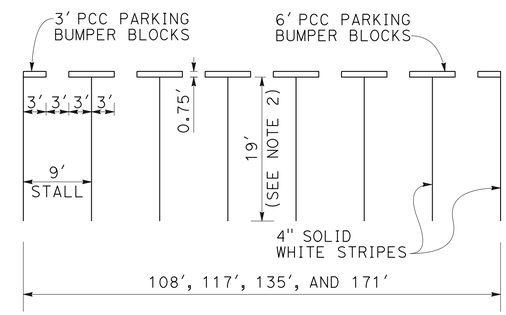

PCC BUMPER BLOCK AND PARKING STALL LAYOUT DETAILS
NO SCALE

NOTES:
1. FOR ACCESSIBLE STALL DETAILS, SEE RSP A90A.
2. PARKING STALLS ALONG MONTANA St AND HAROLD St ARE 16' LONG, EXCEPT THE ADA STALLS WHICH ARE 18' LONG.

PAVEMENT DELINEATION PLAN
SCALE: 1" = 20'

APPROVED FOR PAVEMENT DELINEATION WORK ONLY

PD-1

REVISED BY	DATE REVISED
JC	5-26-16

CALCULATED-DESIGNED BY: SHI LAM
CHECKED BY: JAMES CHUANG
FUNCTIONAL SUPERVISOR: EMILY TANG

STATE OF CALIFORNIA - DEPARTMENT OF TRANSPORTATION
Caltrans TRAFFIC

LAST REVISION 05-25-16 | DATE PLOTTED => 09-AUG-2016 | TIME PLOTTED => 13:17

Dist	COUNTY	ROUTE	POST MILES TOTAL PROJECT	SHEET No.	TOTAL SHEETS
04	Ala	580	41.5	42	123

REGISTERED CIVIL ENGINEER DATE 5-26-16

PLANS APPROVAL DATE 6-7-16

REGISTERED PROFESSIONAL ENGINEER Shi F. Lam No. 50970 Exp. 9-30-17 CIVIL STATE OF CALIFORNIA

THE STATE OF CALIFORNIA OR ITS OFFICERS OR AGENTS SHALL NOT BE RESPONSIBLE FOR THE ACCURACY OR COMPLETENESS OF SCANNED COPIES OF THIS PLAN SHEET.

NOTE:

FOR ACCURATE RIGHT OF WAY DATA, CONTACT RIGHT OF WAY ENGINEERING AT THE DISTRICT OFFICE.

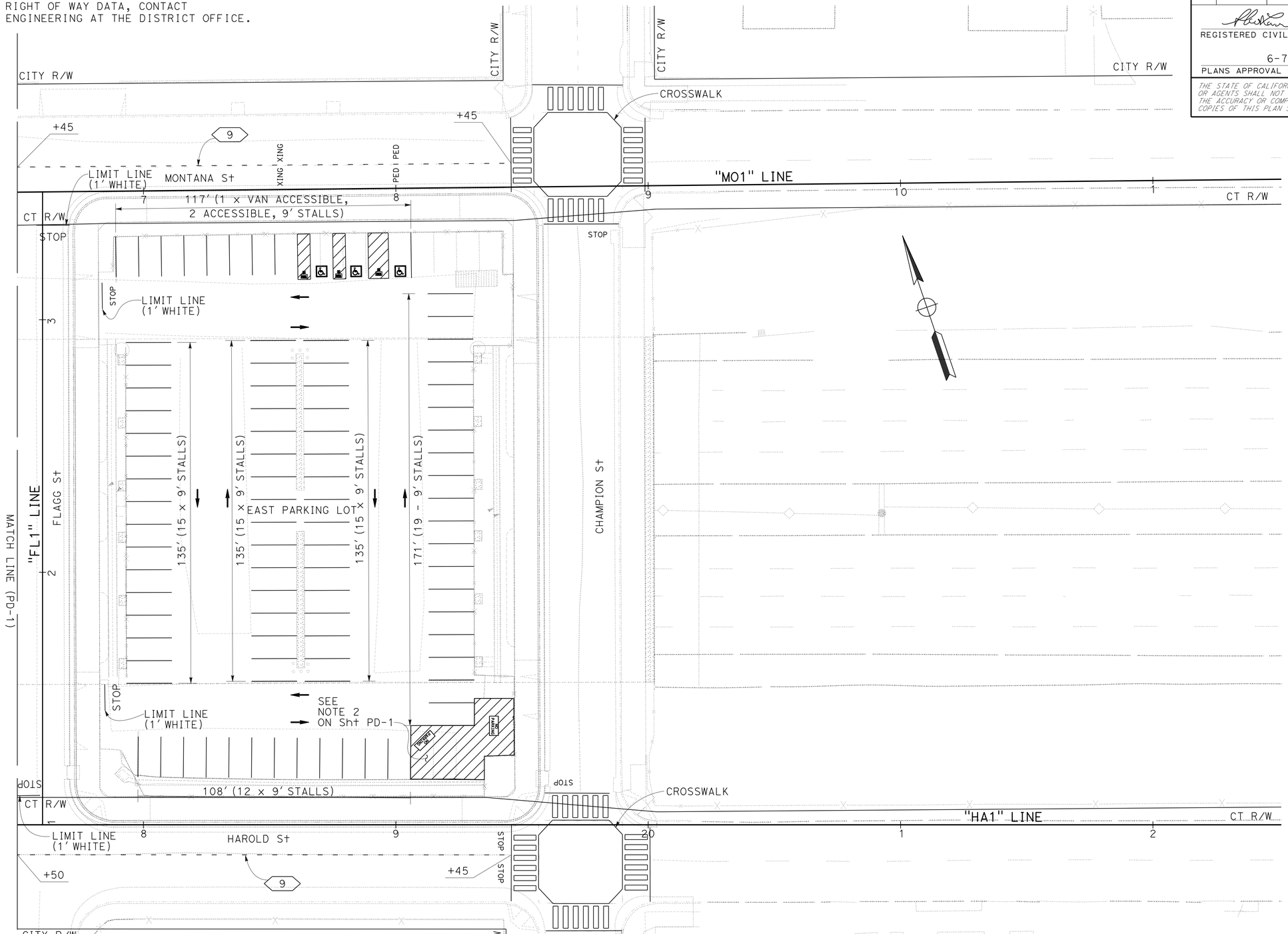

APPROVED FOR PAVEMENT DELINEATION WORK ONLY

FOR NOTES, ABBREVIATIONS AND LEGEND, SEE SHEET PD-1

PAVEMENT DELINEATION PLAN

SCALE: 1" = 20'

PD-2

JC	5-26-16	SHI LAM	JAMES CHUANG
REVISED BY	DATE REVISED	CALCULATED-DESIGNED BY	CHECKED BY

FUNCTIONAL SUPERVISOR: EMILY TANG

STATE OF CALIFORNIA - DEPARTMENT OF TRANSPORTATION

Caltrans

TRAFFIC

LAST REVISION 05-25-16 | DATE PLOTTED => 09-AUG-2016 | TIME PLOTTED => 13:17

Dist	COUNTY	ROUTE	POST MILES TOTAL PROJECT	SHEET No.	TOTAL SHEETS
04	Ala	580	41.5	43	123

REGISTERED CIVIL ENGINEER DATE 5-26-16

PLANS APPROVAL DATE 6-7-16

REGISTERED PROFESSIONAL ENGINEER Jay Kin-Kwok Fong No. 72112 Exp. 6-30-16 CIVIL STATE OF CALIFORNIA

THE STATE OF CALIFORNIA OR ITS OFFICERS OR AGENTS SHALL NOT BE RESPONSIBLE FOR THE ACCURACY OR COMPLETENESS OF SCANNED COPIES OF THIS PLAN SHEET.

ABBREVIATION:

ADA AMERICAN DISABILITIES ACT

TRAFFIC STRIPES, PAVEMENT MARKINGS AND PAVEMENT MARKERS

SHEET No.	STATION LIMIT	STREET/LOCATION	DETAIL No. OR PAVEMENT MARKING	REMOVE THERMOPLASTIC PAVEMENT MARKING		REMOVE PAVEMENT MARKER	REMOVE THERMOPLASTIC TRAFFIC STRIPE	4" THERMOPLASTIC TRAFFIC STRIPE			PAVEMENT MARKER (RETROREFLECTIVE)	THERMOPLASTIC PAVEMENT MARKING
				WHITE	YELLOW THERMOPLASTIC (HAZARDOUS WASTE)		4" WHITE BROKEN	WHITE SOLID	BLUE SOLID	WHITE BROKEN	TYPE G	
				SQFT		EA	LF				EA	SQFT
PD-1	"MO1" 4+81 TO 6+31	MONTANA St	9			5	44			44	5	
	"MO1" 6+30 TO 6+40	MONTANA St	CROSSWALK	60								156
	"HA1" 15+80 TO 17+50	HAROLD St	9				10			50	5	
	"HA1" 16+00, 16+50, 17+00	HAROLD St	SLOW SCHOOL XING		79							158
	WEST PARKING LOT	TRAFFIC AISLE	TYPE I ARROW									112
	WEST PARKING LOT	NO PARKING AREA	NO PARKING					56				4
	WEST PARKING LOT	PARKING STALL	4" SOLID WHITE STRIPES					684				
	WEST PARKING LOT	ADA STALL	4" SOLID BLUE STRIPES						96			
	WEST PARKING LOT	ADA STALL	ISA MARKING									69
	WEST PARKING LOT	ADA STALL	NO PARKING									6
	WEST PARKING LOT	ENTRANCE/EXIT	STOP									44
	WEST PARKING LOT	ENTRANCE/EXIT	LIMIT LINE									26
PD-2	"MO1" 6+45 TO 8+45	MONTANA St	9			6	59			59	6	
	"MO1" 7+50, 8+00	MONTANA St	PED XING	78								78
	"MO1" 8+45 TO 9+00	MONTANA St	CROSSWALK		240							624
	"FL1" 1+15, 3+32	CHAMPION St	STOP									44
	"HA1" 17+50 TO 19+45	HAROLD St	9							57	6	
	"HA1" 19+45 TO 20+00	HAROLD St	CROSSWALK		240							624
	"HA1" 19+40	HAROLD St	STOP									44
	"FL1" 1+15, 3+32	FLAGG St	STOP									44
	"FL1" 1+10, 3+37	FLAGG St	LIMIT LINE									26
	EAST PARKING LOT	TRAFFIC AISLE	TYPE I ARROW									112
	EAST PARKING LOT	NO PARKING AREA	NO PARKING					96				4
	EAST PARKING LOT	PARKING STALL	4" SOLID WHITE STRIPES					684				
	EAST PARKING LOT	ADA STALL	4" SOLID BLUE STRIPES						96			
	EAST PARKING LOT	ADA STALL	ISA MARKING									69
	EAST PARKING LOT	ADA STALL	NO PARKING					56				6
	EAST PARKING LOT	ENTRANCE/EXIT	STOP									44
	EAST PARKING LOT	ENTRANCE/EXIT	LIMIT LINE									26
SUBTOTAL				138	559	11	113	1576	192	210	22	2320
PAVEMENT MARKER QUANTITIES FROM SHEET THQ-1						11					11	
TOTAL				138	559	22	113	1978			33	2320

PAVEMENT DELINEATION QUANTITIES

PDQ-1

STATE OF CALIFORNIA - DEPARTMENT OF TRANSPORTATION

Caltrans® DESIGN

FUNCTIONAL SUPERVISOR: RONALD TSUNG

CALCULATED-DESIGNED BY: JAY FONG

CHECKED BY: VINCE BONNER

REVISED BY: JC

DATE REVISED: 5-26-16

LAST REVISION DATE PLOTTED => 09-AUG-2016 TIME PLOTTED => 13:17

05-25-16

Dist	COUNTY	ROUTE	POST MILES TOTAL PROJECT	SHEET No.	TOTAL SHEETS
04	Ala	580	41.5	44	123

REGISTERED CIVIL ENGINEER 5-26-16 DATE

6-7-16
PLANS APPROVAL DATE

REGISTERED PROFESSIONAL ENGINEER Rachel Liu No. 74807 Exp. 12-31-17 CIVIL STATE OF CALIFORNIA

THE STATE OF CALIFORNIA OR ITS OFFICERS OR AGENTS SHALL NOT BE RESPONSIBLE FOR THE ACCURACY OR COMPLETENESS OF SCANNED COPIES OF THIS PLAN SHEET.

NOTE:

FOR ACCURATE RIGHT OF WAY DATA, CONTACT RIGHT OF WAY ENGINEERING AT THE DISTRICT OFFICE.

NOTES:

1. EXACT LOCATION AND POSITION OF ROADSIDE SIGNS TO BE DETERMINED BY THE ENGINEER.
2. POST SIZE AND LENGTH GIVEN ARE APPROXIMATE. EXACT SIZE AND LENGTH TO BE DETERMINED BY THE ENGINEER.
2. ALL EXISTING SIGNS NOT SHOWN SHALL REMAIN IN PLACE.

LEGEND:

✳ ROUTSIDE SIGN/OVERHEAD SIGN TO REMAIN
■ REMOVE ROADSIDE SIGN
(No.) ROADSIDE SIGN NUMBER

ABBREVIATION:

CT CALTRANS

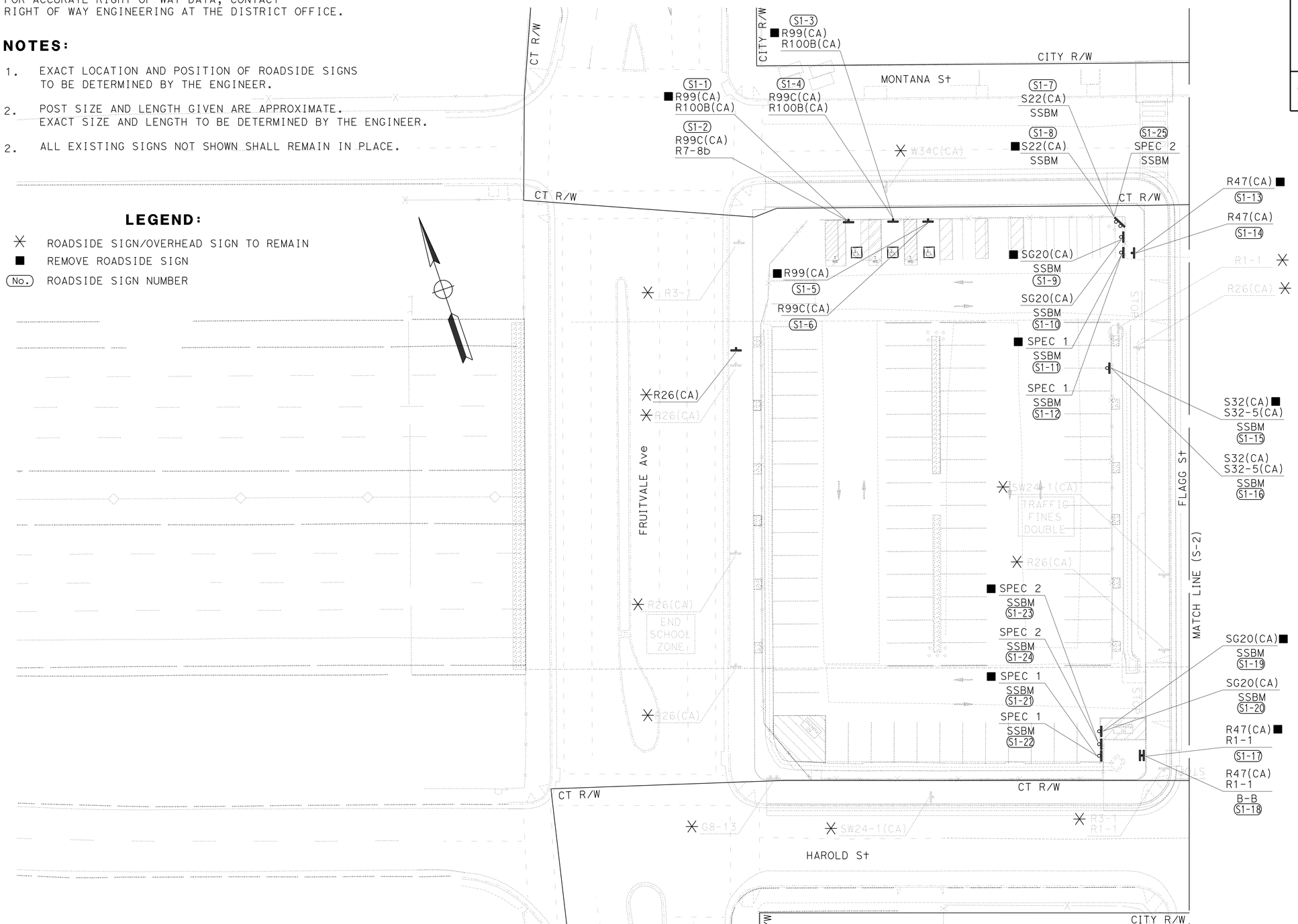

SIGN PLAN

SCALE: 1" = 20'

APPROVED FOR SIGN WORK ONLY

S-1

STATE OF CALIFORNIA - DEPARTMENT OF TRANSPORTATION
Caltrans® TRAFFIC

FUNCTIONAL SUPERVISOR: LOURDES DAVID
CALCULATED-DESIGNED BY: RACHEL LIU
CHECKED BY: CLAUDIA FANG
REVISED BY: JC
DATE REVISED: 5-26-16

LAST REVISION 05-25-16 | DATE PLOTTED => 09-AUG-2016 | TIME PLOTTED => 13:17

Dist	COUNTY	ROUTE	POST MILES TOTAL PROJECT	SHEET No.	TOTAL SHEETS
04	Ala	580	41.5	45	123

REGISTERED CIVIL ENGINEER 5-26-16 DATE

6-7-16
PLANS APPROVAL DATE

REGISTERED PROFESSIONAL ENGINEER Rachel Liu No. 74807 Exp. 12-31-17 CIVIL STATE OF CALIFORNIA

THE STATE OF CALIFORNIA OR ITS OFFICERS OR AGENTS SHALL NOT BE RESPONSIBLE FOR THE ACCURACY OR COMPLETENESS OF SCANNED COPIES OF THIS PLAN SHEET.

NOTE:

FOR ACCURATE RIGHT OF WAY DATA, CONTACT RIGHT OF WAY ENGINEERING AT THE DISTRICT OFFICE.

APPROVED FOR SIGN WORK ONLY

FOR NOTES, ABBREVIATIONS AND LEGEND, SEE SHEET S-1

SIGN PLAN

SCALE: 1" = 20'

S-2

STATE OF CALIFORNIA - DEPARTMENT OF TRANSPORTATION
Caltrans
TRAFFIC

CALCULATED-DESIGNED BY	RACHEL LIU	REVISED BY	JC
CHECKED BY	CLAUDIA FANG	DATE REVISED	5-26-16
FUNCTIONAL SUPERVISOR	LOURDES DAVID		

LAST REVISION 05-02-16 | DATE PLOTTED => 09-AUG-2016 | TIME PLOTTED => 13:17

Dist	COUNTY	ROUTE	POST MILES TOTAL PROJECT	SHEET No.	TOTAL SHEETS
04	Ala	580	41.5	46	123

REGISTERED CIVIL ENGINEER 5-26-16 DATE

6-7-16
PLANS APPROVAL DATE

REGISTERED PROFESSIONAL ENGINEER Rachel Liu No. 74807 Exp. 12-31-17 CIVIL STATE OF CALIFORNIA

THE STATE OF CALIFORNIA OR ITS OFFICERS OR AGENTS SHALL NOT BE RESPONSIBLE FOR THE ACCURACY OR COMPLETENESS OF SCANNED COPIES OF THIS PLAN SHEET.

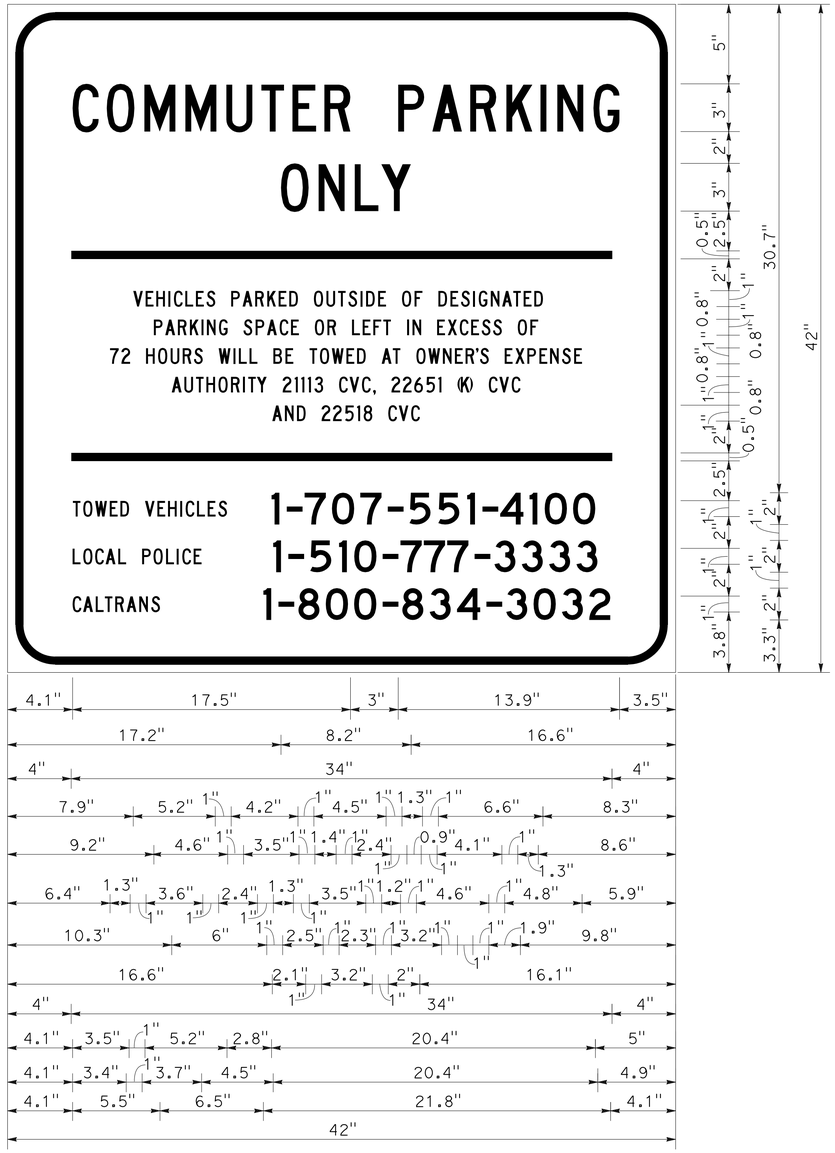

3.0" RADIUS, 0.5" BORDER, 0.5" INDENT, BLACK ON WHITE;
[COMMUTER PARKING] C; [ONLY] C; [VEHICLES PARKED OUTSIDE OF DESIGNATED] C;
[PARKING SPACE OR LEFT IN EXCESS OF] C;
[72 HOURS WILL BE TOWED AT OWNER'S EXPENSE] C;
[AUTHORITY 21113 CVC, 22651 (K) CVC] C; [AND 22518 CVC] C;
[TOWED VEHICLES] C; [1-707-551-4100] D;
[LOCAL POLICE] C; [1-510-777-3333] D; [CALTRANS] C; [1-800-834-3032] D;

SPEC 1

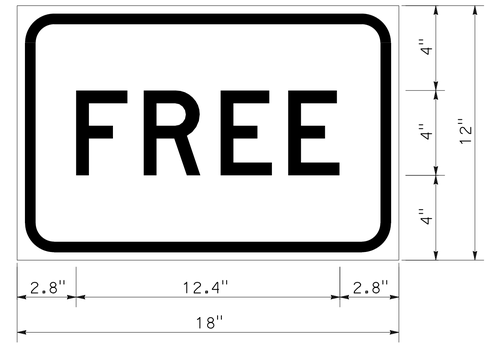

1.8" RADIUS, 0.5" BORDER, 0.4" INDENT, BLACK ON WHITE;
[FREE] D;

SPEC 2

SIGN DETAILS

NO SCALE

SD-1

STATE OF CALIFORNIA - DEPARTMENT OF TRANSPORTATION
Caltrans® TRAFFIC

FUNCTIONAL SUPERVISOR: LOURDES DAVID
CALCULATED-DESIGNED BY: RACHEL LIU
CHECKED BY: CLAUDIA FANG
REVISED BY: JC
DATE REVISED: 5-26-16

LAST REVISION 04-22-16 | DATE PLOTTED => 09-AUG-2016 | TIME PLOTTED => 13:17

Dist	COUNTY	ROUTE	POST MILES TOTAL PROJECT	SHEET No.	TOTAL SHEETS
04	Ala	580	41.5	47	123

REGISTERED CIVIL ENGINEER 5-26-16 DATE

6-7-16
PLANS APPROVAL DATE

REGISTERED PROFESSIONAL ENGINEER Rachel Liu No. 74807 Exp. 12-31-17 CIVIL STATE OF CALIFORNIA

THE STATE OF CALIFORNIA OR ITS OFFICERS OR AGENTS SHALL NOT BE RESPONSIBLE FOR THE ACCURACY OR COMPLETENESS OF SCANNED COPIES OF THIS PLAN SHEET.

ROADSIDE SIGN QUANTITIES

SHEET No.	SIGN No.	SIGN CODE		SIGN PANEL SIZE	POST SIZE AND LENGTH		ROADSIDE SIGN		REMOVE ROADSIDE SIGN		FURNISH SINGLE SHEET ALUMINUM SIGN - UNFRAMED FOR RETROREFLECTIVE SHEETING (TYPE XI)		RETROREFLECTIVE SHEETING (TYPE XI)	SINGLE FACED	BACKGROUND		LEGEND		PREMIUM PROTECTIVE FILM	REMARKS
		FEDERAL	CALIFORNIA	INCHES	4" x 4"	4" x 6"	ONE POST	SSBM	ONE POST	SSBM	0.063"	0.080"			SHEETING COLOR	RETROREFLECTIVE ASTM TYPE	SHEETING COLOR	RETROREFLECTIVE ASTM TYPE		
							EA				SQFT									
S-1	S1-1		R99(CA)						1											
			R100B(CA)																	
	S1-2		R99C(CA)	12 x 24	13		1				2		2	X	BLUE	XI	WHITE	PLAIN	X	BY TELEPHONE (707) 551-4100
		R7-8b		12 x 6							0.50		0.50	X	WHITE	XI	BLACK	PLAIN	X	
	S1-3		R99(CA)						1											
			R100B(CA)																	
	S1-4		R99C(CA)	12 x 24		15.50	1				2		2	X	BLUE	XI	WHITE	PLAIN	X	BY TELEPHONE (707) 551-4100
			R100B(CA)	24 x 24							4		4	X	WHITE	XI	BLACK	PLAIN	X	
	S1-5		R99(CA)						1											
	S1-6		R99C(CA)	12 x 24	12.50		1				2		2	X	BLUE	XI	WHITE	PLAIN	X	
	S1-7		S22(CA)	48 x 30				1				10	10	X	WHITE	XI	BLACK	PLAIN	X	SSBM, ATTACHED TO FENCE
	S1-8		S22(CA)							1										SSBM, ATTACHED TO FENCE
	S1-9		SG20(CA)							1										SSBM, ATTACHED TO FENCE
	S1-10		SG20(CA)	48 x 36				1				12	12	X	BLUE	XI	WHITE	PLAIN	X	SSBM, ATTACHED TO FENCE, INFO CALL 1-800-834-3032
	S1-11		SPEC 1							1										SSBM, ATTACHED TO FENCE
	S1-12		SPEC 1	36 x 36				1			9		9	X	WHITE	XI	BLACK	PLAIN	X	SSBM, ATTACHED TO FENCE
	S1-13		R47(CA)						1											
	S1-14		R47(CA)	54 x 36		14.50	1					13.50	13.50	X	WHITE	XI	BLACK	PLAIN	X	
	S1-15		S32(CA)							1										SSBM, ATTACHED TO FENCE
			S32-5(CA)																	
	S1-16		S32(CA)	36 x 30				1			7.50		7.50	X	PANTONE 327C	XI	WHITE	PLAIN	X	SSBM, ATTACHED TO FENCE US CG TRAINING TEAM
			S32-5(CA)	15 x 18							1.88		1.88	X	WHITE	XI	MULTIPLE	PLAIN	X	
	S1-17		R47(CA)						1											
		R1-1																		
	S1-18		R47(CA)	54 x 36		14.50	1					13.50	13.50	X	WHITE	XI	BLACK	PLAIN	X	BACK TO BACK
		R1-1		30 x 30							6.25		6.25	X	WHITE	XI	RED	PLAIN	X	
	S1-19		SG20(CA)							1										SSBM, ATTACHED TO FENCE
	S1-20		SG20(CA)	48 x 36				1				12	12	X	BLUE	XI	WHITE	PLAIN	X	SSBM, ATTACHED TO FENCE, INFO CALL 1-800-834-3032
	S1-21		SPEC 1							1										SSBM, ATTACHED TO FENCE
	S1-22		SPEC 1	36 x 36				1			9		9	X	WHITE	XI	BLACK	PLAIN	X	SSBM, ATTACHED TO FENCE
	S1-23		SPEC 2							1										SSBM, ATTACHED TO FENCE
	S1-24		SPEC 2	18 x 12				1			1.50		1.50	X	WHITE	XI	BLACK	PLAIN	X	SSBM, ATTACHED TO FENCE
	S1-25		SPEC 2	18 x 12				1			1.50		1.50	X	WHITE	XI	BLACK	PLAIN	X	SSBM, ATTACHED TO FENCE
TOTAL							5	8	5	7	47.13	61	108.13							

SIGN QUANTITIES

SQ-1

STATE OF CALIFORNIA - DEPARTMENT OF TRANSPORTATION
Caltrans TRAFFIC

FUNCTIONAL SUPERVISOR: LOURDES DAVID
CALCULATED-DESIGNED BY: RACHEL LIU
CHECKED BY: CLAUDIA FANG
REVISED BY: JC
DATE REVISED: 5-26-16

LAST REVISION 04-29-16 | DATE PLOTTED => 09-AUG-2016 | TIME PLOTTED => 13:17

Dist	COUNTY	ROUTE	POST MILES TOTAL PROJECT	SHEET No.	TOTAL SHEETS
04	Ala	580	41.5	48	123

REGISTERED CIVIL ENGINEER 5-26-16 DATE

6-7-16
PLANS APPROVAL DATE

REGISTERED PROFESSIONAL ENGINEER Rachel Liu No. 74807 Exp. 12-31-17 CIVIL STATE OF CALIFORNIA

THE STATE OF CALIFORNIA OR ITS OFFICERS OR AGENTS SHALL NOT BE RESPONSIBLE FOR THE ACCURACY OR COMPLETENESS OF SCANNED COPIES OF THIS PLAN SHEET.

ROADSIDE SIGN QUANTITIES (CONTINUATION)

SHEET No.	SIGN No.	SIGN CODE FEDERAL	SIGN CODE CALIFORNIA	SIGN PANEL SIZE INCHES	POST SIZE AND LENGTH 4" x 4"	POST SIZE AND LENGTH 4" x 6"	ROADSIDE SIGN ONE POST (EA)	ROADSIDE SIGN SSBM (EA)	REMOVE ROADSIDE SIGN ONE POST (EA)	REMOVE ROADSIDE SIGN SSBM (EA)	FURNISH SINGLE SHEET ALUMINUM SIGN - UNFRAMED FOR RETROREFLECTIVE SHEETING (TYPE XI) 0.063" (SQFT)	FURNISH SINGLE SHEET ALUMINUM SIGN - UNFRAMED FOR RETROREFLECTIVE SHEETING (TYPE XI) 0.080" (SQFT)	RETROREFLECTIVE SHEETING (TYPE XI) (SQFT)	SINGLE FACED	BACKGROUND SHEETING COLOR	BACKGROUND RETROREFLECTIVE ASTM TYPE	LEGEND SHEETING COLOR	LEGEND RETROREFLECTIVE ASTM TYPE	PREMIUM PROTECTIVE FILM	REMARKS
S-2	S2-1		R47(CA)	54 x 36		14.5	1					13.50	13.50	X	WHITE	XI	BLACK	PLAIN	X	BACK TO BACK
		R1-1		30 x 30							6.25		6.25	X	WHITE	XI	RED	PLAIN	X	
	S2-2		R47(CA)						1											
		R1-1																		
	S2-3		SPEC1							1										SSBM, ATTACHED TO FENCE
	S2-4		SPEC1	36 x 36				1			9		9	X	WHITE	XI	BLACK	PLAIN	X	SSBM, ATTACHED TO FENCE
	S2-5		SPEC2							1										SSBM, ATTACHED TO FENCE
	S2-6		SPEC2	18 x 12				1			1.50		1.50	X	WHITE	XI	BLACK	PLAIN	X	SSBM, ATTACHED TO FENCE
	S2-7		R16B(CA)						1											
		R6-1R																		
	S2-8	R3-1		24 x 24	12.5		1				4		4	X	WHITE	XI	RED/BLACK	PLAIN	X	BACK TO BACK
		R6-1R		36 x 12							3		3	X	BLACK	XI	WHITE/BLACK	PLAIN	X	
	S2-9		S22(CA)							1										SSBM, ATTACHED TO FENCE
	S2-10		S22(CA)	48 x 30				1				10	10	X	WHITE	XI	BLACK	PLAIN	X	SSBM, ATTACHED TO FENCE
	S2-11		SG20(CA)							1										SSBM, ATTACHED TO FENCE
	S2-12		SG20(CA)	48 x 36				1				12	12	X	BLUE	XI	WHITE	PLAIN	X	SSBM, ATTACHED TO FENCE INFO, CALL 1-800-834-3032
	S2-13		R16B(CA)						1											
		R1-1																		
	S2-14	R3-1		24 x 24		16	1				4		4	X	WHITE	XI	RED/BLACK	PLAIN	X	
		R1-1		30 x 30							6.25		6.25	X	WHITE	XI	RED	PLAIN	X	
	S2-15		SPEC1							1										SSBM, ATTACHED TO FENCE
	S2-16		SPEC1	36 x 36				1			9		9	X	WHITE	XI	BLACK	PLAIN	X	SSBM, ATTACHED TO FENCE
	S2-17		SPEC2							1										SSBM, ATTACHED TO FENCE
	S2-18		SPEC2	18 x 12				1			1.50		1.50	X	WHITE	XI	BLACK	PLAIN	X	SSBM, ATTACHED TO FENCE
	S2-19		SG20(CA)							1										SSBM, ATTACHED TO FENCE
	S2-20		SG20(CA)	48 x 36				1				12	12	X	BLUE	XI	WHITE	PLAIN	X	SSBM, ATTACHED TO FENCE INFO, CALL 1-800-834-3032
	S2-21		R47(CA)						1											
	S2-22		R47(CA)	54 x 36		14.5	1					13.50	13.50	X	WHITE	XI	BLACK	PLAIN	X	
	S2-23		S22(CA)							1										SSBM, ATTACHED TO FENCE
	S2-24		S22(CA)	48 x 30				1				10	10	X	WHITE	XI	BLACK	PLAIN	X	SSBM, ATTACHED TO FENCE
	S2-25		R26(CA)						1											
	S2-26		R26(CA)	12 x 18	12		1				1.50		1.50	X	WHITE	XI	RED	PLAIN	X	
	S2-27		R17B(CA)						1											
		R1-1																		
	S2-28	R3-2		24 x 24		16	1				4		4	X	WHITE	XI	RED/BLACK	PLAIN	X	
		R1-1		30 x 30							6.25		6.25	X	WHITE	XI	RED	PLAIN	X	
	S2-29		R99C(CA)	12 x 24		15.50	1				2		2	X	BLUE	XI	WHITE	PLAIN	X	BY TELEPHONE (707) 551-4100
			R100B(CA)	24 x 24							4		4	X	WHITE	XI	BLACK	PLAIN	X	
	S2-30		R99C(CA)	12 x 24	12.50		1				2		2	X	BLUE	XI	WHITE	PLAIN	X	
	S2-31		R99C(CA)	12 x 24	13		1				2		2	X	BLUE	XI	WHITE	PLAIN	X	BY TELEPHONE (707) 551-4100
		R7-8b		12 x 6							0.50		0.50	X	WHITE	XI	BLACK	PLAIN	X	
TOTAL							9	8	6	8	66.75	71	137.75							
TOTAL FROM SHEET SQ-1							5	8	5	7	47.13	61	108.13							
GRAND TOTAL							14	16	11	15	113.88	132	245.88							

SIGN QUANTITIES

SQ-2

STATE OF CALIFORNIA - DEPARTMENT OF TRANSPORTATION
Caltrans TRAFFIC

FUNCTIONAL SUPERVISOR: LOURDES DAVID
CALCULATED-DESIGNED BY: RACHEL LIU
CHECKED BY: CLAUDIA FANG
REVISED BY: JC
DATE REVISED: 5-26-16

LAST REVISION 04-29-16
DATE PLOTTED => 09-AUG-2016
TIME PLOTTED => 13:17

Dist	COUNTY	ROUTE	POST MILES TOTAL PROJECT	SHEET No.	TOTAL SHEETS
04	Ala	580	41.5	49	123

REGISTERED CIVIL ENGINEER 5-30-16 DATE

6-7-16
PLANS APPROVAL DATE

REGISTERED PROFESSIONAL ENGINEER James Chuang No. 74690 Exp. 12-31-17 CIVIL STATE OF CALIFORNIA

THE STATE OF CALIFORNIA OR ITS OFFICERS OR AGENTS SHALL NOT BE RESPONSIBLE FOR THE ACCURACY OR COMPLETENESS OF SCANNED COPIES OF THIS PLAN SHEET.

PARKING LOTS

SHEET No.	STATION LIMIT	LOCATION	ROADWAY EXCAVATION	REMOVE CONCRETE (CURB, GUTTER AND SIDEWALK)	MINOR CONCRETE (CURB, GUTTER, SIDEWALK AND DRIVEWAY)	CLASS 2 AB	HOT MIX ASPHALT (TYPE A)	TACK COAT	PRIME COAT
			CY				TON		
L-1	"MO1" 4+84.54 TO 6+24.30	WEST PARKING LOT ASPHALT AREA ONLY	325.7				737	0.7	1
	"FL1" 1+65.14 TO 2+85.41	LOCATION 14 PERMEABLE AREA	10.6		6.1	4.6			
	"FL1" 1+53.69 TO 2+88.50	LOCATION 15 PERMEABLE AREA	19.3		11	8.3			
		LOCATION 15 HARDSCAPED AREA	2.7	3.6	3.6	2.7			
	"FL1" 1+49.26 TO "HA1" 17+16.17	EXISTING PCC V-DITCH		6.1	6.1				
L-2	"MO1" 6+87.61 TO 8+46.17	EAST PARKING LOT ASPHALT AREA ONLY	350.1				792	0.8	1.1
	"FL1" 1+65.86 TO 2+89.98	LOCATION 16 PERMEABLE AREA	12.2		6.9	5.3			
		LOCATION 16 HARDSCAPED AREA	2.7	3.5	3.5	2.7			
	"FL1" 1+58.87 TO 2+89.79	LOCATION 17 PERMEABLE AREA	27.6		15.7	11.9			
		LOCATION 17 HARDSCAPED AREA	2.4	3.1	3.1	2.4			
	"HA1" 17+96.65 TO 19+34.96	EXISTING PCC V-DITCH		5.3	5.3				
		BIKE LOCKERS FOUNDATION			1.9	1.5			
TOTAL			753.3	21.6	63.2	39.4	1529	1.5	2.1

SIDEWALK, CURB AND GUTTER

SHEET No.	STATION LIMIT	LOCATION	ROADWAY EXCAVATION	REMOVE CONCRETE (CURB, GUTTER AND SIDEWALK)		MINOR CONCRETE (CURB, GUTTER, SIDEWALK AND DRIVEWAY)		CLASS 2 AB			HOT MIX ASPHALT (TYPE A)	TACK COAT	PRIME COAT	DETECTABLE WARNING SURFACE	ADJUST MONUMENT TO GRADE	ADJUST PULL BOX	ADJUST UTILITY COVER	PRE/POST CONSTRUCTION SURVEYS
			ROADWAY	SIDEWALK	CURB AND GUTTER	SIDEWALK	CURB AND GUTTER	SIDEWALK	CURB AND GUTTER	ROADWAY								
			CY								TON			SQFT	EA			
L-1	"FL1" 1+57.19 TO 2+84.14	FLAGG St	9.5	25.8	8.9	14.7	8.1	11.1	3.2	4.8	9.8	0.1	0.1					
	"MO1"4+83.24 TO 6+17.61	MONTANA St	10	27.3	11.8	15.5	8.5	11.8	3.3	5	10.3	0.1	0.1					
	"HA1" 15+83.76 TO 17+16.29	HAROLD St	9.9	26.9	11.8	15.3	8.5	11.6	3.3	5	10.2	0.1	0.1					
	"MO1" 6+29.41 TO 6+43.84	CURB RAMP LOCATION 1	1.5	5.5	1.9	3.1	1.4	2.4	0.6	0.8	1.6	0.1	0.1	12.75			1	1
	"MO1" 6+17.61 TO "FL1" 2+84.14	CURB RAMP LOCATION 2	6.5	16.3	7.4	9.3	5.4	7	2.1	3.3	6.7	0.1	0.1	12.75		1		1
	"HA1" 17+16.29 TO "FL1" 1+57.19	CURB RAMP LOCATION 3	6.1	14.6	6.8	8.3	4.9	6.3	1.9	3.1	6.3	0.1	0.1	12.75				1
L-2	"FL1" 1+60.44 TO 2+88.91	FLAGG St	9.6	26.1	9.0	14.8	8.2	11.3	3.2	4.8	9.9	0.1	0.1					
	"FL1" 1+65.24 TO 2+82.67	CHAMPION St	8.7	23.9	8.2	13.6	7.5	10.3	2.9	4.4	9	0.1	0.1					
	"MO1" 7+01.17 TO 8+25.21	MONTANA St	9.2	25.2	11	14.3	7.9	10.9	3.1	4.6	9.5	0.1	0.1					
	"HA1" 18+02.63 TO 19+26.26	HAROLD St	9.2	25.1	11.9	14.3	7.8	10.8	3.1	4.6	9.5	0.1	0.1					
	"FL1" 2+88.91 TO "MO1" 7+01.17	CURB RAMP LOCATION 4	6.5	16.9	7.5	9.6	5.4	7.3	2.1	3.3	6.7	0.1	0.1	12.75			1	1
	"FL1" 1+60.44 TO "HA1" 18+02.63	CURB RAMP LOCATION 5	6.5	15.7	6.6	8.9	4.7	6.8	1.9	3.3	6.7	0.1	0.1	12.75				1
	"MO1" 8+39.20 TO 8+52.52	CURB RAMP LOCATION 6	1.9	3	2.1	1.7	1.4	1.3	0.7	1	1.9	0.1	0.1	12.75			1	1
	"MO1" 8+25.21 TO "FL1" 2+82.67	CURB RAMP LOCATION 7	7.3	18.1	8.4	10.3	5.9	7.8	2.4	3.7	7.5	0.1	0.1	12.75				1
	"HA1" 19+26.26 TO "FL1" 1+65.24	CURB RAMP LOCATION 8	7	16.4	7.5	9.3	5.4	7.1	2.1	3.5	7.3	0.1	0.1	12.75				1
	"HA1" 19+37.46 TO 19+57.60	CURB RAMP LOCATION 9	3.9	8.6	6.6	4.9	4.6	3.7	2	2	4.1	0.1	0.1	17.93				1
	"MO1" 8+93.11 TO 9+14.97	CURB RAMP LOCATION 10	1.8	5.7	4.2	3.2	2.8	2.5	1.3	0.9	1.8	0.1	0.1	20.97	1			1
	"MO1" 8+88.62 TO 9+00.55	CURB RAMP LOCATION 11	2.2	8.4	2.5	4.8	1.7	3.6	0.8	1.1	2.3	0.1	0.1	9.89				1
	"HA1" 19+89.57 TO 20+03.35	CURB RAMP LOCATION 12	1.9	5.8	2.6	3.3	1.8	2.5	0.8	1	1.9	0.1	0.1	14.45			1	1
	"HA1" 19+90.14 TO 20+21.01	CURB RAMP LOCATION 13	3.4	10	4.4	5.7	3.2	4.3	1.3	1.7	3.5	0.1	0.1	16.84				1
SUBTOTAL			122.6	325.3	141.1	184.9	105.1	140.4	42.1	61.9	126.5	2	2	182.08	1	1	4	13
TOTAL			122.6	466.4		290		244.4			126.5	2	2	182.08	1	1	4	13

SUMMARY OF QUANTITIES

Q-1

STATE OF CALIFORNIA - DEPARTMENT OF TRANSPORTATION
Caltrans DESIGN
FUNCTIONAL SUPERVISOR RONALD TSUNG
CALCULATED-DESIGNED BY JAMES CHUANG
CHECKED BY VINCE BONNER
REVISED BY JF
DATE REVISED 5-30-16

LAST REVISION 05-25-16
DATE PLOTTED => 09-AUG-2016
TIME PLOTTED => 13:17

Dist	COUNTY	ROUTE	POST MILES TOTAL PROJECT	SHEET No.	TOTAL SHEETS
04	Ala	580	41.5	50	123

REGISTERED CIVIL ENGINEER 5-30-16 DATE

6-7-16
PLANS APPROVAL DATE

REGISTERED PROFESSIONAL ENGINEER James Chuang No. 74690 Exp. 12-31-17 CIVIL STATE OF CALIFORNIA

THE STATE OF CALIFORNIA OR ITS OFFICERS OR AGENTS SHALL NOT BE RESPONSIBLE FOR THE ACCURACY OR COMPLETENESS OF SCANNED COPIES OF THIS PLAN SHEET.

CHAIN LINK FENCE

SHEET No.	STATION LIMIT	LOCATION	REMOVE CHAIN LINK FENCE	CHAIN LINK FENCE (TYPE CL-6, VINYL-CLAD)	CHAIN LINK FENCE (TYPE CL-6)	REMOVE GATE (CHAIN LINK)
			LF			EA
L-1	"FL1" 1+33.38 TO 3+13.95	FRUITVALE Ave	181	181		
	"FL1" 1+58.45 TO 2+89.11	FLAGG St	131	131		
	"MO1" 4+84.39 TO 6+24.30	MONTANA St	140	140		
	"HA1" 15+82.69 TO 17+16.31	HAROLD St	134	134		
L-2	"FL1" 1+58.63 TO 2+89.21	FLAGG St	132	132		
	"FL1" 1+27.59 TO 3+18.15	CHAMPION St	191	191		2
	"MO1" 6+87.61 TO 8+46.17	MONTANA St	159	159		
	"HA1" 17+91.12 TO 19+46.93	HAROLD St	156	156		
C-13	CURB RAMP LOCATION 12		15		12	
TOTAL			1239	1224	12	2

PARKING LOT (MISCELLANEOUS)

SHEET No.	STATION LIMIT	LOCATION	PARKING BUMPER (PRECAST CONCRETE)	TEMPORARY FENCE (TYPE ESA)	REMOVE GUARD POST	GUARD POST	BICYCLE LOCKER	BICYCLE RACK	REMOVABLE BOLLARD	TREATED WOOD WASTE
			EA	LF	EA					LB
L-1	"MO1" 4+84.54 TO 6+24.30	WEST PARKING LOT	85	12	12	12		3	10	800
L-2	"MO1" 6+87.61 TO 8+46.17	EAST PARKING LOT	85	24	10	10	5		11	
TOTAL			170	36	22	22	5	3	21	800

SUMMARY OF QUANTITIES

Q-2

REVISED BY	DATE REVISED
JF	5-30-16

JAMES CHUANG — VINCE BONNER — CALCULATED-DESIGNED BY — CHECKED BY

FUNCTIONAL SUPERVISOR: RONALD TSUNG

STATE OF CALIFORNIA - DEPARTMENT OF TRANSPORTATION — Caltrans — DESIGN

LAST REVISION 05-25-16 — DATE PLOTTED => 09-AUG-2016 — TIME PLOTTED => 13:17

Dist	COUNTY	ROUTE	POST MILES TOTAL PROJECT	SHEET No.	TOTAL SHEETS
04	Ala	580	41.5	51	123

LICENSED LANDSCAPE ARCHITECT

6-7-16
PLANS APPROVAL DATE

LICENSED LANDSCAPE ARCHITECT
DENNIS CALLOWAY No. 2530
Signature
11-30-17
Renewal Date
5-26-16
Date
STATE OF CALIFORNIA

THE STATE OF CALIFORNIA OR ITS OFFICERS OR AGENTS SHALL NOT BE RESPONSIBLE FOR THE ACCURACY OR COMPLETENESS OF SCANNED COPIES OF THIS PLAN SHEET.

NOTE:

FOR ACCURATE RIGHT OF WAY DATA, CONTACT RIGHT OF WAY ENGINEERING AT THE DISTRICT OFFICE.

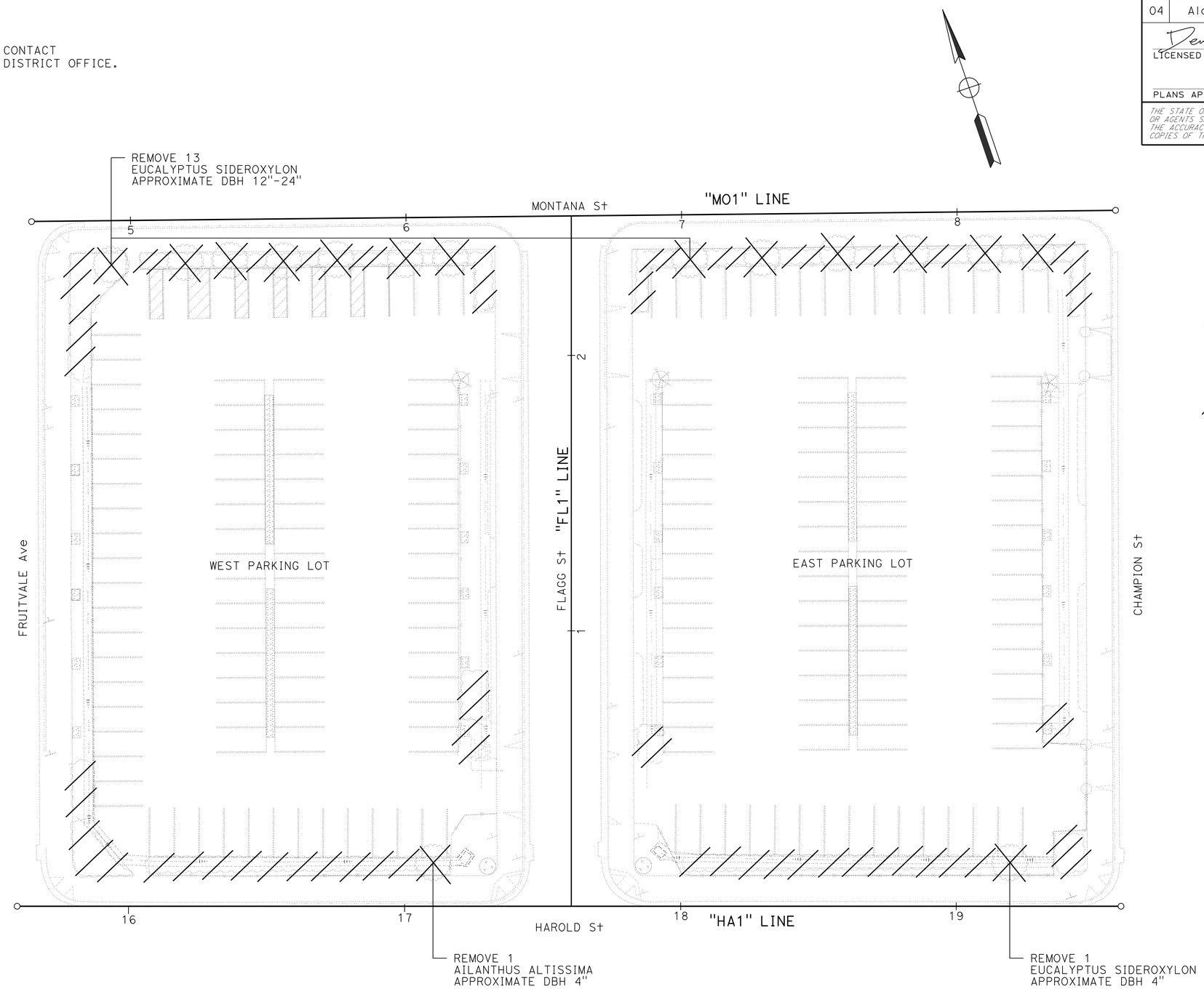

LEGEND:

- REMOVE EXISTING TREE
- REMOVE EXISTING SHRUB AND GROUND COVER
- EXISTING VINE TO REMAIN

PLANT REMOVAL PLAN

SCALE: 1" = 20'

APPROVED FOR PLANTING WORK ONLY

PR-1

DENNIS CALLOWAY	REVISED BY
LYDIA MAC	DATE REVISED
	DC
	5-26-16
CALCULATED-DESIGNED BY	SENIOR LANDSCAPE ARCHITECT
CHECKED BY	LYDIA MAC

STATE OF CALIFORNIA - DEPARTMENT OF TRANSPORTATION
Caltrans® LANDSCAPE ARCHITECTURE

LAST REVISION 06-06-16
DATE PLOTTED => 09-AUG-2016
TIME PLOTTED => 13:17

Dist	COUNTY	ROUTE	POST MILES TOTAL PROJECT	SHEET No.	TOTAL SHEETS
04	Ala	580	41.5	52	123

LICENSED LANDSCAPE ARCHITECT

6-7-16
PLANS APPROVAL DATE

LICENSED LANDSCAPE ARCHITECT — DENNIS CALLOWAY No. 2534 — Signature — 11-30-17 Renewal Date — 5-26-16 Date — STATE OF CALIFORNIA

THE STATE OF CALIFORNIA OR ITS OFFICERS OR AGENTS SHALL NOT BE RESPONSIBLE FOR THE ACCURACY OR COMPLETENESS OF SCANNED COPIES OF THIS PLAN SHEET.

IRRIGATION SPRINKLER SCHEDULE

SYMBOL	DESCRIPTION	SPRAY PATTERN	OPERATING PRESSURE (psi)	PRESSURE COMPENSATING	PLUS/MINUS 5% ② DISCHARGE: GALLONS PER MINUTE (GPM)	DISCHARGE: GALLONS PER HOUR (GPH)	RADIUS (ft)	WIDTH x LENGTH (ft)	FLOW SHUTOFF DEVICE	SPRINKLER ASSEMBLY – RISER: TYPE	RISER – MATERIAL: PLASTIC	RISER – MATERIAL: FLEXIBLE HOSE	RISER: SIZE (IPS INCH)	RISER: HEIGHT (INCH)	RISER: SWING JOINT (TYPE) ⑥	POP-UP: TYPE	POP-UP: INLET CONNECTION (NPT INCH)	POP-UP: SPRINKLER PROTECTOR (TYPE) ④	TREE WELL: HEIGHT (INCH)	REMARKS
•	RISER SPRINKLER ASSEMBLY	-	20	X	0.5	-	-	-	-	V	-	X	½	-	-	-	-	-	-	FLOOD BUBBLER
○	TREE WELL SPRINKLER ASSEMBLY	-	20	X	2.0	-	-	-	-	-	X	-	½	-	II	-	-	-	36	FLOOD BUBBLER

APPLICABLE WHEN CIRCLED BELOW: **X IN BOX DENOTES REQUIREMENT**

1 - SEE SPECIAL PROVISIONS.
② - IF A PRESSURE COMPENSATING DEVICE IS SPECIFIED, THE DISCHARGE AND RADII SHOWN REFLECT ITS USE.
3 - VINYL-COATED CAST IRON HOUSING.
4 - SPRINKLER PROTECTORS REQUIRED ADJACENT TO SHOULDERS, CURBS, SIDEWALKS, AND DIKES.
5 - UNLESS OTHERWISE SHOWN ON PLANS.
⑥ - POP UP ASSEMBLY TYPE IDENTIFIES SWING JOINT.

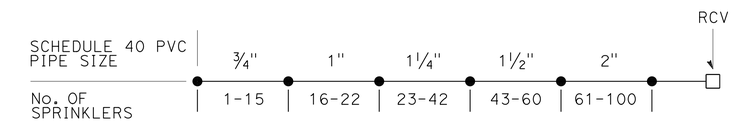

PIPE SIZING FOR 0.5 GPM FLOOD BUBBLERS

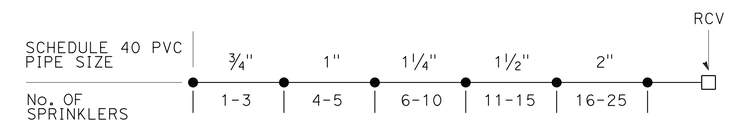

PIPE SIZING FOR 2.0 GPM FLOOD BUBBLERS

PIPE SIZING (FLOOD BUBBLERS)

MODEL WATER EFFICIENT LANDSCAPE ORDINANCE (MWELO): WATER BUDGET CALCULATIONS

SECTION B1: MAXIMUM WATER ALLOWANCE (MAWA)

MAWA = (ETo*0.62)[(ETAF*LA)+(0.3*SLA)]
= (41.8*0.62)[(0.45*13,500)+((0.3*0)]
= (25.92)[(6,075)+(0)]
= (25.92*6,075)

= 157,440 GALLONS PER YEAR

ETo - REFERENCE EVAPOTRANSPIRATION
ETAF - EVAPOTRANSPORATION ADJUSTMENT FACTOR (Max. 0.45)
LA - TOTAL LANDSCAPE AREA (SQFT)
SLA - SPECIAL LANDSCAPE AREA (SQFT)
0.62 - CONVERSION FACTOR (GAL/SQFT)
0.3 - ADDITIONAL WATER ALLOWANCE FOR SLA

SECTION B2: ESTIMATED TOTAL WATER USE (ETWU)

ETWU = (ETo*0.62)(PF*HA/IE+SLA)
= (41.8*0.62)(4,288.15+0)
= (29.14*4,288.15)

= 124,957 GALLONS PER YEAR

ETo - REFERENCE EVAPOTRANSPIRATION
PF - PLANT FACTOR FROM WUCOLS
HA - HYDROZONE AREA (SQFT)
IE - IRRIGATION EFFICIENCY (Min 0.71)
SLA - SPECIAL LANDSCAPE AREA (SQFT)
0.62 - CONVERSION FACTOR (GAL/SQFT)

I AGREE TO COMPLY WITH THE REQUIREMENTS OF THE MODEL WATER EFFICIENCY LANDSCAPE ORDINANCE (MWELO) AND SUBMIT A COMPLETE LANDSCAPE DOCUMENTATION PACKAGE

SIGNATURE DATE: 5-26-16

IRRIGATION SPRINKLER SCHEDULE

APPROVED FOR PLANTING WORK ONLY

ISS-1

REVISED BY	DC
DATE REVISED	5-26-16
DENNIS CALLOWAY	LYDIA MAC
CALCULATED-DESIGNED BY	
CHECKED BY	
SENIOR LANDSCAPE ARCHITECT	LYDIA MAC

STATE OF CALIFORNIA - DEPARTMENT OF TRANSPORTATION
Caltrans® LANDSCAPE ARCHITECTURE

LAST REVISION 06-06-16 | DATE PLOTTED => 09-AUG-2016 | TIME PLOTTED => 13:17

Dist	COUNTY	ROUTE	POST MILES TOTAL PROJECT	SHEET No.	TOTAL SHEETS
04	Ala	580	41.5	53	123

LICENSED LANDSCAPE ARCHITECT

6-7-16
PLANS APPROVAL DATE

THE STATE OF CALIFORNIA OR ITS OFFICERS OR AGENTS SHALL NOT BE RESPONSIBLE FOR THE ACCURACY OR COMPLETENESS OF SCANNED COPIES OF THIS PLAN SHEET.

LICENSED LANDSCAPE ARCHITECT
DENNIS CALLOWAY No.2539
Signature
11-30-17
Renewal Date
5-26-16
Date
STATE OF CALIFORNIA

NOTE:

FOR ACCURATE RIGHT OF WAY DATA, CONTACT
RIGHT OF WAY ENGINEERING AT THE DISTRICT OFFICE.

IRRIGATION REMOVAL PLAN

SCALE: 1" = 20'

APPROVED FOR IRRIGATION WORK ONLY

IR-1

STATE OF CALIFORNIA - DEPARTMENT OF TRANSPORTATION
Caltrans® LANDSCAPE ARCHITECTURE

SENIOR LANDSCAPE ARCHITECT: LYDIA MAC
CALCULATED-DESIGNED BY: DENNIS CALLOWAY
CHECKED BY: LYDIA MAC
REVISED BY: DC
DATE REVISED: 5-26-16

LAST REVISION 06-06-16
DATE PLOTTED => 09-AUG-2016
TIME PLOTTED => 13:17

Dist	COUNTY	ROUTE	POST MILES TOTAL PROJECT	SHEET No.	TOTAL SHEETS
04	Ala	580	41.5	54	123

LICENSED LANDSCAPE ARCHITECT

6-7-16
PLANS APPROVAL DATE

THE STATE OF CALIFORNIA OR ITS OFFICERS OR AGENTS SHALL NOT BE RESPONSIBLE FOR THE ACCURACY OR COMPLETENESS OF SCANNED COPIES OF THIS PLAN SHEET.

LICENSED LANDSCAPE ARCHITECT — DENNIS CALLOWAY — Signature — 11-30-17 Renewal Date — 5-26-16 Date — STATE OF CALIFORNIA

NOTE:

FOR ACCURATE RIGHT OF WAY DATA, CONTACT RIGHT OF WAY ENGINEERING AT THE DISTRICT OFFICE.

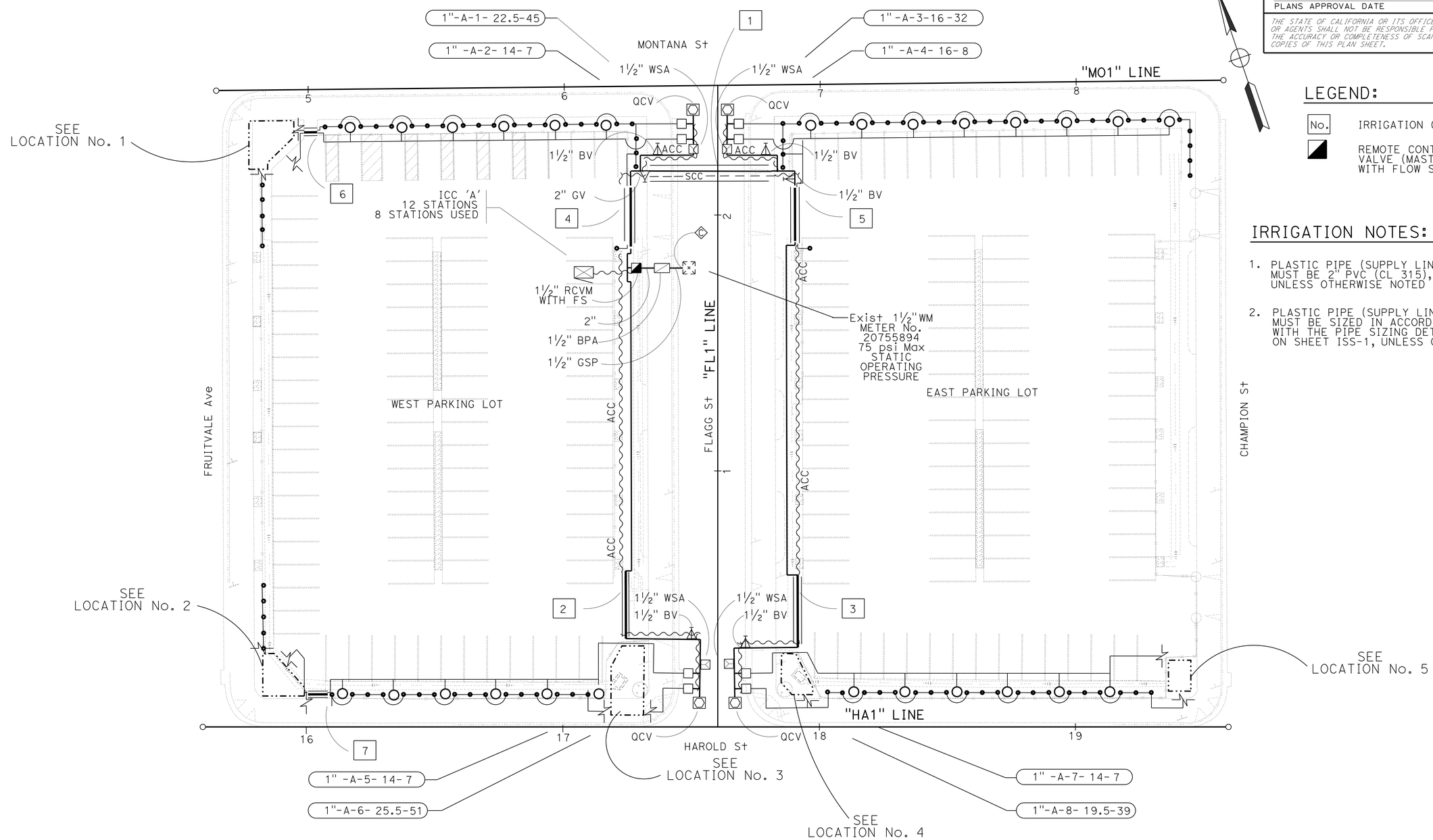

LEGEND:

No.	IRRIGATION CONDUIT
◪	REMOTE CONTROL VALVE (MASTER) WITH FLOW SENSOR

IRRIGATION NOTES:

1. PLASTIC PIPE (SUPPLY LINE) (MAIN) MUST BE 2" PVC (CL 315), UNLESS OTHERWISE NOTED
2. PLASTIC PIPE (SUPPLY LINE) (LATERAL) MUST BE SIZED IN ACCORDANCE WITH THE PIPE SIZING DETAIL ON SHEET ISS-1, UNLESS OTHERWISE NOTED

IRRIGATION PLAN

SCALE: 1" = 20'

APPROVED FOR IRRIGATION WORK ONLY

IP-1

REVISED BY	DATE REVISED
DC	5-26-16

DENNIS CALLOWAY — LYDIA MAC — CALCULATED-DESIGNED BY — CHECKED BY — SENIOR LANDSCAPE ARCHITECT — LYDIA MAC

STATE OF CALIFORNIA - DEPARTMENT OF TRANSPORTATION
Caltrans® LANDSCAPE ARCHITECTURE

LAST REVISION 06-06-16 — DATE PLOTTED => 09-AUG-2016 — TIME PLOTTED => 13:17

Dist	COUNTY	ROUTE	POST MILES TOTAL PROJECT	SHEET No.	TOTAL SHEETS
04	Ala	580	41.5	55	123

LICENSED LANDSCAPE ARCHITECT

6-7-16
PLANS APPROVAL DATE

THE STATE OF CALIFORNIA OR ITS OFFICERS OR AGENTS SHALL NOT BE RESPONSIBLE FOR THE ACCURACY OR COMPLETENESS OF SCANNED COPIES OF THIS PLAN SHEET.

LICENSED LANDSCAPE ARCHITECT
DENNIS CALLOWAY No. 2530
Signature
11-30-17
Renewal Date
5-26-16
Date
STATE OF CALIFORNIA

NOTE:

FOR ACCURATE RIGHT OF WAY DATA, CONTACT RIGHT OF WAY ENGINEERING AT THE DISTRICT OFFICE.

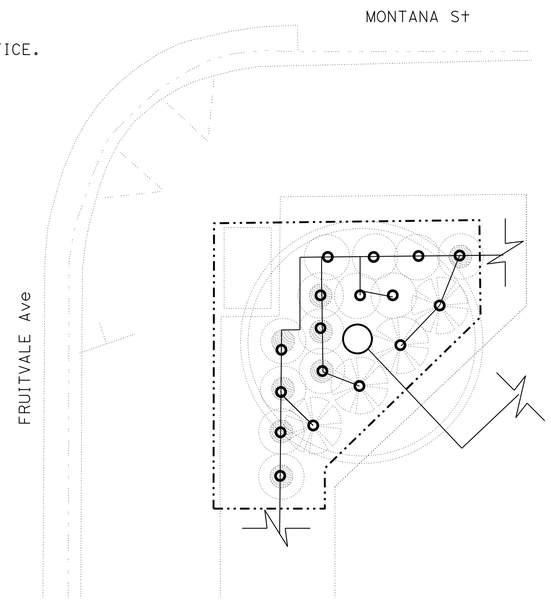

LOCATION No. 1

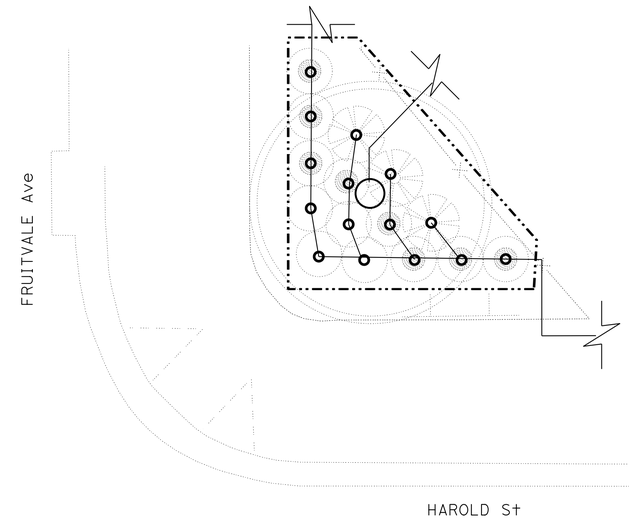

LOCATION No. 2

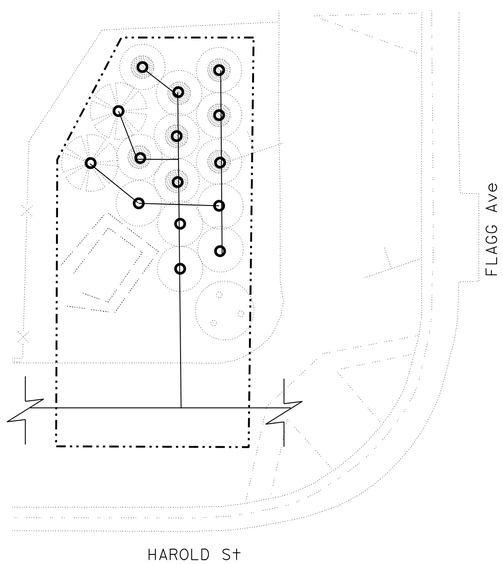

LOCATION No. 3

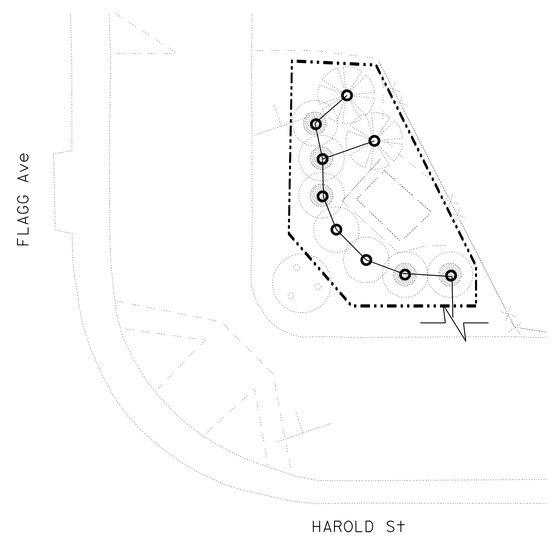

LOCATION No. 4

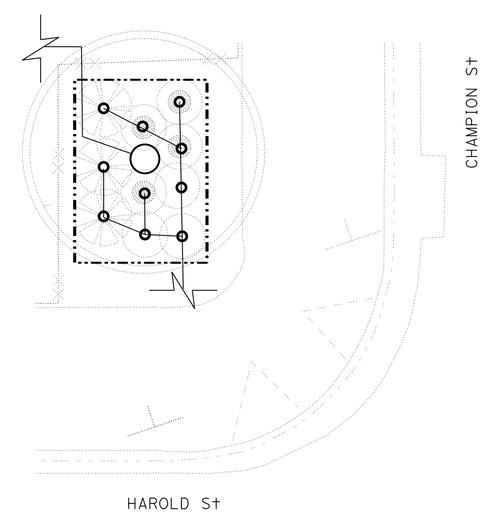

LOCATION No. 5

IRRIGATION PLAN

NO SCALE

APPROVED FOR IRRIGATION WORK ONLY

IP-1

STATE OF CALIFORNIA - DEPARTMENT OF TRANSPORTATION
Caltrans® LANDSCAPE ARCHITECTURE

SENIOR LANDSCAPE ARCHITECT: LYDIA MAC
CALCULATED-DESIGNED BY: DENNIS CALLOWAY
CHECKED BY: LYDIA MAC
REVISED BY: DC
DATE REVISED: 5-26-16

LAST REVISION: 06-06-16
DATE PLOTTED => 09-AUG-2016
TIME PLOTTED => 13:17

Dist	COUNTY	ROUTE	POST MILES TOTAL PROJECT	SHEET No.	TOTAL SHEETS
04	Ala	580	41.5	56	123

LICENSED LANDSCAPE ARCHITECT

6-7-16
PLANS APPROVAL DATE

LICENSED LANDSCAPE ARCHITECT
DENNIS CALLOWAY No. 3597
Signature
11-30-17
Renewal Date
5-26-16
Date
STATE OF CALIFORNIA

THE STATE OF CALIFORNIA OR ITS OFFICERS OR AGENTS SHALL NOT BE RESPONSIBLE FOR THE ACCURACY OR COMPLETENESS OF SCANNED COPIES OF THIS PLAN SHEET.

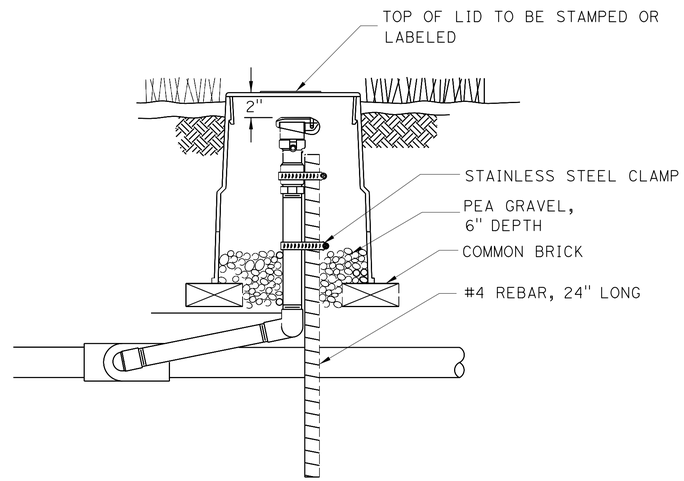

SECTION

QUICK COUPLING VALVE

IRRIGATION DETAILS

NO SCALE

ID-1

DENNIS CALLOWAY	DC
LYDIA MAC	5-26-16
CALCULATED-DESIGNED BY	REVISED BY
CHECKED BY	DATE REVISED
SENIOR LANDSCAPE ARCHITECT	
LYDIA MAC	

STATE OF CALIFORNIA - DEPARTMENT OF TRANSPORTATION
Caltrans®
LANDSCAPE ARCHITECTURE

LAST REVISION 06-06-16
DATE PLOTTED => 09-AUG-2016
TIME PLOTTED => 13:17

Dist	COUNTY	ROUTE	POST MILES TOTAL PROJECT	SHEET No.	TOTAL SHEETS
04	Ala	580	41.5	57	123

Dennis Calloway
LICENSED LANDSCAPE ARCHITECT

6-7-16
PLANS APPROVAL DATE

LICENSED LANDSCAPE ARCHITECT — DENNIS CALLOWAY No. 2539 — Signature — 11-30-17 Renewal Date — 5-26-16 Date — STATE OF CALIFORNIA

THE STATE OF CALIFORNIA OR ITS OFFICERS OR AGENTS SHALL NOT BE RESPONSIBLE FOR THE ACCURACY OR COMPLETENESS OF SCANNED COPIES OF THIS PLAN SHEET.

IRRIGATION QUANTITIES

	CONTROLLER NAME	VALVE NUMBER	SHEET NUMBER	IRRIGATION CONTROLLER 12 STATION	IRRIGATION CONTROLLER -- STATION	IRRIGATION CONTROLLER TWO WIRE	IRRIGATION CONTROLLER CEC (N) SINGLE	IRRIGATION CONTROLLER CEC (N) DOUBLE	WM -- "	VALVES AND ASSEMBLIES BPA 1½"	BPA (N) ENCLOSURE	BPA (N) BLANKET	RCVM 1½"	PRV 2"	RCV 1"	RCV 1½"	RCV 2"	DVA 1"	DVA 1½"	FS 1½"	GV 1½"	GV 2"	GV 3"	BV 1"	BV 1½"	BV 2"	WSA 1"	WSA 1½"	WSA 2"	QCV ¾"	CV 1½"	CV 2"	IRRIGATION SUPPLY LINE GSP (SUPPLY LINE) 1½"	GSP (SUPPLY LINE) 3"	PLASTIC PIPE (SCHEDULE 40) (SUPPLY LINE) ¾"	PLASTIC PIPE (SCHEDULE 40) (SUPPLY LINE) 1"	PLASTIC PIPE (SCHEDULE 40) (SUPPLY LINE) 1¼"	PLASTIC PIPE (SCHEDULE 40) (SUPPLY LINE) 1½"	PLASTIC PIPE (CLASS 315) (SUPPLY LINE) ¾"	PLASTIC PIPE (CLASS 315) (SUPPLY LINE) 1"	PLASTIC PIPE (CLASS 315) (SUPPLY LINE) 2"	DIT ⅝"	SPRINKLER ASSEMBLY RISER GEAR DRIVEN	POP-UP GEAR DRIVEN	RISER BUBBLER	RISER SPRAY	POP-UP	TREE WELL
				EA	EA	EA	EA	EA	EA	EA	EA	EA	EA	EA	EA	EA	EA	EA	EA	EA	EA	EA	EA	EA	EA	EA	EA	EA	EA	EA	EA	EA	EA	LF	LF	LF	LF	LF	LF	LF	LF	LF	EA	EA	EA	EA	EA	EA
SUBTOTALS PER VALVE ON LATERAL SUPPLY SIDE OF CONTROL VALVE	A	1	IP-1																																85	15	130	10	–	–	–	–	–	–	45	–	–	–
		2																																	65	40	40	–	–	–	–	–	–	–	–	–	–	7
		3																																	95	45	50	–	–	–	–	–	–	–	32	–	–	–
		4																																	60	40	50	–	–	–	–	–	–	–	–	–	–	8
		5																																	60	40	40	–	–	–	–	–	–	–	–	–	–	7
		6																																	135	25	85	15	–	–	–	–	–	–	51	–	–	–
		7																																	75	40	30	–	–	–	–	–	–	–	–	–	–	7
		8																																	110	45	60	–	–	–	–	–	–	–	39	–	–	–
SUBTOTALS PER SHEET ON MAIN SUPPLY SIDE OF CONTROL VALVE			IP-1	1	–	–	1	–	–	1	1	1	1	–	8	–	–	–	–	–	–	1	–	–	4	–	–	4	–	4	–	–	10	–	–	–	–	–	–	–	500	–	–	–	–	–	–	–
TOTAL				1	–	–			–	1			1	–	8	–	–	–		–	–	1	–		4		–	4	–	4		–	10	–	685	290	485	25	–	–	500	–	–	–	167		–	29

(N) - NOT A SEPARATE PAY ITEM, FOR INFORMATION ONLY

IRRIGATION QUANTITIES

IQ-1

STATE OF CALIFORNIA - DEPARTMENT OF TRANSPORTATION
Caltrans® LANDSCAPE ARCHITECTURE

SENIOR LANDSCAPE ARCHITECT: LYDIA MAC
CALCULATED-DESIGNED BY: DENNIS CALLOWAY
CHECKED BY: LYDIA MAC
REVISED BY: DC
DATE REVISED: 5-26-16

LAST REVISION 06-06-16
DATE PLOTTED => 09-AUG-2016
TIME PLOTTED => 13:17

Dist	COUNTY	ROUTE	POST MILES TOTAL PROJECT	SHEET No.	TOTAL SHEETS
04	Ala	580	41.5	58	123

LICENSED LANDSCAPE ARCHITECT

6-7-16
PLANS APPROVAL DATE

LICENSED LANDSCAPE ARCHITECT
DENNIS CALLOWAY No. 2530
Signature
11-30-17
Renewal Date
5-26-16
Date
STATE OF CALIFORNIA

THE STATE OF CALIFORNIA OR ITS OFFICERS OR AGENTS SHALL NOT BE RESPONSIBLE FOR THE ACCURACY OR COMPLETENESS OF SCANNED COPIES OF THIS PLAN SHEET.

IRRIGATION CONDUIT

SHEET No.	IRRIGATION CONDUIT No.	LOCATION		SIDE		EXTENSION CONNECTION TYPE		(N) WATER SUPPLY LINE			(N) CNC/ ELECTRICAL CONDUIT	CORRUGATED HIGH DENSITY POLYETHYLENE PIPE	WELDED STEEL PIPE
												CONDUIT SIZE (INCH)	
		LINE	STATION	L†	R†	CB	OL	SIZE (INCH)			SIZE (INCH)	8	8
								¾	1	2		LENGTH (LF)	LENGTH (LF)
IP-1	1	"FL1"	2+21	X	X	-	-	-	-	X	2	-	55
	2	"FL1"	0+30	X	-	-	-	-	-	X	2	30	-
	3	"FL1"	0+30	-	X	-	-	-	-	X	2	30	-
	4	"FL1"	1+90	X	-	-	-	-	-	X	2	30	-
	5	"FL1"	1+90	-	X	-	-	-	-	X	2	30	-
	6	"MO1"	4+98	-	X	-	-	X	X	-	-	6	-
	7	"HA1"	16+00	X	-	-	-	X	X	-	-	6	-
											TOTAL	132	55

(N) - NOT A SEPARATE PAY ITEM, FOR INFORMATION ONLY

X - DENOTES REQUIREMENT

ABBREVIATIONS:

CB - COUPLING BAND
OL - OVERLAP

IRRIGATION QUANTITIES

IQ-2

DENNIS CALLOWAY | REVISED BY | DC
LYDIA MAC | DATE REVISED | 5-26-16
CALCULATED-DESIGNED BY
CHECKED BY
SENIOR LANDSCAPE ARCHITECT
LYDIA MAC

STATE OF CALIFORNIA - DEPARTMENT OF TRANSPORTATION
Caltrans® LANDSCAPE ARCHITECTURE

LAST REVISION 06-06-16 | DATE PLOTTED => 09-AUG-2016 | TIME PLOTTED => 13:17

Dist	COUNTY	ROUTE	POST MILES TOTAL PROJECT	SHEET No.	TOTAL SHEETS
04	Ala	580	41.5	59	123

LICENSED LANDSCAPE ARCHITECT

6-7-16
PLANS APPROVAL DATE

LICENSED LANDSCAPE ARCHITECT
DENNIS CALLOWAY No. 2524
Signature
11-30-17
Renewal Date
5-26-16
Date
STATE OF CALIFORNIA

THE STATE OF CALIFORNIA OR ITS OFFICERS OR AGENTS SHALL NOT BE RESPONSIBLE FOR THE ACCURACY OR COMPLETENESS OF SCANNED COPIES OF THIS PLAN SHEET.

PLANTING LEGEND

PLANT GROUP	PLANT No.	SYMBOL	BOTANICAL NAME	COMMON NAME	SIZE	QUANTITY EACH	HOLE SIZE (INCH) Dia	HOLE SIZE (INCH) DEPTH	BASIN TYPE	SOIL AMENDMENT (1) TYPE	SOIL AMENDMENT (1) RATE	IRON SULFATE (1) RATE	FERTILIZER (1) PLANTING	FERTILIZER (1) PLT ESTB	BASIN MULCH TYPE	BASIN MULCH CY	STAKING	PLANTING LIMITS MINIMUM DISTANCE (ft) FROM ETW	Pvmt	FENCE	WALL	PAVED DITCH	EARTH DITCH	ON CENTER (ft)	REMARKS
B	1		AGAPANTHUS AFRICANUS 'STORM CLOUD'	LIY OF THE NILE	No. 5	19	24	18	I	C	0.5 CF	-	0.2 LB	0.2 LB	WC	0.03	-	-	4	-	-	-	-	3	SHRUB
	2		DIETES BICOLOR	FORTNIGHT LILY	No. 5	33	24	18	I	C	0.5 CF	-	0.2 LB	0.2 LB	WC	0.03	-	-	4	4	-	-	-	3	SHRUB
	3		PHORMIUM 'FIREBIRD'	NEW ZEALAND FLAX 'FIREBIRD'	No. 5	14	24	18	I	C	0.5 CF	-	0.2 LB	0.2 LB	WC	0.03	-	-	7	3	-	-	-	4	SHRUB
	4		RHAPHIOLEPIS INDICA 'BALLERINA'	INDIAN HAWTHORNE 'BALLERINA'	No. 5	99	24	18	I	C	0.5 CF	-	0.2 LB	0.2 LB	WC	0.03	-	-	1.875	-	-	1.875	-	6	SHRUB
U	5		LAGERSTROEMIA INDICA 'MUSKOGEE'	CRAPE MYRTLE 'MUSKOGEE'	No. 15	3	30	36	I	C	1 CF	-	0.5 LB	0.5 LB	WC	0.03	(4)	-	-	-	-	-	-	(7)	TREE
	6		PODOCARPUS GRACILLIOR	FERN PINE	No. 15	12	30	36	I	C	1 CF	-	0.5 LB	0.5 LB	WC	0.03	(4)	-	1.875	-	-	1.875	-	20	TREE
	7		TRISTANIOPSIS LAURINA 'ELEGANT'	WATER GUM 'ELEGANT'	No. 15	14	30	36	I	C	1 CF	-	0.5 LB	0.5 LB	WC	0.03	(4)	-	2.65	-	-	-	-	20	TREE

APPLICABLE WHEN CIRCLED:

(1) - QUANTITIES SHOWN ARE "PER PLANT" UNLESS SHOWN AS SQFT OR SQYD APPLICATION RATES
2 - BASIN MULCH IN WOOD MULCH AREAS IS INCLUDED WITH MULCH AREA QUANTITIES SHOWN ON PLANTING PLAN
3 - SUFFICIENT TO RECEIVE ROOT BALL AND AMENDMENTS IF REQUIRED
(4) - SEE DETAIL
5 - SEE SPECIAL PROVISIONS
6 - SEE STANDARD SPECIFICATIONS
(7) - AS SHOWN ON PLANS
8 - UNLESS OTHERWISE SHOWN ON PLANS
9 - FOLIAGE PROTECTOR REQUIRED
10 - ROOT PROTECTOR REQUIRED
11 - ROOT BARRIER REQUIRED
12 - DEPARTMENT-FURNISHED

ABBREVIATIONS:

C - COMPOST
N - NITROLIZED FIR BARK
P - PERLITE
S - SPHAGNUM PEAT MOSS
SB - SHREDDED BARK
TB - TREE BARK
TT - TREE TRIMMING
V - VERMICULITE
WC - WOOD CHIP

NOTE:

UNDERLINED PORTIONS OF BOTANICAL NAME INDICATE ABBREVIATIONS USED ON PLANTING PLANS.

PLANT LEGEND

PL-1

REVISED BY: DC — DATE REVISED: 5-26-16
DENNIS CALLOWAY — LYDIA MAC
CALCULATED-DESIGNED BY — CHECKED BY
SENIOR LANDSCAPE ARCHITECT — LYDIA MAC
STATE OF CALIFORNIA - DEPARTMENT OF TRANSPORTATION
Caltrans LANDSCAPE ARCHITECTURE

LAST REVISION 06-06-16 | DATE PLOTTED => 09-AUG-2016 | TIME PLOTTED => 13:17

Dist	COUNTY	ROUTE	POST MILES TOTAL PROJECT	SHEET No.	TOTAL SHEETS
04	Ala	580	41.5	60	123

LICENSED LANDSCAPE ARCHITECT

6-7-16
PLANS APPROVAL DATE

LICENSED LANDSCAPE ARCHITECT
DENNIS CALLOWAY No. 2530
Signature
11-30-17
Renewal Date
5-26-16
Date
STATE OF CALIFORNIA

THE STATE OF CALIFORNIA OR ITS OFFICERS OR AGENTS SHALL NOT BE RESPONSIBLE FOR THE ACCURACY OR COMPLETENESS OF SCANNED COPIES OF THIS PLAN SHEET.

NOTE:

FOR ACCURATE RIGHT OF WAY DATA, CONTACT RIGHT OF WAY ENGINEERING AT THE DISTRICT OFFICE.

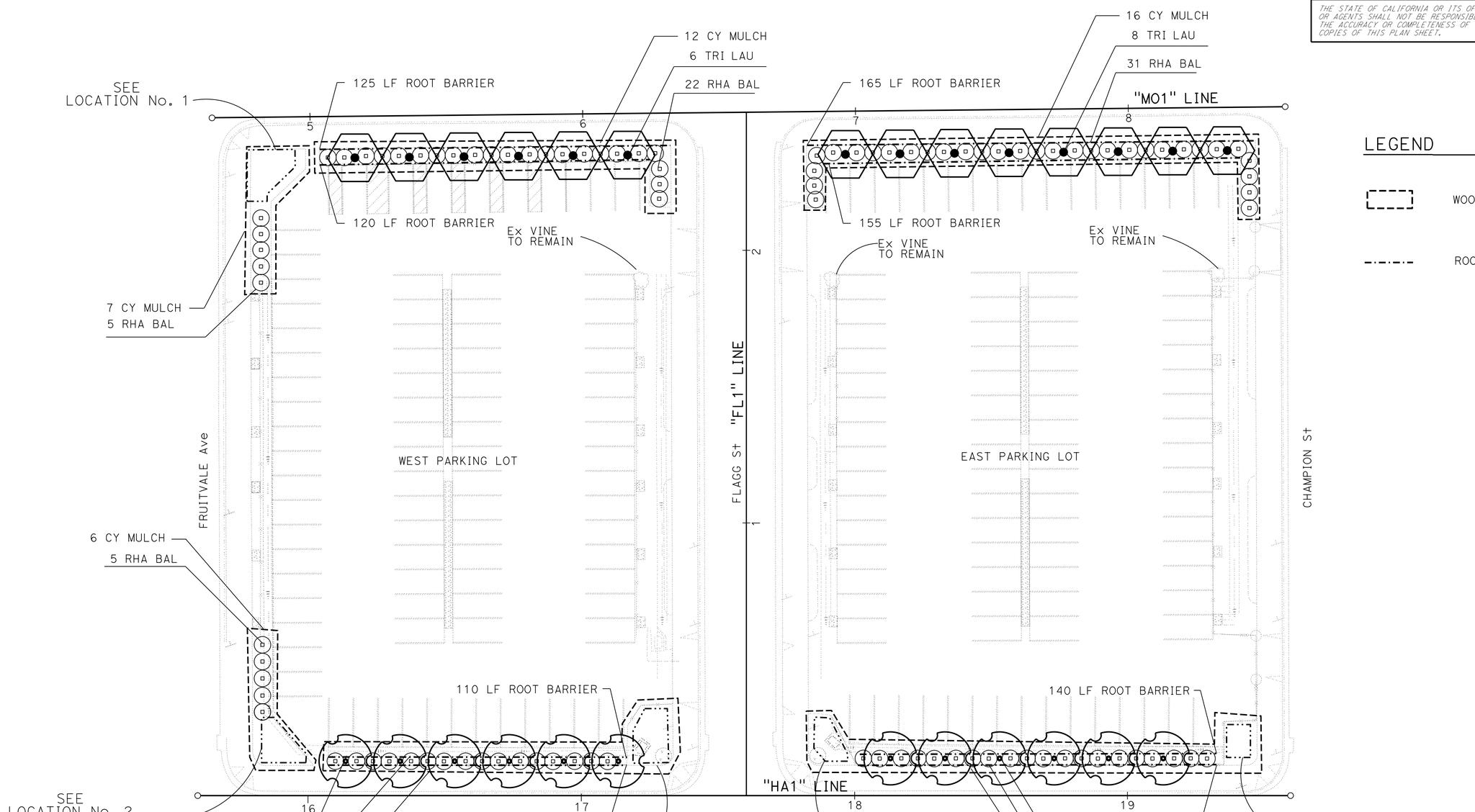

LEGEND

WOOD MULCH AREA

ROOT BARRIER

PLANTING PLAN

SCALE: 1" = 20'

APPROVED FOR PLANTING WORK ONLY

PP-1

REVISED BY	DC
DATE REVISED	5-26-16
CALCULATED-DESIGNED BY	DENNIS CALLOWAY
CHECKED BY	LYDIA MAC
SENIOR LANDSCAPE ARCHITECT	LYDIA MAC

STATE OF CALIFORNIA - DEPARTMENT OF TRANSPORTATION
Caltrans® LANDSCAPE ARCHITECTURE

LAST REVISION 06-06-16 | DATE PLOTTED => 09-AUG-2016 | TIME PLOTTED => 13:17

Dist	COUNTY	ROUTE	POST MILES TOTAL PROJECT	SHEET No.	TOTAL SHEETS
04	Ala	580	41.5	61	123

LICENSED LANDSCAPE ARCHITECT

6-7-16
PLANS APPROVAL DATE

LICENSED LANDSCAPE ARCHITECT
DENNIS CALLOWAY No.2530
Signature
11-30-17
Renewal Date
5-26-16
Date
STATE OF CALIFORNIA

THE STATE OF CALIFORNIA OR ITS OFFICERS OR AGENTS SHALL NOT BE RESPONSIBLE FOR THE ACCURACY OR COMPLETENESS OF SCANNED COPIES OF THIS PLAN SHEET.

NOTE:

FOR ACCURATE RIGHT OF WAY DATA, CONTACT RIGHT OF WAY ENGINEERING AT THE DISTRICT OFFICE.

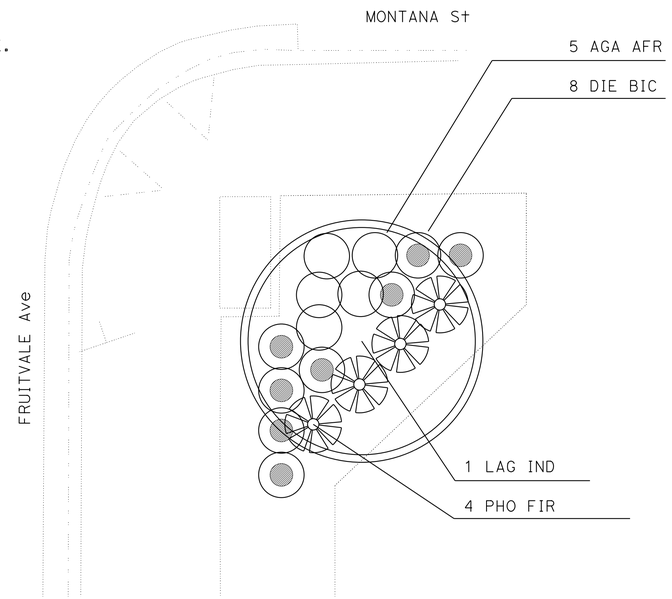

LOCATION No. 1

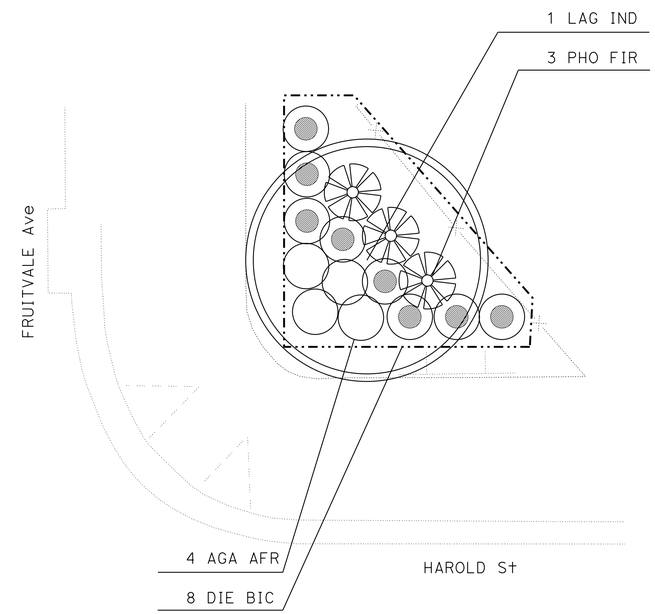

LOCATION No. 2

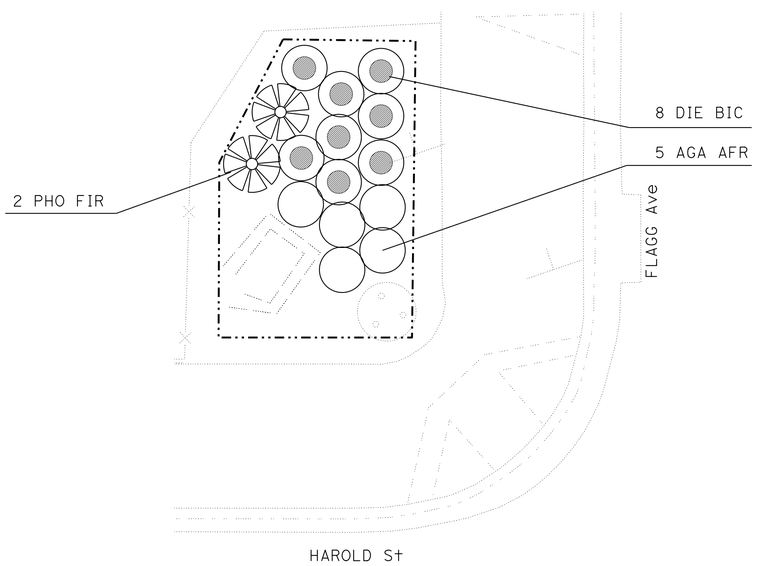

LOCATION No. 3

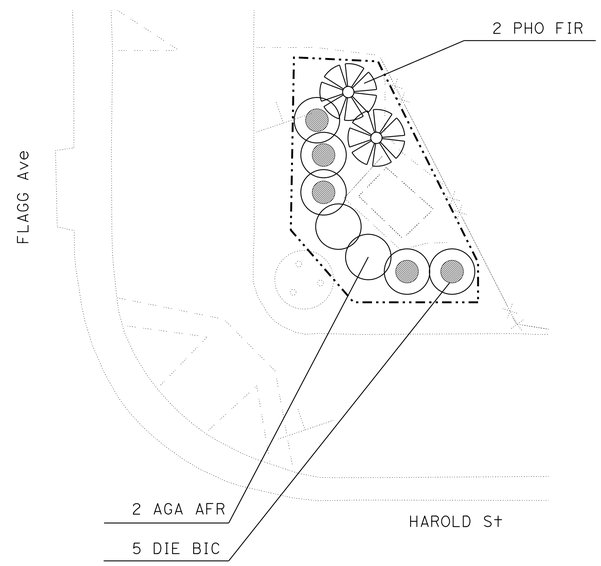

LOCATION No. 4

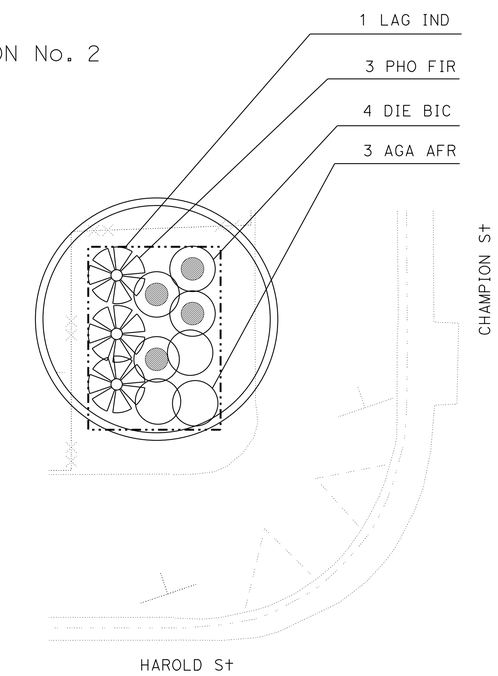

LOCATION No. 5

PLANTING PLAN

NO SCALE

APPROVED FOR PLANTING WORK ONLY

PP-2

DENNIS CALLOWAY	DC
REVISED BY	DATE REVISED
LYDIA MAC	5-26-16
CALCULATED-DESIGNED BY	
CHECKED BY	
SENIOR LANDSCAPE ARCHITECT	
LYDIA MAC	

STATE OF CALIFORNIA - DEPARTMENT OF TRANSPORTATION
Caltrans® LANDSCAPE ARCHITECTURE

LAST REVISION 06-06-16 | DATE PLOTTED => 09-AUG-2016 | TIME PLOTTED => 13:17

Dist	COUNTY	ROUTE	POST MILES TOTAL PROJECT	SHEET No.	TOTAL SHEETS
04	Ala	580	41.5	62	123

LICENSED LANDSCAPE ARCHITECT

6-7-16
PLANS APPROVAL DATE

LICENSED LANDSCAPE ARCHITECT
DENNIS CALLOWAY No.2530
Signature
11-30-17
Renewal Date
5-26-16
Date
STATE OF CALIFORNIA

THE STATE OF CALIFORNIA OR ITS OFFICERS OR AGENTS SHALL NOT BE RESPONSIBLE FOR THE ACCURACY OR COMPLETENESS OF SCANNED COPIES OF THIS PLAN SHEET.

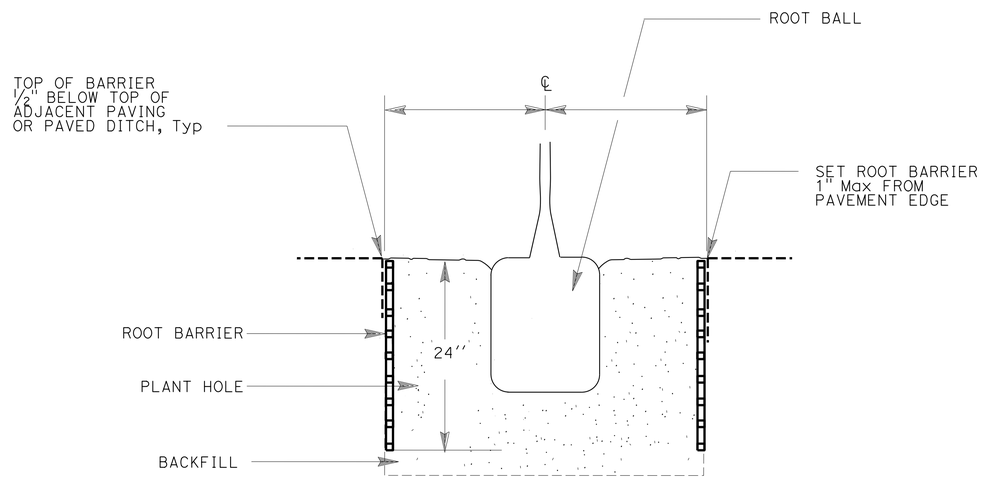

SECTION

ROOT BARRIER

LANDSCAPE DETAILS

NO SCALE

LD-1

CALCULATED-DESIGNED BY	DENNIS CALLOWAY
CHECKED BY	LYDIA MAC
REVISED BY	DC
DATE REVISED	5-26-16
SENIOR LANDSCAPE ARCHITECT	LYDIA MAC

STATE OF CALIFORNIA - DEPARTMENT OF TRANSPORTATION
Caltrans® LANDSCAPE ARCHITECTURE

LAST REVISION 06-06-16 | DATE PLOTTED => 09-AUG-2016 | TIME PLOTTED => 13:17

Dist	COUNTY	ROUTE	POST MILES TOTAL PROJECT	SHEET No.	TOTAL SHEETS
04	Ala	580	41.5	63	123

LICENSED LANDSCAPE ARCHITECT

6-7-16
PLANS APPROVAL DATE

LICENSED LANDSCAPE ARCHITECT
DENNIS CALLOWAY No. 2530
Signature
11-30-17
Renewal Date
5-26-16
Date
STATE OF CALIFORNIA

THE STATE OF CALIFORNIA OR ITS OFFICERS OR AGENTS SHALL NOT BE RESPONSIBLE FOR THE ACCURACY OR COMPLETENESS OF SCANNED COPIES OF THIS PLAN SHEET.

ROOT BARRIER

SHEET No.	STATION	Loc	ROOT BARRIER LF
PP-1	"HA1" 16+06 TO 17+16	L†	110
	"HA1" 16+06 TO 17+16	L†	110
	"HA1" 17+98 TO 19+38	L†	140
	"HA1" 17+98 TO 19+38	L†	140
	"MO1" 5+05 TO 6+25	R†	120
	"MO1" 5+05 TO 6+30	R†	125
	"MO1" 6+87 TO 8+42	R†	155
	"MO1" 6+82 TO 8+47	R†	165
TOTAL			1065

WOOD MULCH

SHEET No.	TYPE	① BASIN	② AREA	SUBTOTAL PER SHEET
		CY		
PP-1	WC	-	73	73
TOTAL				73

①- QUANTITIES SHOWN ARE TOTAL "PER PLANT" OUTSIDE OF MULCH AREAS

②- BASIN MULCH WITHIN MULCH AREAS IS INCLUDED WITH MULCH AREA QUANTITIES SHOWN ON PLANTING PLAN

MULCH TYPES:

C - COMPOST
N - NITROLIZED FIR BARK
SB - SHREDDED BARK
TB - TREE BARK
TT - TREE TRIMMING
WC - WOOD CHIP

PLANT QUANTITIES

TYPE	QUANTITY		IRON SULFATE	SOIL AMENDMENT	COMMERCIAL FERTILIZER		STAKES (N)	FOLIAGE PROTECTOR	ROOT PROTECTOR
					PACKET	SLOW RELEASE			
	EA		LB	CY	EA	LB	EA	EA	EA
PLANT (GROUP B)	165	-	-	3.1	-	33	-	-	-
PLANT (GROUP U)	-	29	-	1.1	-	14.5	58	-	-
TOTAL	165	29	-	4.2	-	47.5	58	-	-

(N) - NOT A SEPARATE PAY ITEM, FOR INFORMATION ONLY

LANDSCAPE QUANTITIES

LQ-1

STATE OF CALIFORNIA - DEPARTMENT OF TRANSPORTATION
Caltrans® LANDSCAPE ARCHITECTURE

SENIOR LANDSCAPE ARCHITECT: LYDIA MAC
CALCULATED-DESIGNED BY: DENNIS CALLOWAY
CHECKED BY: LYDIA MAC
REVISED BY: DC
DATE REVISED: 5-26-16

LAST REVISION 06-06-16
DATE PLOTTED => 09-AUG-2016
TIME PLOTTED => 13:17

Dist	COUNTY	ROUTE	POST MILES TOTAL PROJECT	SHEET No.	TOTAL SHEETS
04	Ala	580	41.5	64	123

REGISTERED ELECTRICAL ENGINEER 6-1-16 DATE

6-7-16
PLANS APPROVAL DATE

REGISTERED PROFESSIONAL ENGINEER Mahmood Noii No. 13717 Exp. 6-30-17 ELECTRICAL STATE OF CALIFORNIA

THE STATE OF CALIFORNIA OR ITS OFFICERS OR AGENTS SHALL NOT BE RESPONSIBLE FOR THE ACCURACY OR COMPLETENESS OF SCANNED COPIES OF THIS PLAN SHEET.

ELECTRICAL INDEX:

E-1	ELECTRICAL INDEX, NOTES, LEGEND AND ABBREVIATIONS
E-2 TO E-3	MAINTAINING EXISTING ELECTRICAL SYSTEM
E-4 TO E-6	SIGNAL AND LIGHTING (CITY)
E-7	ELECTRIC SERVICE FOR IRRIGATION
E-8 TO E-13	ELECTRICAL DETAILS
E-14	ELECTRICAL QUANTITIES

NOTES:

1. DO NOT PERFORM ABOVE GROUND ELECTRICAL WORK ON ANY SYSTEM WITHIN THE PROJECT SITE UNTIL ALL CONTRACTOR-FURNISHED ELECTRICAL MATERIALS FOR THAT INDIVIDUAL SYSTEM HAVE BEEN TESTED AND DELIVERED.
2. AFTER COMPLETION OF WORK ON THE CITY OF OAKLAND'S ELECTRICAL SYSTEM, THE CONTRACTOR SHALL CONTACT THE CITY'S SUPERVISING TRANSPORTATION ENGINEER TO MAKE A FINAL INSPECTION.
3. THE NEW CITY LIGHTING STANDARDS SHALL BE INSTALLED AND OPERATIONAL BEFORE THE EXISTING CITY LIGHTING STANDARDS ARE REMOVED.
4. PULL BOX COVERS MUST HAVE THE MARKING "CALTRANS" UNLESS OTHERWISE NOTED.
5. INSTALL A MINIMUM No. 8, BARE GROUNDING COPPER CONDUCTOR IN CONDUIT AND CONNECT IT TO ALL METAL COMPONENTS.

ABBREVIATIONS:

CEC	CONTROLLER ENCLOSURE CABINET
CT	CALTRANS
PG&E	PACIFIC GAS AND ELECTRIC

LEGEND: (SEE ALSO RSP ES-1A, RSP ES-1B AND RSP ES-1C)

PROPOSED	EXISTING	
	PGE	PG&E PULL BOX
	U	PG&E VAULT
CEC	CEC	IRRIGATION CONTROLLER ENCLOSURE CABINET

LEGEND:

1	RC	EXISTING PULL BOX, INSTALL NEW No. 5 (T) PULL BOX IN PLACE.
2	RS	EXISTING PBA. INSTALL ONE APS ASSEMBLY. SEE RSP ES-5C FOR DETAILS.
3	RS	EXISTING PBA. INSTALL TWO APS ASSEMBLIES. SEE RSP ES-5C FOR DETAILS.
4	RS	EXISTING PEDESTRIAN SIGNAL FACE MODULE. INSTALL ONE LED COUNTDOWN PEDESTRIAN SIGNAL FACE MODULE INTO EXISTING PEDESTRIAN SIGNAL HOUSING. SEE RSP ES-4B FOR DETAILS.
5	RS	EXISTING PEDESTRIAN SIGNAL FACE MODULES. INSTALL TWO LED COUNTDOWN PEDESTRIAN SIGNAL FACE MODULES INTO EXISTING PEDESTRIAN SIGNAL HOUSING. SEE RSP ES-4B FOR DETAILS.
6		INSTALL ONE APS ASSEMBLY. SEE RSP ES-5C FOR DETAILS.
7		INSTALL TWO APS ASSEMBLIES. SEE RSP ES-5C FOR DETAILS.
8	RS	EXISTING LIGHTING STANDARD.
	RR	EXISTING LED LUMINAIRE. INSTALL ON NEW LIGHTING STANDARD.
9		INSTALL NEW LIGHTING STANDARD. SEE POLE AND INSTALLATION DETAILS ON SHEETS E-8 AND E-13. INSTALL LED LUMINAIRE FROM EXISTING LIGHTING STANDARD.
10	RS	EXISTING AUDIBLE PEDESTRIAN SIGNAL(S). INSTALL ½" PLUG(S) INTO NOW UNUSED HOLE(S).

ELECTRICAL INDEX, NOTES, LEGEND AND ABBREVIATIONS

E-1

REVISED BY	DATE REVISED
PL	6-1-16

PIERRE LASSALLE — MAHMOOD NOII — CALCULATED-DESIGNED BY — CHECKED BY

FUNCTIONAL SUPERVISOR: BEHZAD GOLEMOHAMMADI

STATE OF CALIFORNIA - DEPARTMENT OF TRANSPORTATION — Caltrans — ELECTRICAL

LAST REVISION 05-19-16 — DATE PLOTTED => 09-AUG-2016 — TIME PLOTTED => 13:17

Dist	COUNTY	ROUTE	POST MILES TOTAL PROJECT	SHEET No.	TOTAL SHEETS
04	Ala	580	41.5	65	123

REGISTERED ELECTRICAL ENGINEER 6-1-16 DATE

6-7-16
PLANS APPROVAL DATE

REGISTERED PROFESSIONAL ENGINEER Mahmood Noii No. 13717 Exp. 6-30-17 ELECTRICAL STATE OF CALIFORNIA

THE STATE OF CALIFORNIA OR ITS OFFICERS OR AGENTS SHALL NOT BE RESPONSIBLE FOR THE ACCURACY OR COMPLETENESS OF SCANNED COPIES OF THIS PLAN SHEET.

NOTE:

FOR ACCURATE RIGHT OF WAY DATA, CONTACT RIGHT OF WAY ENGINEERING AT THE DISTRICT OFFICE.

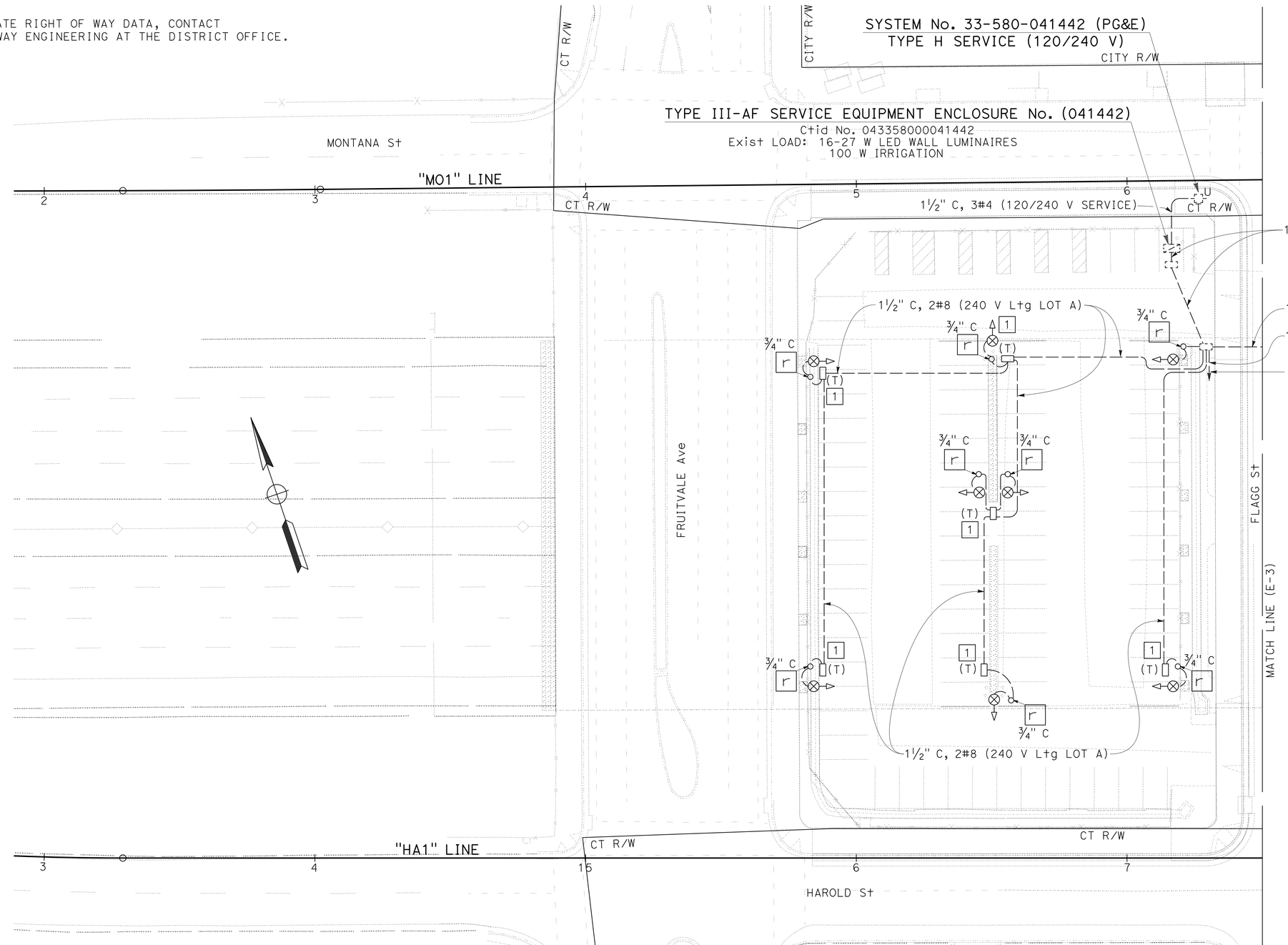

LIGHTING (PARK AND RIDE)

APPROVED FOR ELECTRICAL WORK ONLY

FOR NOTES, ABBREVIATIONS AND LEGEND, SEE SHEET E-1

MAINTAINING EXISTING ELECTRICAL SYSTEM

SCALE: 1" = 20'

E-2

STATE OF CALIFORNIA - DEPARTMENT OF TRANSPORTATION
Caltrans
ELECTRICAL

FUNCTIONAL SUPERVISOR: BEHZAD GOLEMOHAMMADI
CALCULATED-DESIGNED BY: PIERRE LASSALLE
CHECKED BY: MAHMOOD NOII
REVISED BY: PL
DATE REVISED: 6-1-16

LAST REVISION 05-02-16 | DATE PLOTTED => 09-AUG-2016 | TIME PLOTTED => 13:18

BORDER LAST REVISED 7/2/2010 | USERNAME => s126849 | DGN FILE => 0413000123ua002.dgn | RELATIVE BORDER SCALE IS IN INCHES 0 1 2 3 | UNIT 0746 | PROJECT NUMBER & PHASE 04130001231

Dist	COUNTY	ROUTE	POST MILES TOTAL PROJECT	SHEET No.	TOTAL SHEETS
04	Ala	580	41.5	66	123

REGISTERED ELECTRICAL ENGINEER 6-1-16 DATE

6-7-16
PLANS APPROVAL DATE

REGISTERED PROFESSIONAL ENGINEER
Mahmood Noii
No. 13717
Exp. 6-30-17
ELECTRICAL
STATE OF CALIFORNIA

THE STATE OF CALIFORNIA OR ITS OFFICERS OR AGENTS SHALL NOT BE RESPONSIBLE FOR THE ACCURACY OR COMPLETENESS OF SCANNED COPIES OF THIS PLAN SHEET.

NOTE:

FOR ACCURATE RIGHT OF WAY DATA, CONTACT RIGHT OF WAY ENGINEERING AT THE DISTRICT OFFICE.

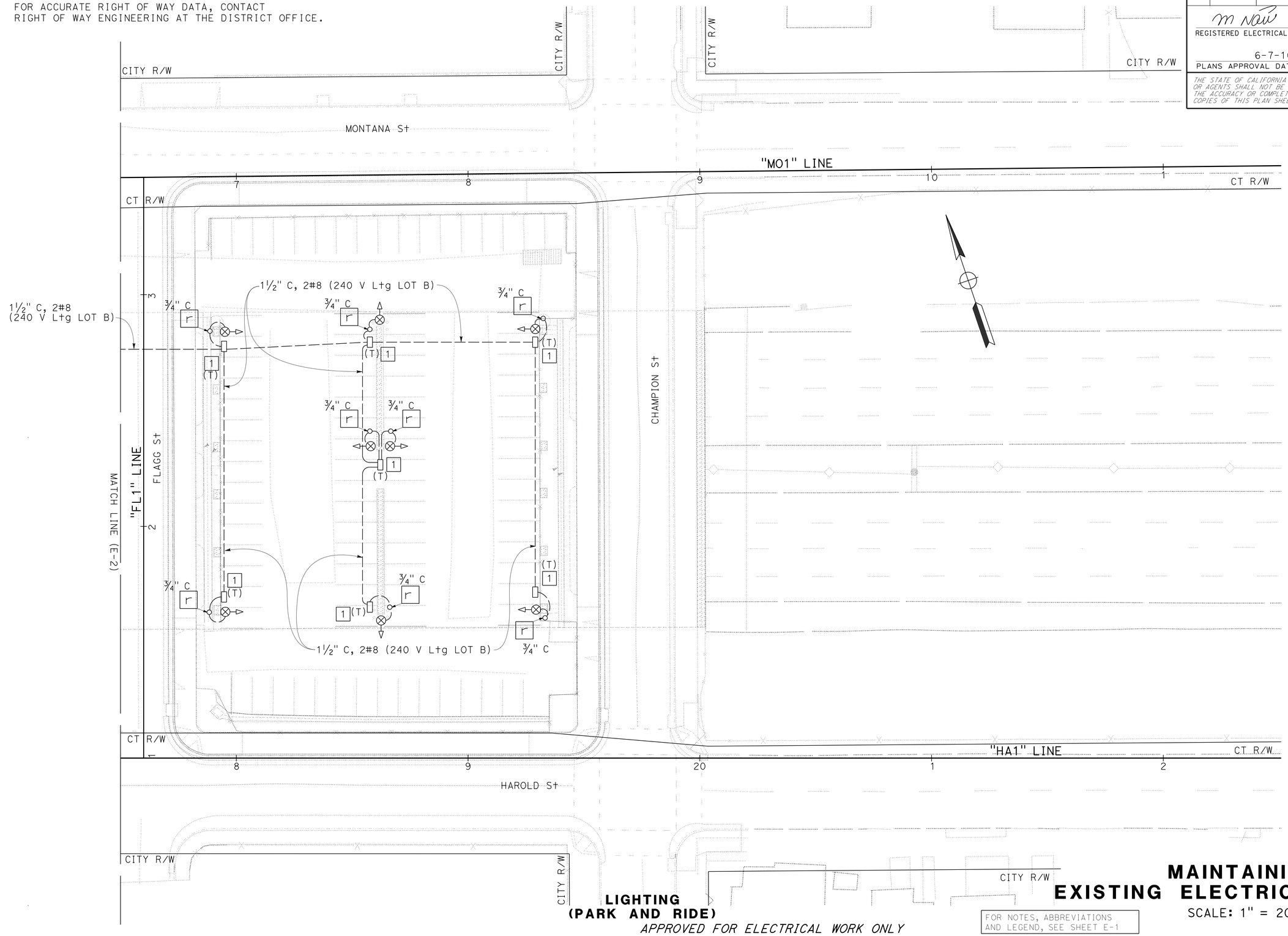

LIGHTING (PARK AND RIDE)

APPROVED FOR ELECTRICAL WORK ONLY

FOR NOTES, ABBREVIATIONS AND LEGEND, SEE SHEET E-1

MAINTAINING EXISTING ELECTRICAL SYSTEM

SCALE: 1" = 20'

E-3

PL	6-1-16
REVISED BY	DATE REVISED
PIERRE LASSALLE	MAHMOOD NOII
CALCULATED-DESIGNED BY	CHECKED BY
FUNCTIONAL SUPERVISOR	BEHZAD GOLEMOHAMMADI

STATE OF CALIFORNIA - DEPARTMENT OF TRANSPORTATION
Caltrans
ELECTRICAL

LAST REVISION 05-02-16 | DATE PLOTTED => 09-AUG-2016 | TIME PLOTTED => 13:18

Dist	COUNTY	ROUTE	POST MILES TOTAL PROJECT	SHEET No.	TOTAL SHEETS
04	Ala	580	41.5	67	123

REGISTERED ELECTRICAL ENGINEER 6-1-16 DATE

PLANS APPROVAL DATE

REGISTERED PROFESSIONAL ENGINEER Mahmood Noii No. 13717 Exp. 6-30-17 ELECTRICAL STATE OF CALIFORNIA

THE STATE OF CALIFORNIA OR ITS OFFICERS OR AGENTS SHALL NOT BE RESPONSIBLE FOR THE ACCURACY OR COMPLETENESS OF SCANNED COPIES OF THIS PLAN SHEET.

NOTE:

FOR ACCURATE RIGHT OF WAY DATA, CONTACT RIGHT OF WAY ENGINEERING AT THE DISTRICT OFFICE.

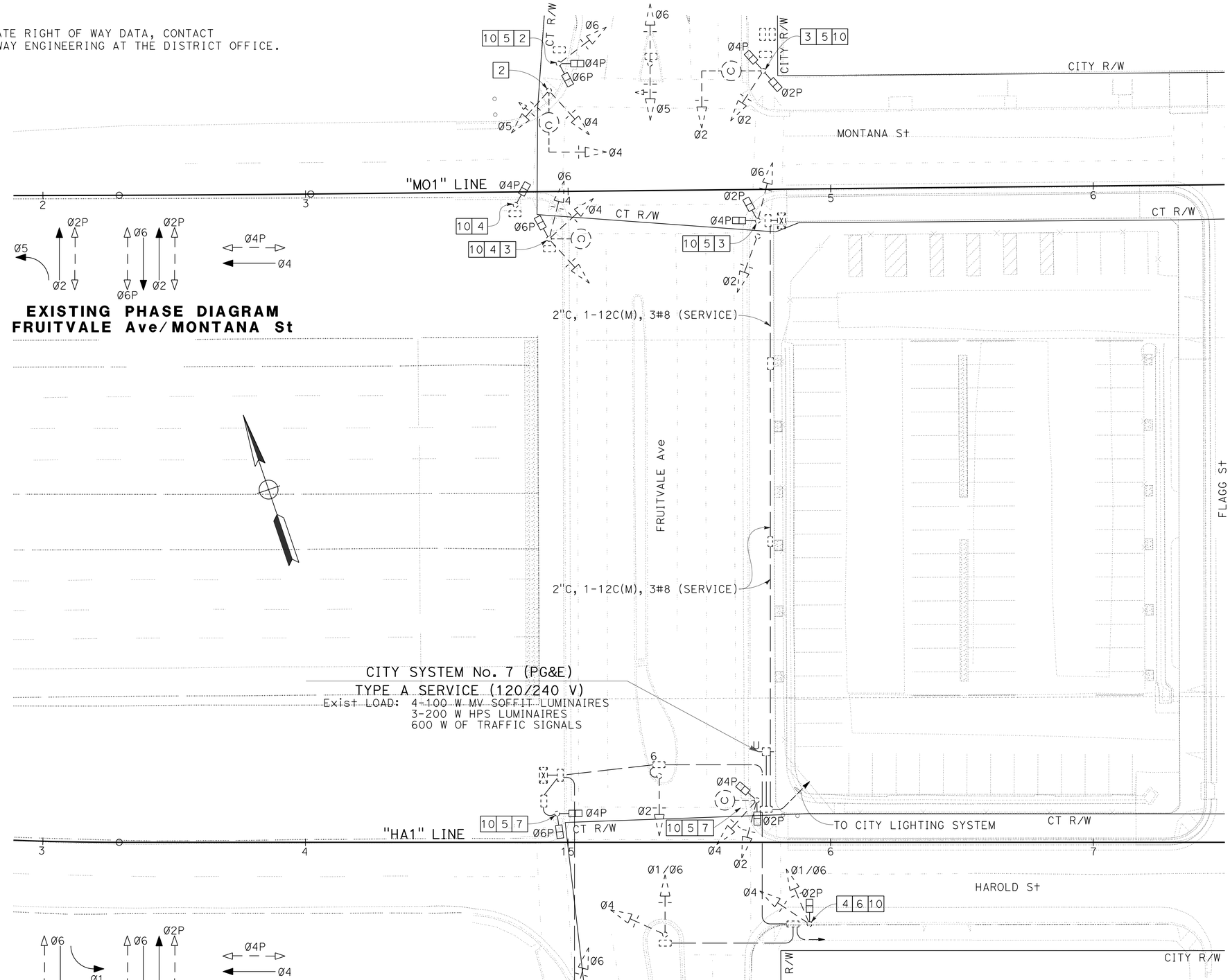

EXISTING PHASE DIAGRAM
FRUITVALE Ave/MONTANA St

EXISTING PHASE DIAGRAM
FRUITVALE Ave/HAROLD St

SIGNAL (CITY)

APPROVED FOR ELECTRICAL WORK ONLY

FOR NOTES, ABBREVIATIONS AND LEGEND, SEE SHEET E-1

SIGNAL AND LIGHTING (CITY)

SCALE: 1" = 20'

E-4

STATE OF CALIFORNIA - DEPARTMENT OF TRANSPORTATION
Caltrans
ELECTRICAL

FUNCTIONAL SUPERVISOR: BEHZAD GOLEMOHAMMADI

CALCULATED-DESIGNED BY: PIERRE LASSALLE
CHECKED BY: MAHMOOD NOII

REVISED BY: PL
DATE REVISED: 6-1-16

LAST REVISION: 05-19-16
DATE PLOTTED => 09-AUG-2016
TIME PLOTTED => 13:18

Dist	COUNTY	ROUTE	POST MILES TOTAL PROJECT	SHEET No.	TOTAL SHEETS
04	Ala	580	41.5	68	123

REGISTERED ELECTRICAL ENGINEER 6-1-16 DATE

6-7-16
PLANS APPROVAL DATE

REGISTERED PROFESSIONAL ENGINEER Mahmood Noii No. 13717 Exp. 6-30-17 ELECTRICAL STATE OF CALIFORNIA

THE STATE OF CALIFORNIA OR ITS OFFICERS OR AGENTS SHALL NOT BE RESPONSIBLE FOR THE ACCURACY OR COMPLETENESS OF SCANNED COPIES OF THIS PLAN SHEET.

NOTE:

FOR ACCURATE RIGHT OF WAY DATA, CONTACT RIGHT OF WAY ENGINEERING AT THE DISTRICT OFFICE.

LIGHTING (CITY)

APPROVED FOR ELECTRICAL WORK ONLY

FOR NOTES, ABBREVIATIONS AND LEGEND, SEE SHEET E-1

SIGNAL AND LIGHTING (CITY)

SCALE: 1" = 20'

E-5

REVISED BY	DATE REVISED
PL	6-1-16

PIERRE LASSALLE — CALCULATED-DESIGNED BY
MAHMOOD NOII — CHECKED BY
FUNCTIONAL SUPERVISOR: BEHZAD GOLEMOHAMMADI

STATE OF CALIFORNIA - DEPARTMENT OF TRANSPORTATION
Caltrans
ELECTRICAL

LAST REVISION 05-19-16 | DATE PLOTTED => 09-AUG-2016 | TIME PLOTTED => 13:18

Dist	COUNTY	ROUTE	POST MILES TOTAL PROJECT	SHEET No.	TOTAL SHEETS
04	Ala	580	41.5	69	123

REGISTERED ELECTRICAL ENGINEER 6-1-16 DATE

6-7-16
PLANS APPROVAL DATE

REGISTERED PROFESSIONAL ENGINEER Mahmood Noii No. 13717 Exp. 6-30-17 ELECTRICAL STATE OF CALIFORNIA

THE STATE OF CALIFORNIA OR ITS OFFICERS OR AGENTS SHALL NOT BE RESPONSIBLE FOR THE ACCURACY OR COMPLETENESS OF SCANNED COPIES OF THIS PLAN SHEET.

NOTE:

FOR ACCURATE RIGHT OF WAY DATA, CONTACT RIGHT OF WAY ENGINEERING AT THE DISTRICT OFFICE.

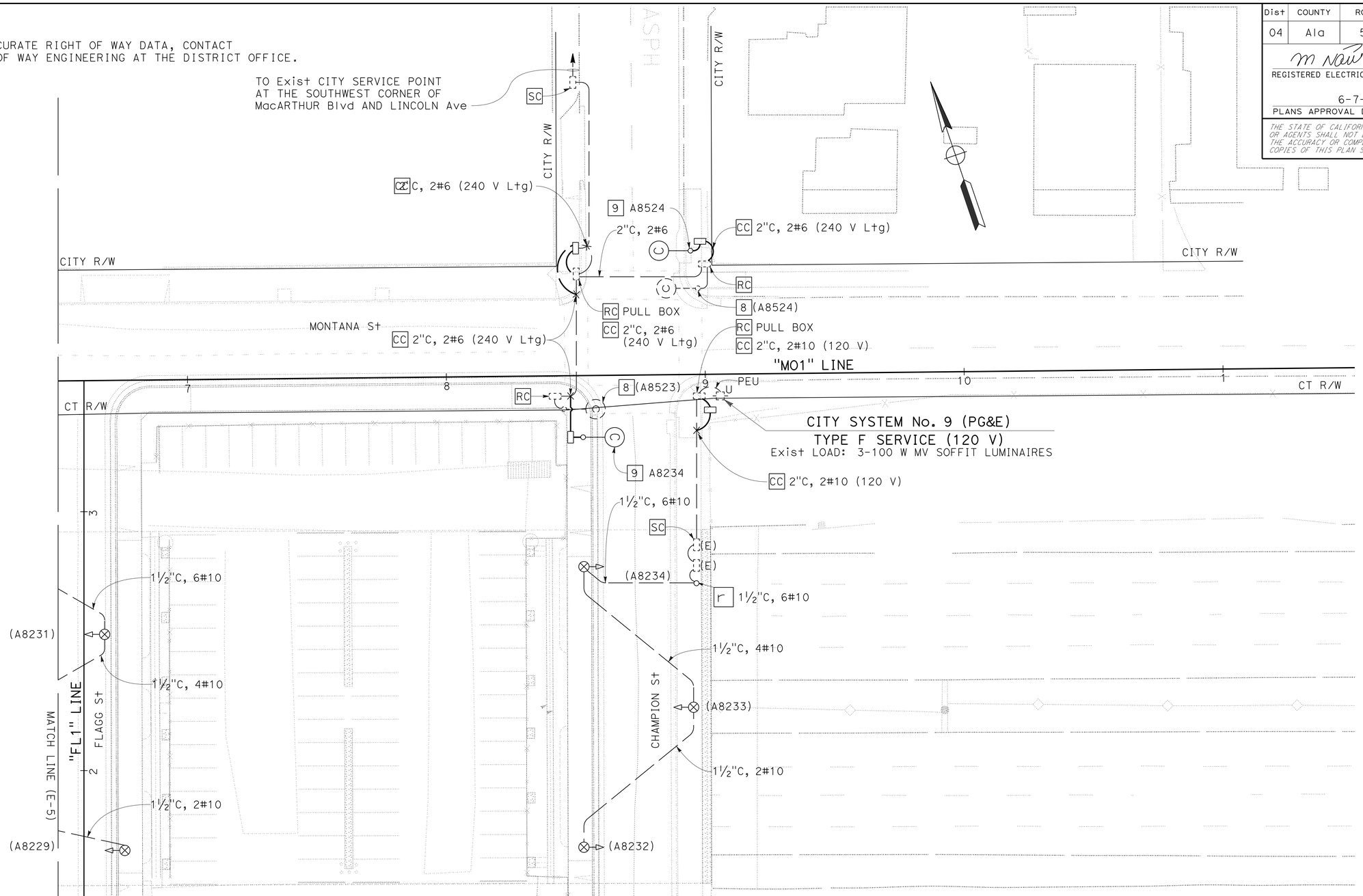

LIGHTING (CITY)

APPROVED FOR ELECTRICAL WORK ONLY

FOR NOTES, ABBREVIATIONS AND LEGEND, SEE SHEET E-1

SIGNAL AND LIGHTING (CITY)

SCALE: 1" = 20'

E-6

STATE OF CALIFORNIA - DEPARTMENT OF TRANSPORTATION
Caltrans
ELECTRICAL

FUNCTIONAL SUPERVISOR: BEHZAD GOLEMOHAMMADI

CALCULATED-DESIGNED BY: PIERRE LASSALLE
CHECKED BY: MAHMOOD NOII

REVISED BY: PL
DATE REVISED: 6-1-16

LAST REVISION 05-19-16 | DATE PLOTTED => 09-AUG-2016 | TIME PLOTTED => 13:18

Dist	COUNTY	ROUTE	POST MILES TOTAL PROJECT	SHEET No.	TOTAL SHEETS
04	Ala	580	41.5	70	123

REGISTERED ELECTRICAL ENGINEER 6-1-16 DATE

6-7-16
PLANS APPROVAL DATE

REGISTERED PROFESSIONAL ENGINEER Mahmood Noii No. 13717 Exp. 6-30-17 ELECTRICAL STATE OF CALIFORNIA

THE STATE OF CALIFORNIA OR ITS OFFICERS OR AGENTS SHALL NOT BE RESPONSIBLE FOR THE ACCURACY OR COMPLETENESS OF SCANNED COPIES OF THIS PLAN SHEET.

NOTE:

FOR ACCURATE RIGHT OF WAY DATA, CONTACT RIGHT OF WAY ENGINEERING AT THE DISTRICT OFFICE.

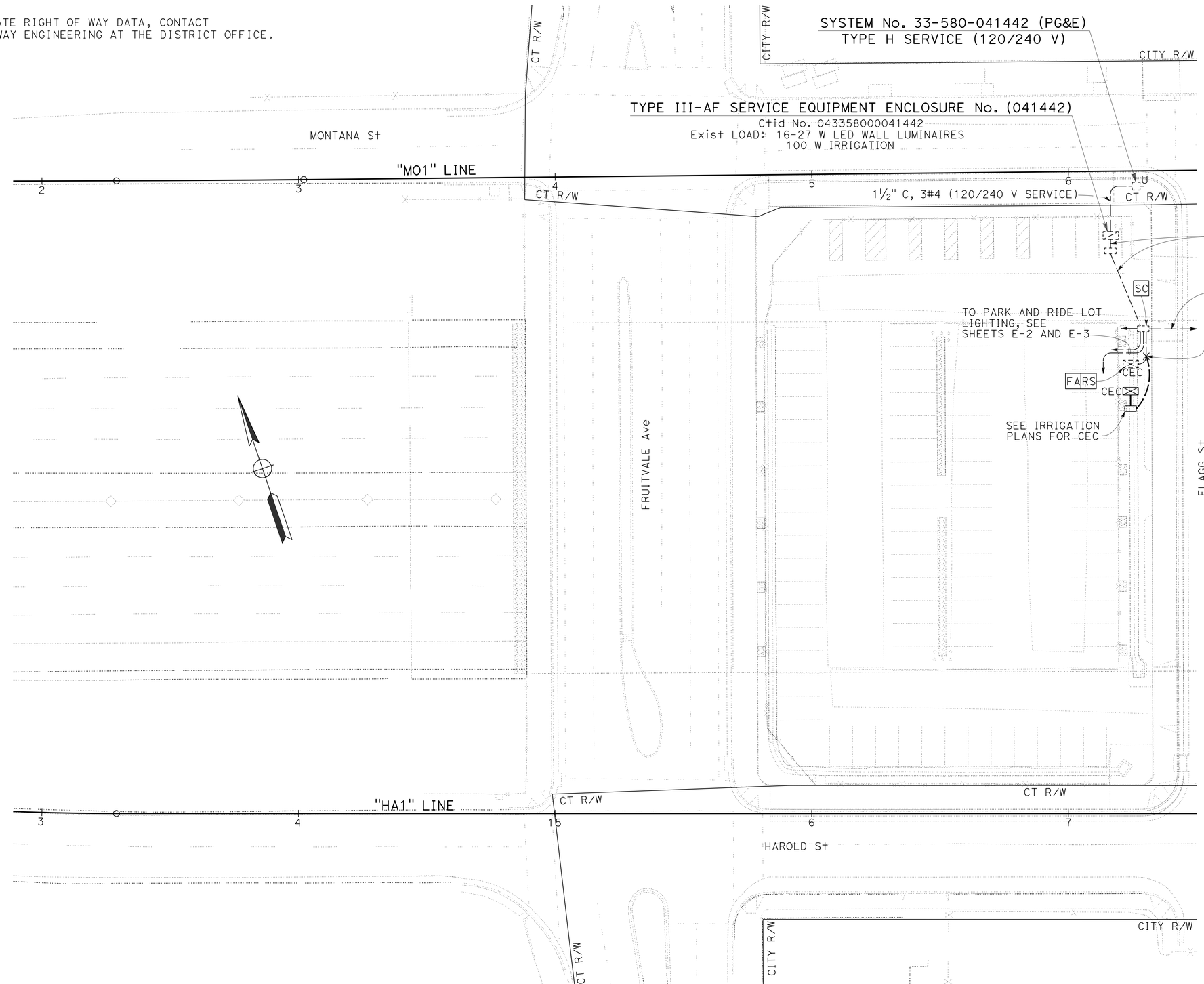

ELECTRIC SERVICE FOR IRRIGATION

SCALE: 1" = 20'

APPROVED FOR ELECTRICAL WORK ONLY

FOR NOTES, ABBREVIATIONS AND LEGEND, SEE SHEET E-1

E-7

STATE OF CALIFORNIA - DEPARTMENT OF TRANSPORTATION
Caltrans
ELECTRICAL

FUNCTIONAL SUPERVISOR: BEHZAD GOLEMOHAMMADI

CALCULATED-DESIGNED BY: PIERRE LASSALLE
CHECKED BY: MAHMOOD NOII

REVISED BY: PL
DATE REVISED: 6-1-16

LAST REVISION 05-19-16 | DATE PLOTTED => 09-AUG-2016 | TIME PLOTTED => 13:18

Dist	COUNTY	ROUTE	POST MILES TOTAL PROJECT	SHEET No.	TOTAL SHEETS
04	Ala	580	41.5	71	123

REGISTERED CIVIL ENGINEER 5-30-16 DATE

6-7-16
PLANS APPROVAL DATE

REGISTERED PROFESSIONAL ENGINEER James Chuang No. 74690 Exp. 12-31-17 CIVIL STATE OF CALIFORNIA

THE STATE OF CALIFORNIA OR ITS OFFICERS OR AGENTS SHALL NOT BE RESPONSIBLE FOR THE ACCURACY OR COMPLETENESS OF SCANNED COPIES OF THIS PLAN SHEET.

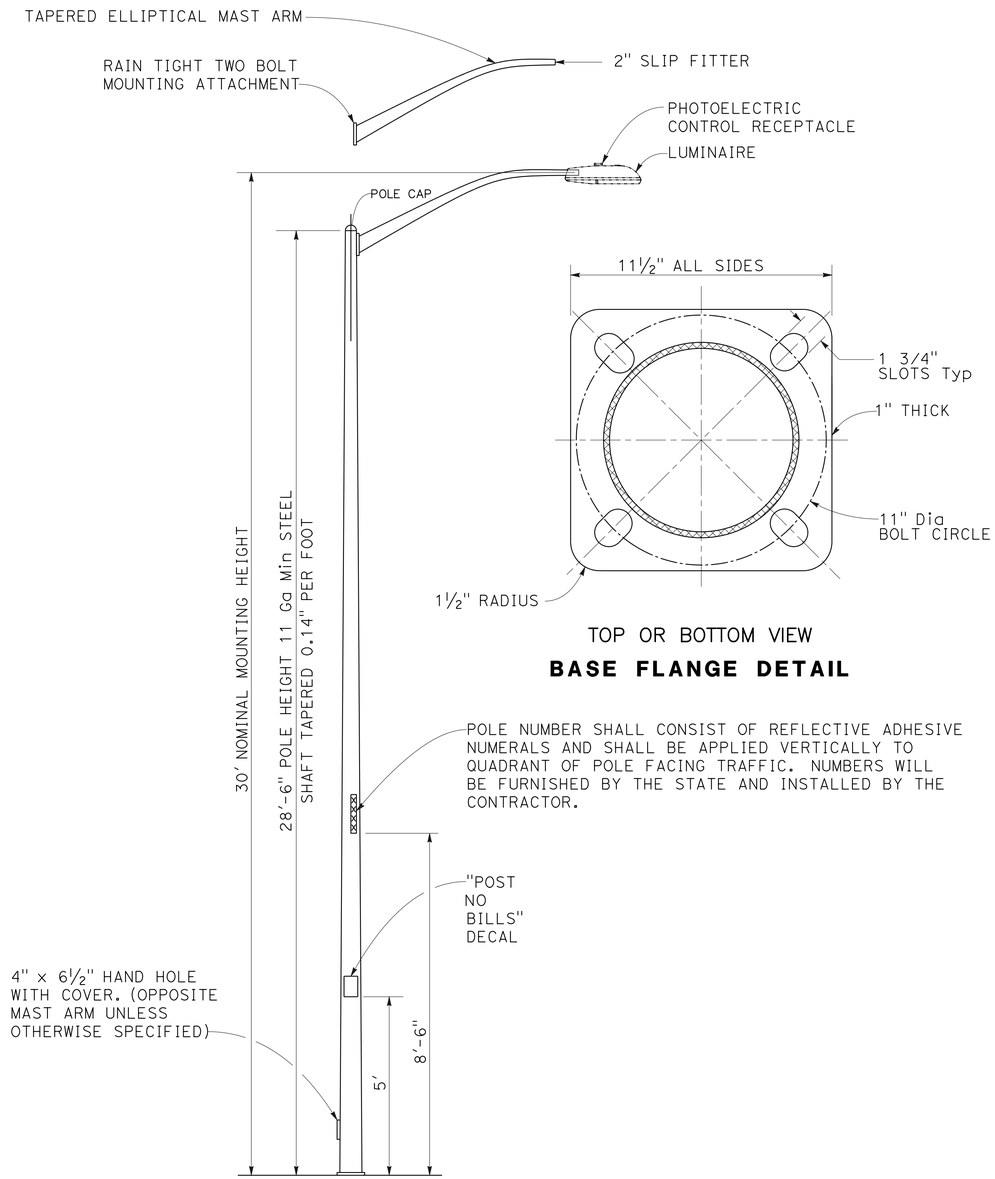

28'-6" SINGLE LIGHT STREET LIGHT STANDARD

NOTES:

USE FOUNDATION TYPE "A".

THE MATERIAL WILL BE ORDERED WITH EITHER A POWDER COAT FINISH OR GALVANIZED. ALL EXTERIOR SURFACES SHALL BE COATED WITH TRIGLYCIDYL ISOCYANURATE, (TGIC), POLYESTER POWDER, (OR EQUIVALENT), TO A MINIMUM DRY FILM THICKNESS OF 3 MILS. IN ACCORDANCE WITH 5A OR 5B OF ASTM-D33359. THE COLOR SHALL BE THE CITY OF OAKLAND'S, "BOXWOOD GREEN." THE INNER SURFACE SHALL BE COATED WITH A LONG OIL ALKYD TO A MINIMUM DRY FILM THICKNESS OF 2 MILS. GALVANIZING SHALL BE HOT DIPPED IN ACCORDANCE WITH ASTM-A123.

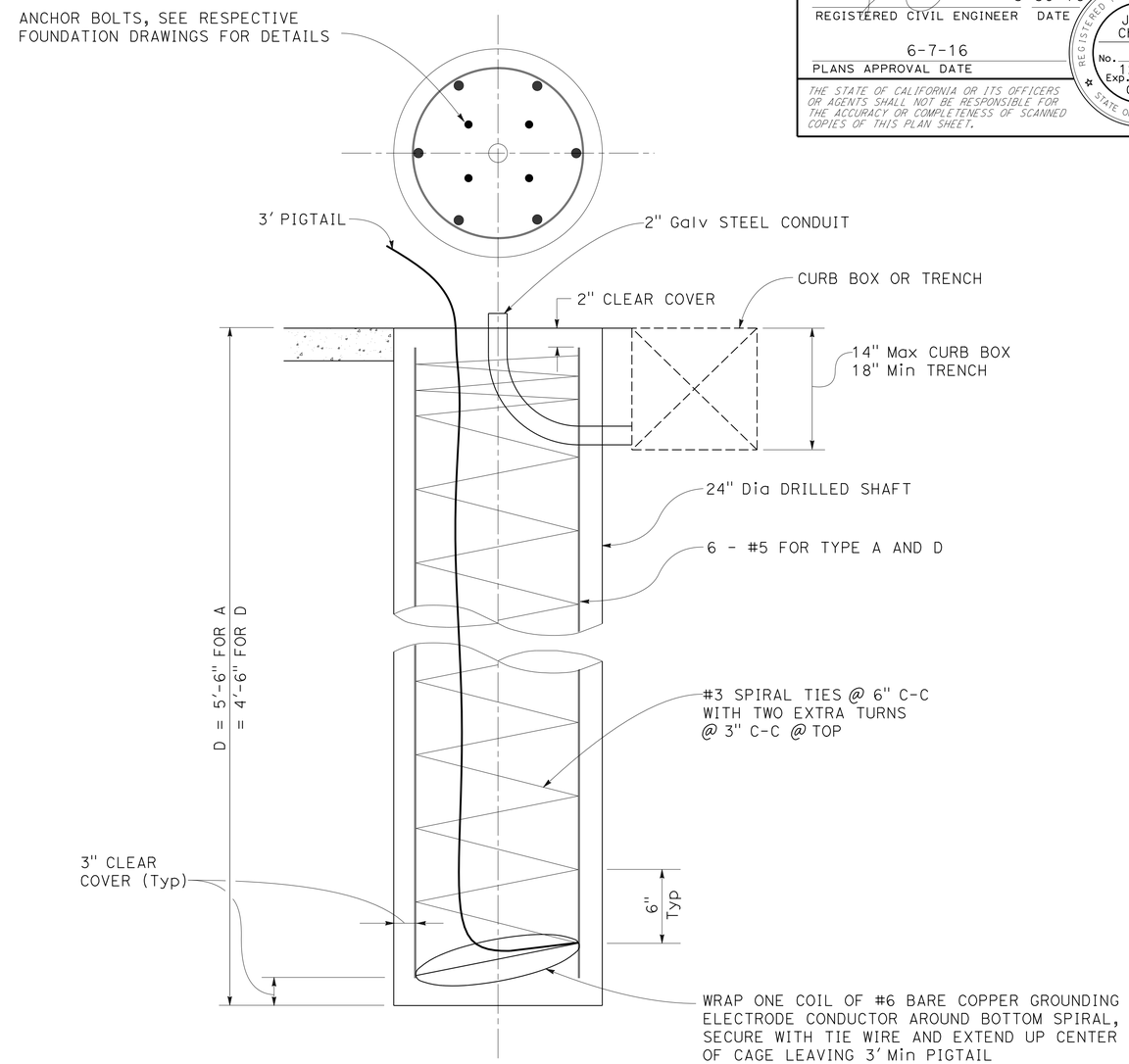

TYPE A: 30' STANDARD LUMINAIRE

TYPE D: 15' ORNAMENTAL LUMINAIRE (FOREST PARK, WASHINGTON, MERRIWEATHER, CLAREMONT, BROADWAY)

FOUNDATION REINFORCING DETAILS FOR LIGHT STANDARD

ELECTRICAL DETAILS
(CITY OF OAKLAND ELECTRICAL SYSTEMS)

NO SCALE

E-8

STATE OF CALIFORNIA - DEPARTMENT OF TRANSPORTATION	FUNCTIONAL SUPERVISOR	REVISED BY	PL
Caltrans® ELECTRICAL	BEHZAD GOLEMOHAMMADI	DATE REVISED	6-1-16
	PIERRE LASSALLE	CALCULATED-DESIGNED BY	
	MAHMOOD NOII	CHECKED BY	

LAST REVISION 05-04-16 | DATE PLOTTED => 09-AUG-2016 | TIME PLOTTED => 13:18

Dist	COUNTY	ROUTE	POST MILES TOTAL PROJECT	SHEET No.	TOTAL SHEETS
04	Ala	580	41.5	72	123

REGISTERED CIVIL ENGINEER 5-30-16 DATE

6-7-16
PLANS APPROVAL DATE

REGISTERED PROFESSIONAL ENGINEER James Chuang No. 74690 Exp. 12-31-17 CIVIL STATE OF CALIFORNIA

THE STATE OF CALIFORNIA OR ITS OFFICERS OR AGENTS SHALL NOT BE RESPONSIBLE FOR THE ACCURACY OR COMPLETENESS OF SCANNED COPIES OF THIS PLAN SHEET.

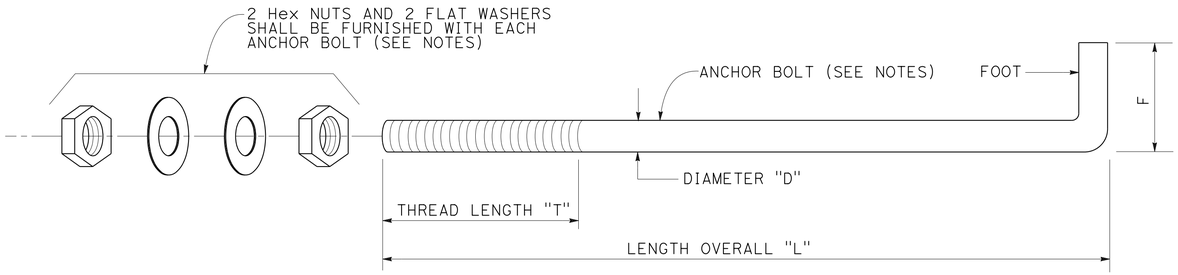

NOTES:

1. MATERIAL FOR ANCHOR BOLTS, Hex NUTS AND FLAT WASHERS SHALL BE HOT-ROLLED MILD STEEL A307 OR A36.
2. ANCHOR BOLTS SHALL HAVE A CUT THREAD AND SHALL BE HOT-DIPPED GALVANIZED IN ACCORDANCE WITH ASTM-A123 AFTER FORMING AND THREADING.
3. FLAT WASHERS SHALL BE GALVANIZED AFTER FORMING.

TABLE OF ANCHOR BOLT DIMENSIONS

ITEM	USE	D	L	T	F
1	Fdn FOR 3" OR 4" PIPE PEDESTAL OR STANDARD	5/8"	24"	8"	3
2	HAND DUG - HOLE Fdn, 36" D.P., FOR ELECTROLIER	1"	36"	8"	4
3	BORED-HOLE Fdn (SEE SHEET E-8) FOR ELECTROLIER, TYPE "A"	1"	36"	8"	4
4	BORED-HOLE Fdn (SEE SHEET E-8) FOR Std WITH 20' Max T.S. MAST ARM, TYPE "B"	1 1/4"	42"	8"	6
5	BORED-HOLE Fdn (SEE SHEET E-8) FOR Std WITH 30' Max T.S. MAST ARM, TYPE "C"	1 1/2"	54"	8"	6

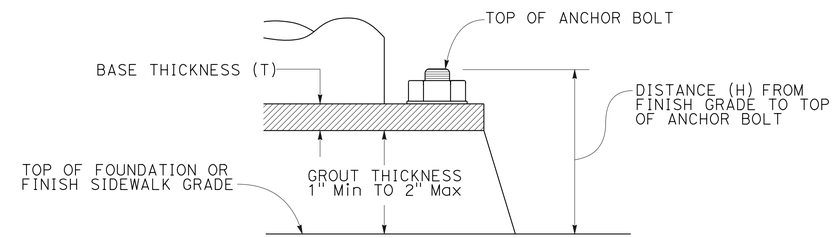

TABLE OF CONSTRUCTION DIMENSIONS

TYPE OF STANDARD	T	H
3" OR 4" PIPE PEDESTAL OR STANDARD	3/4" - 7/8"	4"
ELECTROLIER	3/4" - 1"	4 1/2"
STANDARD WITH 20' Max T.S. MAST ARM	1 1/4"	5"
STANDARD WITH 30' Max T.S. MAST ARM	1 1/2"	5 1/2"

ANCHOR BOLTS FOR PEDESTALS AND STANDARDS

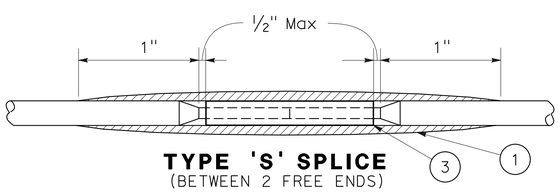

TYPE 'S' SPLICE
(BETWEEN 2 FREE ENDS)

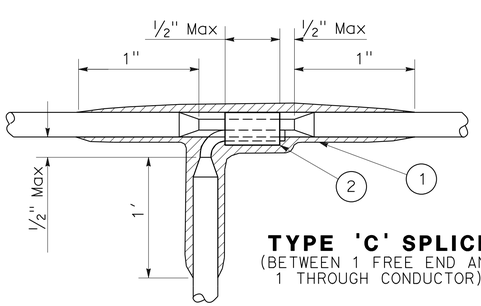

TYPE 'C' SPLICE
(BETWEEN 1 FREE END AND 1 THROUGH CONDUCTOR)

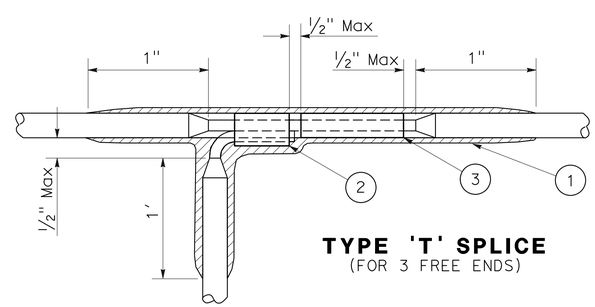

TYPE 'T' SPLICE
(FOR 3 FREE ENDS)

SPLICING NOTES:

1. TAPE TO 1 1/2 TIMES THICKNESS OF ORIGINAL INSULATION WITH SCOTCH #33 ELECTRICAL TAPE HALF LAPPED - 7 ML AND 3/4" WIDE.
2. 'C' SHAPED COMPRESSION CONNECTOR - BURNDY TYPE "YC-C" OR EQUAL
3. LONG BARREL COMPRESSION SLEEVE-NICOPRESS OR BURNDY TYPE "YS".

STANDARD STREET LIGHT SPLICES- MULTIPLE SYSTEMS

COLOR CODE FOR MISCELLANEOUS WIRE AND CABLE GROUND - GREEN

MULTIPLE STREET LIGHTING CIRCUITS (THWN/THNN WIRE)
ALL NIGHT CIRCUITS

120 V: BLACK, WHITE — 120 V: RED — 240 V: BLACK, RED

TRAFFIC SIGNAL SERVICES (THWN/THNN WIRE)

2-WIRE SERVICE { BLACK, WHITE (NEUTRAL), RED } 3-WIRE SERVICE

ELECTRICAL DETAILS
(CITY OF OAKLAND ELECTRICAL SYSTEMS)

NO SCALE

E-9

STATE OF CALIFORNIA - DEPARTMENT OF TRANSPORTATION
Caltrans
ELECTRICAL

FUNCTIONAL SUPERVISOR: BEHZAD GOLEMOHAMMADI
CALCULATED-DESIGNED BY: PIERRE LASSALLE
CHECKED BY: MAHMOOD NOII
REVISED BY: PL
DATE REVISED: 6-1-16

LAST REVISION 05-04-16
DATE PLOTTED => 09-AUG-2016
TIME PLOTTED => 13:18

Dist	COUNTY	ROUTE	POST MILES TOTAL PROJECT	SHEET No.	TOTAL SHEETS
04	Ala	580	41.5	73	123

REGISTERED CIVIL ENGINEER 5-30-16 DATE

6-7-16
PLANS APPROVAL DATE

REGISTERED PROFESSIONAL ENGINEER James Chuang No. 74690 Exp. 12-31-17 CIVIL STATE OF CALIFORNIA

THE STATE OF CALIFORNIA OR ITS OFFICERS OR AGENTS SHALL NOT BE RESPONSIBLE FOR THE ACCURACY OR COMPLETENESS OF SCANNED COPIES OF THIS PLAN SHEET.

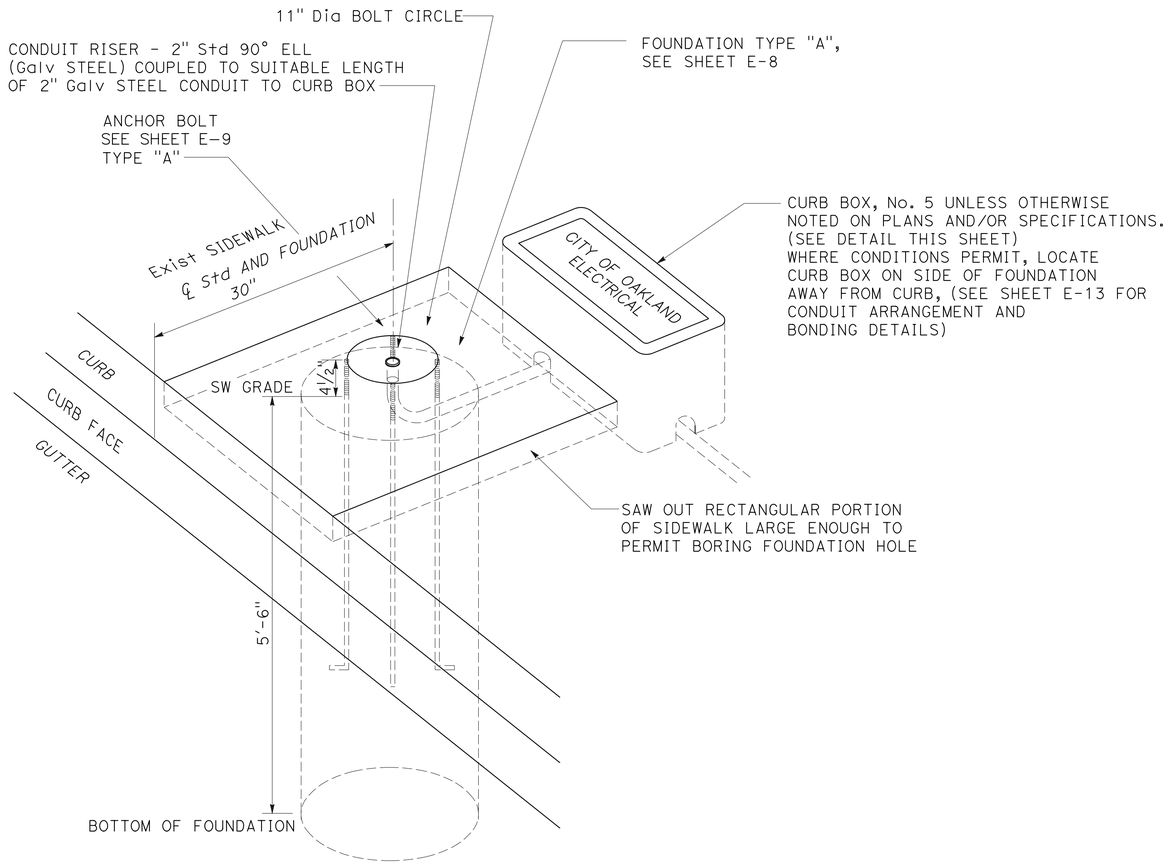

METHOD "A"

INSTALLATION IN AREAS WITH EXISTING SIDEWALK

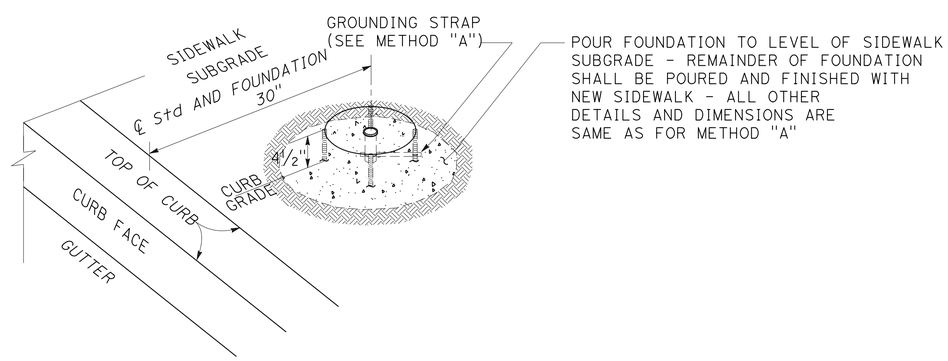

METHOD "B"

FOR AREAS WHERE NEW SIDEWALK IS TO BE INSTALLED

BORED-HOLE FOUNDATION 30' STANDARD WITH LUMINAIRE MAST ARM

(SEE SHEET E-11)

ELECTRICAL DETAILS
(CITY OF OAKLAND ELECTRICAL SYSTEMS)

NO SCALE

E-10

STATE OF CALIFORNIA - DEPARTMENT OF TRANSPORTATION
Caltrans
ELECTRICAL

FUNCTIONAL SUPERVISOR: BEHZAD GOLEMOHAMMADI
CALCULATED-DESIGNED BY: PIERRE LASSALLE
CHECKED BY: MAHMOOD NOII
REVISED BY: PL
DATE REVISED: 6-1-16

LAST REVISION 05-19-16 | DATE PLOTTED => 09-AUG-2016 | TIME PLOTTED => 13:18

Dist	COUNTY	ROUTE	POST MILES TOTAL PROJECT	SHEET No.	TOTAL SHEETS
04	Ala	580	41.5	74	123

REGISTERED CIVIL ENGINEER 5-30-16 DATE

6-7-16
PLANS APPROVAL DATE

REGISTERED PROFESSIONAL ENGINEER James Chuang No. 74690 Exp. 12-31-17 CIVIL STATE OF CALIFORNIA

THE STATE OF CALIFORNIA OR ITS OFFICERS OR AGENTS SHALL NOT BE RESPONSIBLE FOR THE ACCURACY OR COMPLETENESS OF SCANNED COPIES OF THIS PLAN SHEET.

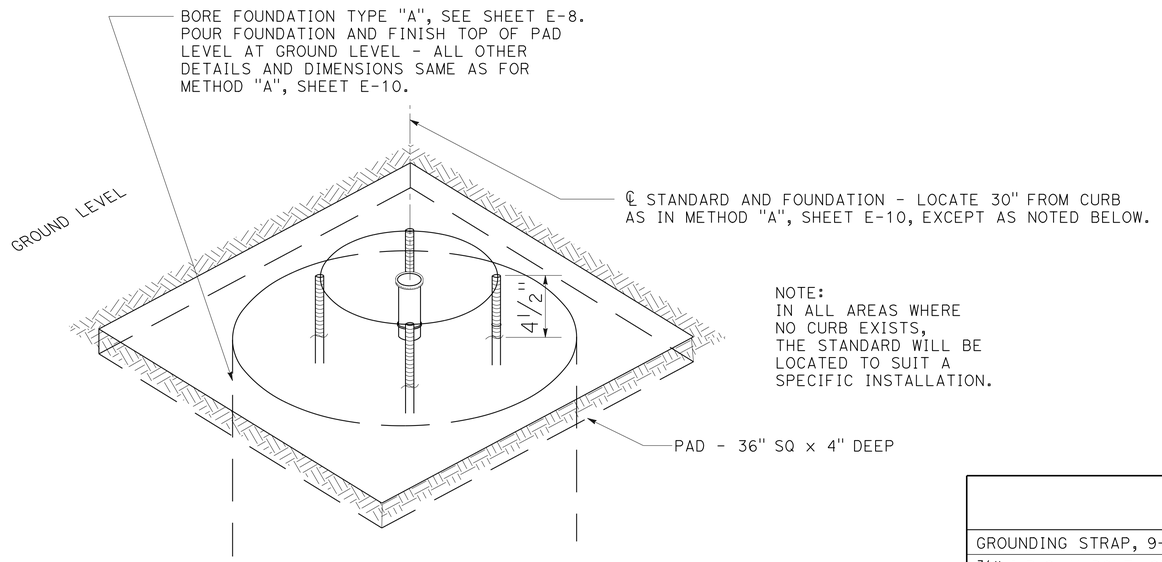

METHOD "C"

FOR AREAS WHERE NO SIDEWALK EXISTS

MATERIAL LIST (PER LIGHT STANDARD)

ITEM AND DESCRIPTION	REQUIRED
GROUNDING STRAP, 9-1/16" x 1-1/4" x 3/16" FLAT BAR, STEEL, SEE SHEET E-12	1
3/4" I.P.S. U-BOLT, STEEL, SEE SHEET E-12	1
2" I.P.S. U-BOLT, STEEL, SEE SHEET E-12	1
STREET LIGHTING STANDARD, ANCHOR BASE TYPE, 11" Dia BOLT CIRCLE	1
ANCHOR BOLT, 1" Dia x 36" , SEE SHEET E-9, TYPE "A"	4
1" REGULAR HEX NUT, Galv STEEL (2 EACH FURNISHED WITH EACH ANCHOR BOLT), SEE SHEET E-9	8
1" FLAT WASHER, Galv STEEL (2 EACH FURNISHED WITH EACH ANCHOR BOLT), SEE SHEET E-9	8
2" CONDUIT ELL, STANDARD. 90°, Galv STEEL - CPL. TO LENGTH OF 2" Galv STEEL CONDUIT	1
2" CONDUIT BUSHING, PLAIN, Galv STEEL	1
2" CONDUIT BUSHING, GROUNDING, BRONZE - O-Z No. GB2008	1
CURB BOX, No. 5 SIZE UNLESS OTHERWISE NOTED ON PLANS AND/OR SPECIFICATIONS	1
SEE SHEET E-12	
CONCRETE, SIDEWALK, 5-SACK MIX	1 YARD
CONCRETE, LATEX	AS REQUIRED
CRUSHED ROCK, 3/4" MAXIMUM AGGREGATE	AS REQUIRED

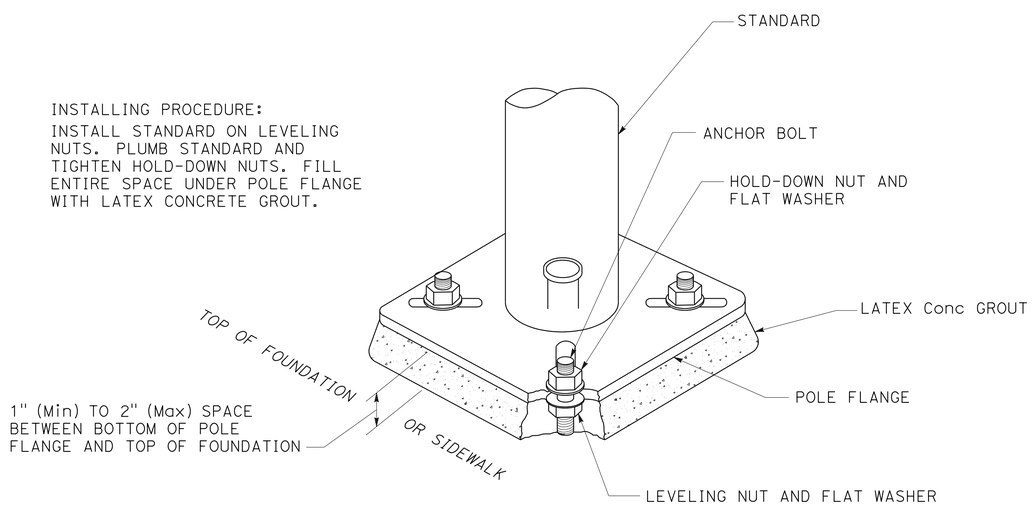

INSTALLATION OF STANDARD ON FOUNDATION

FOR USE WITH METHOD "A", "B" (SHEET E-10), OR "C" (ABOVE)

BORED-HOLE FOUNDATION 30' STANDARD WITH LUMINAIRE MAST ARM (Cont)

(SEE SHEET E-10 ALSO)

ELECTRICAL DETAILS
(CITY OF OAKLAND ELECTRICAL SYSTEMS)

NO SCALE

E-11

STATE OF CALIFORNIA - DEPARTMENT OF TRANSPORTATION
Caltrans®
ELECTRICAL

FUNCTIONAL SUPERVISOR: BEHZAD GOLEMOHAMMADI
CALCULATED-DESIGNED BY: PIERRE LASSALLE
CHECKED BY: MAHMOOD NOII
REVISED BY: PL
DATE REVISED: 6-1-16

LAST REVISION 05-04-16
DATE PLOTTED => 09-AUG-2016
TIME PLOTTED => 13:18

Dist	COUNTY	ROUTE	POST MILES TOTAL PROJECT	SHEET No.	TOTAL SHEETS
04	Ala	580	41.5	75	123

REGISTERED CIVIL ENGINEER DATE 5-30-16

PLANS APPROVAL DATE 6-7-16

REGISTERED PROFESSIONAL ENGINEER James Chuang No. 74690 Exp. 12-31-17 CIVIL STATE OF CALIFORNIA

THE STATE OF CALIFORNIA OR ITS OFFICERS OR AGENTS SHALL NOT BE RESPONSIBLE FOR THE ACCURACY OR COMPLETENESS OF SCANNED COPIES OF THIS PLAN SHEET.

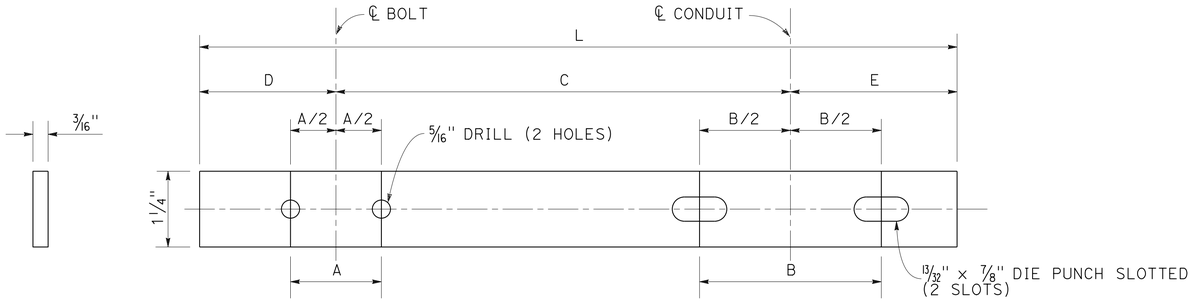

NOTE: GROUNDING STRAPS SHALL BE MADE OF 1 1/4" x 3/16" STEEL FLAT BAR AND GALVANIZED.

TABLE 1
GROUND STRAP DATA

PC No.	FOR USE IN FOUNDATION FOR	DIAMETER OF ANCHOR BOLT CIRCLE	DIAMETER OF ANCHOR BOLT	SIZE OF CONDUIT RISER	DIMENSIONS IN INCHES					
					A	B	C	D	E	L
A53	30' (Max) S.L. STANDARD (SERIES SYSTEM)	11"	1"	1 1/4"	1 3/8	2	5 7/16	1 5/16	2	8 3/4
A54	4" PIPE STANDARD (10' Max HEIGHT)	7 1/2"	5/8"	2"	1	2 11/16	3 5/8	1 1/16	2 5/16	7
A57	20'-30' STREET LIGHT STANDARD (MULTIPLE)	11"	1"	2"	1 3/8	2 11/16	5 7/16	1 5/16	2 5/16	9 1/16
A60	30' STANDARD WITH STREET LIGHT MAST ARM OR 20' TRAFFIC SIGNAL STANDARD WITH 20' (Max) TRAFFIC SIGNAL MAST ARM	12 1/2"	1 1/4"	2"	1 5/8	2 11/16	6 3/16	1 3/8	2 5/16	9 7/8
A61	30' STANDARD WITH LUMINAIRE MAST ARM AND 30' (Max) SIGNAL MAST ARM	14 1/2"	1 1/2"	2"	2	2 11/16	7 3/16	1 3/4	2 5/16	11 1/4
A63	GAMEWELL TYPE PC PED	7 3/4"	1/2"	2"	1	2 11/16	3 3/8	1	2 5/16	6 11/16
A64	3" PIPE STANDARD (F.A. OR P.B. PED.)	6"	5/8"	1 1/4"	1	2	2 15/16	1	1 15/16	5 7/8
A65	SIGNAL Std WITH 35' TO 45' SIGNAL MAST ARM	17 1/2"	1 3/4"	2"	2 1/4	2 11/16	8 3/4	2	2 5/16	13 1/16

TABLE II
U-BOLT DATA

PC No.	SIZE	DIMENSIONS IN INCHES					ASA THD.	HEX NUT SIZE
		F	G	H	I	T		
P31	3/8" I.P.S.	3/4	1	1 1/4	3/4	1/4	20 NC	1/4"-20, REG.
P32	3/4" I.P.S.	1 1/8	1 3/8	1 3/8	7/8	1/4	20 NC	1/4"-20, REG.
P33	1" I.P.S.	1 3/8	1 5/8	1 1/2	7/8	1/4	20 NC	1/4"-20, REG.
P34	1 1/4" I.P.S.	1 3/4	2	1 11/16	7/8	1/4	20 NC	1/4"-20, REG.
P35	1 3/4" I.P.S.	1 13/16	2 1/16	2 11/32	1	1/4	18 NC	1/4"-18, REG
P36	2" I.P.S.	2 7/16	2 3/4	2 1/8	1	5/16	18 NC	5/16"-18, REG.

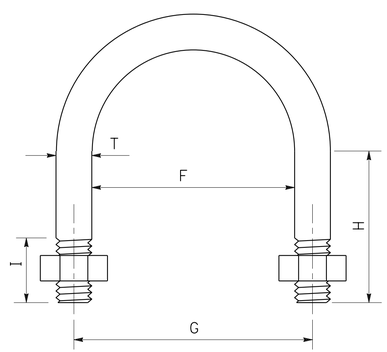

TABLE III
GROUND STRAP U-BOLT SETS

GROUND STRAP PC No.	U-BOLT PC Nos.	
	FOR CLAMPING ANCHOR BOLT	FOR CLAMPING CONDUIT
A53	P32	P34
A54	P31	P36
A57	P32	P36
A60	P33	P36
A61	P34	P36
A63	P31	P36
A64	P31	P34
A65	P35	P36

NOTES:

1. EACH U-BOLT SHALL BE FURNISHED WITH 2 HEX NUTS.
2. U-BOLTS AND HEX NUTS SHALL BE MADE OF STEEL, GALVANIZED OR CADMIUM PLATED.
3. U-BOLTS MAY BE EITHER STANDARD TYPES COMMERCIALLY AVAILABLE (SIZES AS SHOWN IN TABLE II), OR SHOP MADE TO DIMENSIONS IN TABLE II.

GENERAL NOTES:

ALL WORK SHALL CONFORM TO THE 1997 UNIFORM BUILDING CODE, INCLUDING ALL THE REVISIONS AND AS ADOPTED BY THE LOCAL BUILDING CODES AND ORDINANCES.

ALL DIMENSIONS RELATING TO THE EXISTING CONDITIONS SHALL BE VERIFIED IN THE FIELD. DIMENSIONS SHALL NOT BE SCALED FROM THE DRAWINGS. DIMENSIONS FOR BOLTS, BOLT CENTERS AND LOCATION IS PROVIDED FOR INFORMATION ONLY AND SHOULD BE VERIFIED BY THE EQUIPMENT SUPPLIER PRIOR TO INSTALLING AND POURING.

ANY DISCREPANCIES SHALL BE IMMEDIATELY BROUGHT TO THE NOTICE OF THE ENGINEER. WORK SHALL NOT COMMENCE UNTIL THE DISCREPANCIES ARE CLARIFIED AND THE REVISED DRAWINGS/INSTRUCTIONS ARE ISSUED BY THE ENGINEER.

JOB SITE REVIEW: THE CONTRACTOR SHALL NOTIFY THE ENGINEER AT LEAST TWO DAYS PRIOR TO EACH OF THE FOLLOWING ITEMS SO THE ENGINEER MAY MAKE AN APPROPRIATE JOB SITE REVIEW IF AUTHORIZED BY THE OWNER.:

- PRIOR TO POURING ANY STRUCTURAL CONCRETE SUCH AS FOUNDATION AND RETAINING WALLS, CHECK FOR DESIGNED STEEL REINFORCING AND ANCHOR BOLT.

SAFETY MEASURES: AT ALL TIMES THE CONTRACTOR SHALL BE SOLELY AND COMPLETELY RESPONSIBLE FOR ALL THE ENGINEERING OF TEMPORARY SHORING, ADDITIONAL REINFORCING, BRACING, FORMWORK, SCAFFOLDING, ERECTION METHODS AND RELATED CONDITIONS OF THE JOB SITE INCLUDING SAFETY OF PERSONS AND PROPERTY, AND FOR ALL NECESSARY INDEPENDENT ENGINEERING REVIEW OF THESE CONDITIONS. THE ENGINEER'S JOB SITE REVIEW IS NOT INTENDED TO INCLUDE REVIEW OF THE ADEQUACY OF THE CONTRACTOR'S SAFETY MEASURES.

FOUNDATION

ALL SITE WORK AND GRADING, DRAINAGE SYSTEMS, FOUNDATIONS AND OTHER SOIL CONSIDERATIONS SHALL CONFORM TO THE RECOMMENDATION OF CHAPTER 29 OF THE UNIFORM BUILDING CODE (UBC).

CONCRETE WORK SHALL CONFORM TO "ACI MANUAL OF CONCRETE PRACTICE", SPECIFICALLY "SPECIFICATIONS FOR STRUCTURAL CONCRETE FOR BUILDINGS", ACI 301 INCLUDING LATEST EDITIONS. CONTRACTOR SHALL SUBMIT HIS PROPOSED METHOD OF CURING OF CONCRETE FOR REVIEW.

CONCRETE FOR POURED IN PLACE FOUNDATIONS AND RETAINING WALLS SHALL HAVE A MINIMUM ULTIMATE COMPRESSIVE STRENGTH OF 3,000 PSI IN 28 DAYS. MIX DESIGN SHALL BE SUBMITTED TO THE ENGINEER FOR REVIEW AT LEAST TWO WEEKS PRIOR TO POURING CONCRETE. CONCRETE SLUMP SHALL BE 4.0" MAXIMUM. THE SLUMP SHALL BE DETERMINED BY ASTM C143.

CONCRETE FOR PRECAST RETAINING WALLS SHALL HAVE A MINIMUM ULTIMATE COMPRESSIVE STRENGTH OF 4,000 PSI IN 28 DAYS. MIX DESIGN SHALL BE SUBMITTED TO THE ENGINEER FOR REVIEW AT LEAST TWO WEEKS PRIOR TO POURING CONCRETE. CONCRETE SLUMP SHALL BE 3.0" MAXIMUM. THE SLUMP SHALL BE DETERMINED BY ASTM C143.

SPECIAL INSPECTION SHALL BE PROVIDED PER SECTION 305 OF UBC.

REINFORCING STEEL SHALL BE DEFORMED BILLET STEEL, CONFORMING TO ASTM A615-82, GRADE 40, SPECIFICATION FOR #4 AND SMALLER AND ASTM A516-82, GRADE 60, SPECIFICATION FOR #5 AND LARGER. BARS SHALL BE CONTINUOUS AROUND CORNERS AND LAPPED MINIMUM 24" OR 32 DIAMETERS FOR GRADE 40 BARS, AND 48 DIAMETERS FOR GRADE 60 BARS UNLESS OTHERWISE SHOWN. LAPS SHALL BE STAGGERED. FIELD BENDING OF REINFORCING BARS SHALL BE AVOIDED AS FAR AS POSSIBLE. ONLY "COLD BENDING" OF BARS IS PERMITTED AS APPROVED BY THE ENGINEER. SUBMIT SHOP DRAWINGS AND MILL CERTIFICATES TO TO ENGINEER FOR REVIEW PRIOR TO FABRICATION.

COVER FOR REINFORCEMENT SHALL BE 3" CLEAR FOR ALL CONCRETE POURED AGAINST AND/OR EXPOSED TO EARTH AND 2" CLEAR FOR ALL CONCRETE FORMED AGAINST EARTH UNLESS OTHERWISE SHOWN.

ALL BOLTS SHALL CONFORM TO ASTM A307 OR ASTM 1-36 UNLESS OTHERWISE NOTED.

ANCHOR BOLTS AND INSERTS SHALL BE RIGIDLY HELD IN PLACE PRIOR TO CONCRETING.

ELECTRICAL DETAILS
(CITY OF OAKLAND ELECTRICAL SYSTEMS)

NO SCALE

E-12

REVISED BY	DATE REVISED
PL	6-1-16

PIERRE LASSALLE — MAHMOOD NOII

CALCULATED-DESIGNED BY — CHECKED BY

FUNCTIONAL SUPERVISOR — BEHZAD GOLEMOHAMMADI

STATE OF CALIFORNIA - DEPARTMENT OF TRANSPORTATION

Caltrans®

ELECTRICAL

LAST REVISION 05-04-16 | DATE PLOTTED => 09-AUG-2016 | TIME PLOTTED => 13:18

Dist	COUNTY	ROUTE	POST MILES TOTAL PROJECT	SHEET No.	TOTAL SHEETS
04	Ala	580	41.5	76	123

REGISTERED ELECTRICAL ENGINEER 6-1-16 DATE

6-7-16
PLANS APPROVAL DATE

REGISTERED PROFESSIONAL ENGINEER Mahmood Noii No. 13717 Exp. 6-30-17 ELECTRICAL STATE OF CALIFORNIA

THE STATE OF CALIFORNIA OR ITS OFFICERS OR AGENTS SHALL NOT BE RESPONSIBLE FOR THE ACCURACY OR COMPLETENESS OF SCANNED COPIES OF THIS PLAN SHEET.

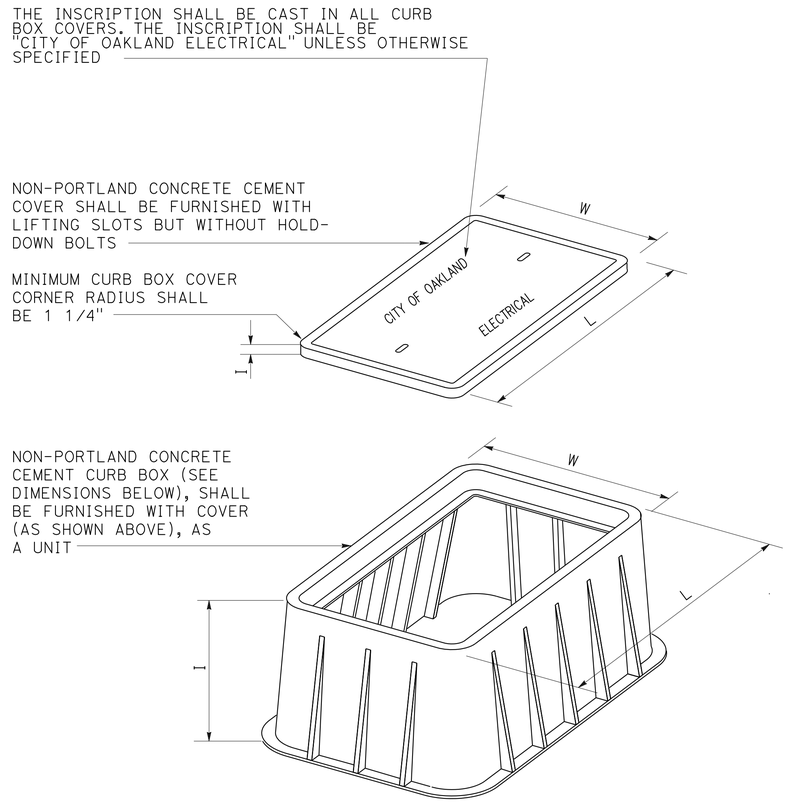

PRECAST, NON-CONCRETE STANDARD CURB BOXES

TABLE OF DIMENSIONS

CURB BOX AND COVER SIZE No.	CURB BOX						CURB BOX COVER				
	LENGTH		WIDTH		HEIGHT		LENGTH		WIDTH		HEIGHT
	Min	Max	Min	Max	Min	Max	Min	Max	Min	Max	
5	1'-11 5/8"	2'-1 3/8"	1'-2 1/8"	1'-3 7/8"	1'	1'-2"	1'-11 1/8"	1'-11 1/4"	1'-1 5/8"	1'-1 3/4"	2"
6	2'-6 7/8"	2'-9"	1'-5 7/8"	1'-7 5/8"	1'	1'-2"	2'-6 3/8"	2'-6 1/2"	1'-5 3/8"	1'-5 1/2"	2"

NOTES: MINIMUM CURB BOX COVER WALL THICKNESS SHALL BE 3/8" AT FLAT AREAS BETWEEN RIBS.
COVERS SHALL BE FLUSH WITH TOP OF BOX WHEN INSTALLED.
THE MATERIAL SHALL BE CONCRETE COLOR.

CURB BOX DETAILS

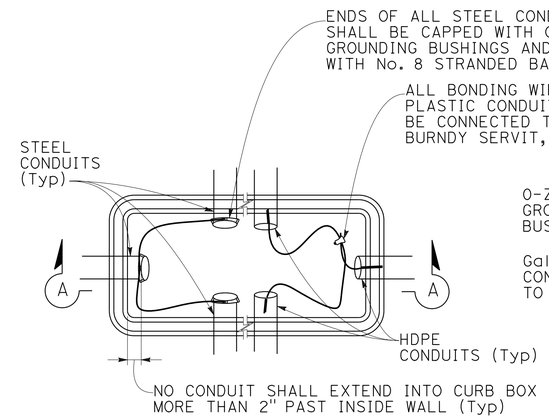

PLAN
(COMPOSITE VIEW)

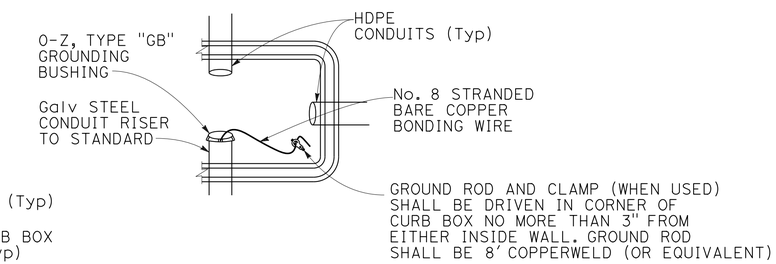

GROUNDING DETAIL
(APPLIES WHEREVER GOUND ROD IS REQUIRED)

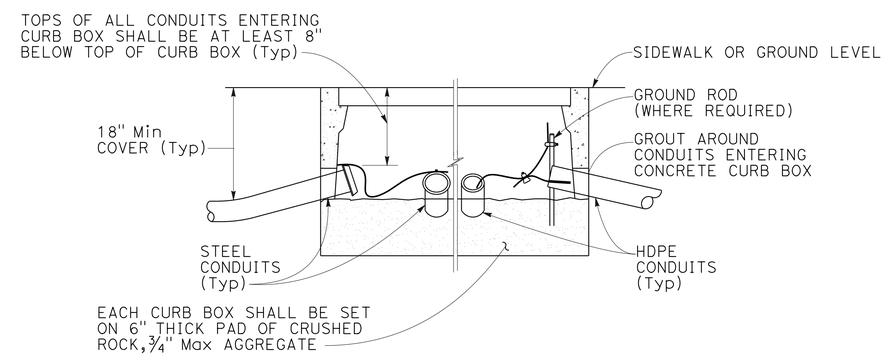

SECTION A–A
(COMPOSITE VIEW)

ARRANGEMENT OF CURB BOX AND CONDUITS

ELECTRICAL DETAILS
(CITY OF OAKLAND ELECTRICAL SYSTEMS)

NO SCALE

E-13

PIERRE LASSALLE	PL	6-1-16	
MAHMOOD NOII	REVISED BY	DATE REVISED	
CALCULATED-DESIGNED BY			
CHECKED BY			
FUNCTIONAL SUPERVISOR			
BEHZAD GOLEMOHAMMADI			

STATE OF CALIFORNIA - DEPARTMENT OF TRANSPORTATION
Caltrans
ELECTRICAL

LAST REVISION 05-04-16 | DATE PLOTTED => 09-AUG-2016 | TIME PLOTTED => 13:18

Dist	COUNTY	ROUTE	POST MILES TOTAL PROJECT	SHEET No.	TOTAL SHEETS
04	Ala	580	41.5	77	123

REGISTERED ELECTRICAL ENGINEER 6-1-16 DATE

6-7-16
PLANS APPROVAL DATE

REGISTERED PROFESSIONAL ENGINEER Mahmood Noii No. 13717 Exp. 6-30-17 ELECTRICAL STATE OF CALIFORNIA

THE STATE OF CALIFORNIA OR ITS OFFICERS OR AGENTS SHALL NOT BE RESPONSIBLE FOR THE ACCURACY OR COMPLETENESS OF SCANNED COPIES OF THIS PLAN SHEET.

MAINTAINING EXISTING ELECTRICAL SYSTEM

SHEET No.	PULL BOX
	EA
E-2	6
E-3	7

SIGNAL AND LIGHTING (CITY)

SHEET No.	APS	PED HEAD
	EA	
E-4	14	14

SIGNAL AND LIGHTING (CITY)

SHEET No.	PULL BOX	CONDUIT	CONDUCTORS
	EA	LF	
E-5	3	30	300
E-6	4	30	600

ELECTRIC SERVICE FOR IRRIGATION

SHEET No.	CONDUIT	CONDUCTORS
	LF	
E-7	10	100

ELECTRICAL QUANTITIES

E-14

STATE OF CALIFORNIA - DEPARTMENT OF TRANSPORTATION
Caltrans
ELECTRICAL

FUNCTIONAL SUPERVISOR: BEHZAD GOLEMOHAMMADI
CALCULATED-DESIGNED BY: PIERRE LASSALLE
CHECKED BY: MAHMOOD NOII
REVISED BY: PL
DATE REVISED: 6-1-16

LAST REVISION 05-19-16
DATE PLOTTED => 09-AUG-2016
TIME PLOTTED => 13:18

M

Maint	MAINTENANCE
Max	MAXIMUM
MB	METAL BEAM
MBB	METAL BEAM BARRIER
MBGR	METAL BEAM GUARD RAILING
Med	MEDIAN
MGS	MIDWEST GUARDRAIL SYSTEM
MH	MANHOLE
Min	MINIMUM
Misc	MISCELLANEOUS
Misc I & S	MISCELLANEOUS IRON AND STEEL
Mkr	MARKER
Mod	MODIFIED,
	MODIFY
Mon	MONUMENT
MP	METAL PLATE
MPGR	METAL PLATE GUARD RAILING
MR	MOVEMENT RATING
MSE	MECHANICALLY STABILIZED EMBANKMENT
Mt	MOUNTAIN, MOUNT
Mtl	MATERIAL
MVP	MAINTENANCE VEHICLE PULLOUT

N

N	NORTH
NB	NORTHBOUND
No.	NUMBER (MUST HAVE PERIOD)
Nos.	NUMBERS (MUST HAVE PERIOD)
NPS	NOMINAL PIPE SIZE
NS	NEAR SIDE
NSP	NEW STANDARD PLAN
NTS	NOT TO SCALE

O

Oblr	OBLITERATE
OC	OVERCROSSING
OD	OUTSIDE DIAMETER
OF	OUTSIDE FACE
OG	ORIGINAL GROUND
OGAC	OPEN GRADED ASPHALT CONCRETE
OGFC	OPEN GRADED FRICTION COURSE
OH	OVERHEAD
OHWM	ORDINARY HIGH WATER MARK
O-O	OUT TO OUT
Opp	OPPOSITE
OSD	OVERSIDE DRAIN

P

P	PAGE
PAP	PERFORATED ALUMINUM PIPE
PB	PULL BOX
PC	POINT OF CURVATURE,
	PRECAST
PCC	POINT OF COMPOUND CURVE,
	PORTLAND CEMENT CONCRETE
PCMS	PORTABLE CHANGEABLE MESSAGE SIGN
PCP	PERFORATED CONCRETE PIPE,
	PRESTRESSED CONCRETE PIPE
PCVC	POINT OF COMPOUND VERTICAL CURVE
PEC	PERMIT TO ENTER AND CONSTRUCT
Ped	PEDESTRIAN
Ped OC	PEDESTRIAN OVERCROSSING
Ped UC	PEDESTRIAN UNDERCROSSING
Perm Mtl	PERMEABLE MATERIAL

P continued

PG	PROFILE GRADE
PI	POINT OF INTERSECTION
PJP	PARTIAL JOINT PENETRATION
Pkwy	PARKWAY
₱,PL	PLATE
P/L	PROPERTY LINE
PM	POST MILE,
	TIME FROM NOON TO MIDNIGHT
PN	PAVING NOTCH
POC	POINT OF HORIZONTAL CURVE
POT	POINT OF TANGENT
POVC	POINT OF VERTICAL CURVE
PP	PIPE PILE,
	PLASTIC PIPE,
	POWER POLE
PPL	PREFORMED PERMEABLE LINER
PPP	PERFORATED PLASTIC PIPE
PRC	POINT OF REVERSE CURVE
PRF	PAVEMENT REINFORCING FABRIC
PRVC	POINT OF REVERSE VERTICAL CURVE
PS&E	PLANS, SPECIFICATIONS AND ESTIMATES
PS, P/S	PRESTRESSED
PSP	PERFORATED STEEL PIPE
PT	POINT OF TANGENCY
PVC	POLYVINYL CHLORIDE
Pvmt	PAVEMENT

Q

Qty	QUANTITY

R

R	RADIUS
R & D	REMOVE AND DISPOSE
R & S	REMOVE AND SALVAGE
R/C	RATE OF CHANGE
RCA	REINFORCED CONCRETE ARCH
RCB	REINFORCED CONCRETE BOX
RCP	REINFORCED CONCRETE PIPE
RCPA	REINFORCED CONCRETE PIPE ARCH
Rd	ROAD
Reinf	REINFORCED,
	REINFORCEMENT,
	REINFORCING
Rel	RELOCATE
Repl	REPLACEMENT
Ret	RETAINING
Rev	REVISED, REVISION
Rdwy	ROADWAY
RHMA	RUBBERIZED HOT MIX ASPHALT
Riv	RIVER
RM	ROAD-MIXED
RP	RADIUS POINT,
	REFERENCE POINT
RR	RAILROAD
RSP	ROCK SLOPE PROTECTION,
	REVISED STANDARD PLAN
Rt	RIGHT
Rte	ROUTE
RW	REDWOOD,
	RETAINING WALL
R/W	RIGHT OF WAY
Rwy	RAILWAY

S

S	SOUTH,
	SUPPLEMENT
SAE	STRUCTURE APPROACH EMBANKMENT
Salv	SALVAGE
SAPP	STRUCTURAL ALUMINUM PLATE PIPE
SB	SOUTHBOUND
SC	SAND CUSHION
SCSP	SLOTTED CORRUGATED STEEL PIPE
SD	STORM DRAIN
Sec	SECOND,
	SECTION
Sep	SEPARATION
SG	SUBGRADE
Shld	SHOULDER
Sht	SHEET
Sim	SIMILAR
℄	STATION LINE
SM	SELECTED MATERIAL
Spec	SPECIAL,
	SPECIFICATIONS
SPP	SLOTTED PLASTIC PIPE
SS	SLOPE STAKE
SSBM	STRAP AND SADDLE BRACKET METHOD
SSD	STRUCTURAL SECTION DRAIN
SSPA	STRUCTURAL STEEL PLATE ARCH
SSPP	STRUCTURAL STEEL PLATE PIPE
SSPPA	STRUCTURAL STEEL PLATE PIPE ARCH
SSRP	STEEL SPIRAL RIB PIPE
St	STREET
Sta	STATION
STBB	SINGLE THRIE BEAM BARRIER
Std	STANDARD
Str	STRUCTURE
Surf	SURFACING
SW	SIDEWALK,
	SOUND WALL
Swr	SEWER
Sym	SYMMETRICAL
S4S	SURFACE 4 SIDES

T

T	SEMI-TANGENT
Tan	TANGENT
TBB	THRIE BEAM BARRIER
Tbr	TIMBER
TC	TOP OF CURB
TCB	TRAFFIC CONTROL BOX
TCE	TEMPORARY CONSTRUCTION EASEMENT
Tel	TELEPHONE
Temp	TEMPORARY
TG	TOP OF GRADE
Tot	TOTAL
TP	TELEPHONE POLE
TPB	TREATED PERMEABLE BASE
TPM	TREATED PERMEABLE MATERIAL
Trans	TRANSITION

T continued

TS	TRANSVERSE,
	TRAFFIC SIGNAL,
	TUBULAR STEEL
Typ	TYPICAL

U

UC	UNDERCROSSING
UD	UNDERDRAIN
UG	UNDERGROUND
UON	UNLESS OTHERWISE NOTED
UP	UNDERPASS

V

V	VALVE,
	DESIGN SPEED
Var	VARIABLE,
	VARIES
VC	VERTICAL CURVE
VCP	VITRIFIED CLAY PIPE
Vert	VERTICAL
Via	VIADUCT
Vol	VOLUME

W

W	WEST,
	WIDTH
WB	WESTBOUND
WH	WEEP HOLE
WM	WIRE MESH
WS	WATER SURFACE
WSP	WELDED STEEL PIPE
Wt	WEIGHT
WV	WATER VALVE
WW	WINGWALL
WWLOL	WINGWALL LAYOUT LINE

X

X Sec	CROSS SECTION
Xing	CROSSING

Y

Yr	YEAR
Yrs	YEARS

Dist	COUNTY	ROUTE	POST MILES TOTAL PROJECT	SHEET No.	TOTAL SHEETS
04	Ala	580	41.5	78	123

Grace M. Tsushima
REGISTERED CIVIL ENGINEER

July 19, 2013
PLANS APPROVAL DATE

REGISTERED PROFESSIONAL ENGINEER
Grace M. Tsushima
No. C49814
Exp. 9-30-14
CIVIL
STATE OF CALIFORNIA

THE STATE OF CALIFORNIA OR ITS OFFICERS OR AGENTS SHALL NOT BE RESPONSIBLE FOR THE ACCURACY OR COMPLETENESS OF SCANNED COPIES OF THIS PLAN SHEET.

TO ACCOMPANY PLANS DATED 6-7-16

UNIT OF MEASUREMENT SYMBOLS:

Some of the symbols used in the project plan quantity tables and in the Bid Item List are:

TABLE A

SYMBOL USED	DEFINITIONS
ACRE	ACRE
CF	CUBIC FOOT
CY	CUBIC YARD
EA	EACH
GAL	GALLON
LB	POUND
LF	LINEAR FOOT
SQFT	SQUARE FOOT
SQYD	SQUARE YARD
STA	100 FEET
TAB	TABLET
TON	2,000 POUNDS

Some of the symbols used in the plans other than in the project plan quantity tables are:

TABLE B

SYMBOL USED	DEFINITIONS
ksi	KIPS PER SQUARE INCH
ksf	KIPS PER SQUARE FOOT
psi	POUNDS PER SQUARE INCH
psf	POUNDS PER SQUARE FOOT
lb/ft^3, pcf	POUNDS PER CUBIC FOOT
tsf	TONS PER SQUARE FOOT
mph, MPH *	MILES PER HOUR
ø	NOMINAL DIAMETER
oz	OUNCE
lb	POUND
kip	1,000 POUNDS
cal	CALORIE
ft	FOOT OR FEET
gal	GALLON

* For use on a sign panel only

STATE OF CALIFORNIA
DEPARTMENT OF TRANSPORTATION

ABBREVIATIONS (SHEET 2 OF 2)

NO SCALE

RSP A10B DATED JULY 19, 2013 SUPERSEDES STANDARD PLAN A10B DATED MAY 20, 2011 - PAGE 2 OF THE STANDARD PLANS BOOK DATED 2010.

REVISED STANDARD PLAN RSP A10B

2010 REVISED STANDARD PLAN RSP A10B

6-7-13

Dist	COUNTY	ROUTE	POST MILES TOTAL PROJECT	SHEET No.	TOTAL SHEETS
04	Ala	580	41.5	79	123

REGISTERED CIVIL ENGINEER

April 20, 2012
PLANS APPROVAL DATE

REGISTERED PROFESSIONAL ENGINEER
Roberta L. McLaughlin
No. C40375
Exp. 3-31-13
CIVIL
STATE OF CALIFORNIA

THE STATE OF CALIFORNIA OR ITS OFFICERS OR AGENTS SHALL NOT BE RESPONSIBLE FOR THE ACCURACY OR COMPLETENESS OF SCANNED COPIES OF THIS PLAN SHEET.

TO ACCOMPANY PLANS DATED 6-7-16

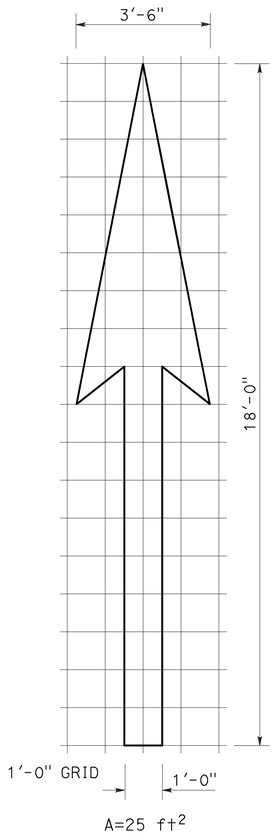

A=25 ft^2

TYPE I 18'-0" ARROW

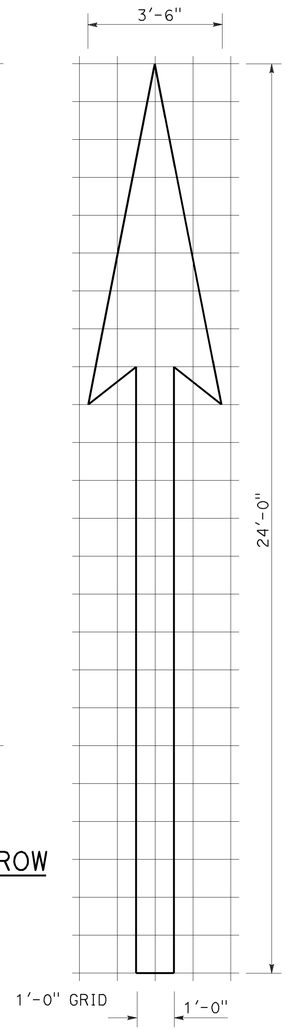

A=31 ft^2

TYPE I 24'-0" ARROW

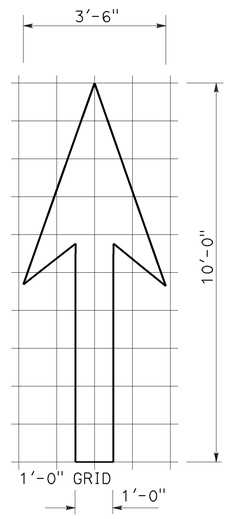

A=14 ft^2

TYPE I 10'-0" ARROW

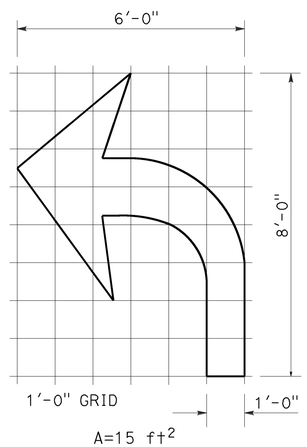

A=15 ft^2

TYPE IV (L) ARROW

(For Type IV (R) arrow, use mirror image)

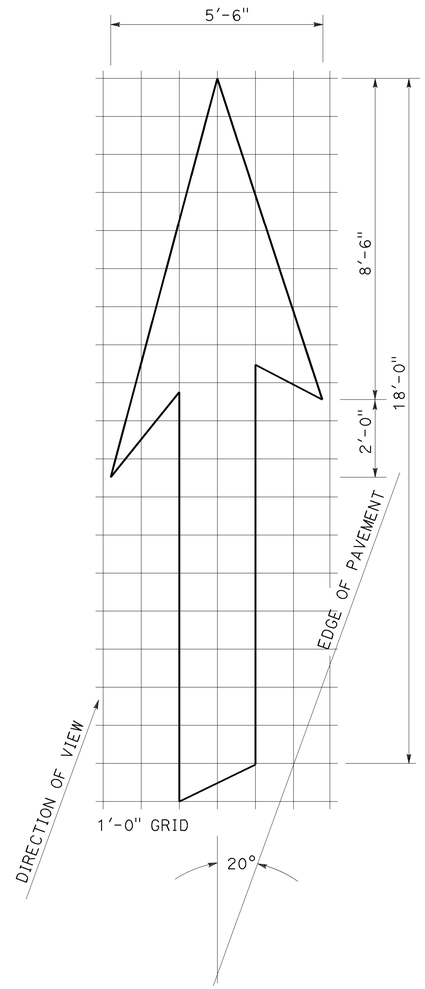

A=42 ft^2

TYPE VI ARROW

Right lane drop arrow
(For left lane, use mirror image)

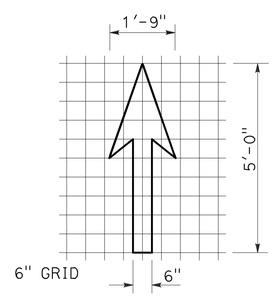

A=3.5 ft^2

BIKE LANE ARROW

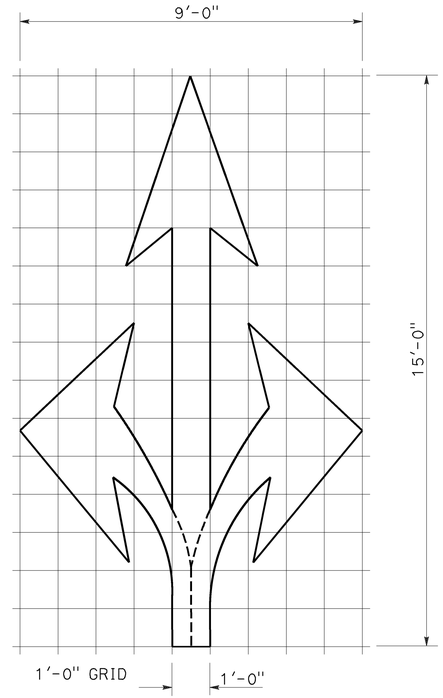

A=36 ft^2

TYPE VIII ARROW

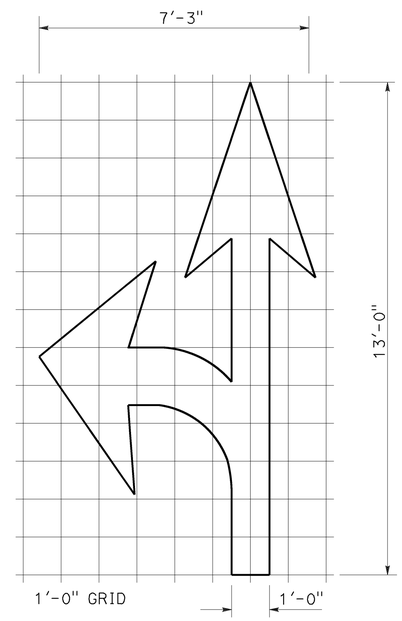

A=27 ft^2

TYPE VII (L) ARROW

(For Type VII (R) arrow, use mirror image)

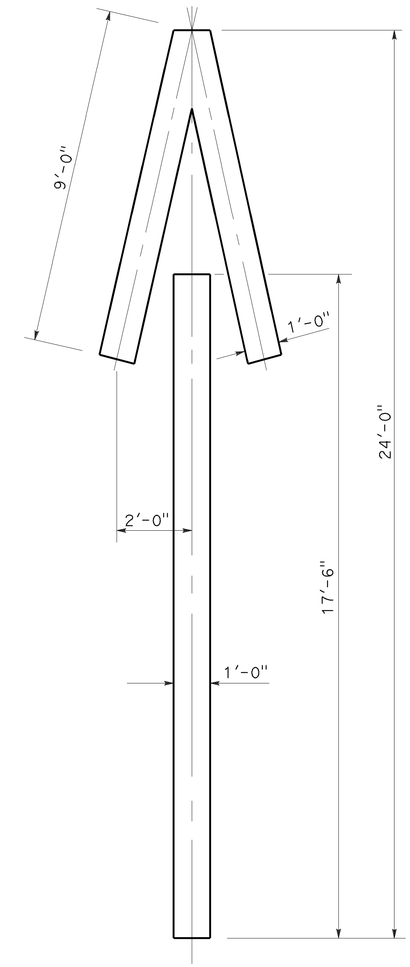

A=33 ft^2

TYPE V ARROW

NOTE:
Minor variations in dimensions may be accepted by the Engineer.

STATE OF CALIFORNIA
DEPARTMENT OF TRANSPORTATION

PAVEMENT MARKINGS ARROWS

NO SCALE

RSP A24A DATED APRIL 20, 2012 SUPERSEDES STANDARD PLAN A24A DATED MAY 20, 2011 - PAGE 13 OF THE STANDARD PLANS BOOK DATED 2010.

REVISED STANDARD PLAN RSP A24A

2010 REVISED STANDARD PLAN RSP A24A

3-14-12

Dist	COUNTY	ROUTE	POST MILES TOTAL PROJECT	SHEET No.	TOTAL SHEETS
04	Ala	580	41.5	80	123

REGISTERED CIVIL ENGINEER

July 20, 2012
PLANS APPROVAL DATE

REGISTERED PROFESSIONAL ENGINEER
Roberta L. McLaughlin
No. C40375
Exp. 3-31-13
CIVIL
STATE OF CALIFORNIA

THE STATE OF CALIFORNIA OR ITS OFFICERS OR AGENTS SHALL NOT BE RESPONSIBLE FOR THE ACCURACY OR COMPLETENESS OF SCANNED COPIES OF THIS PLAN SHEET.

TO ACCOMPANY PLANS DATED 6-7-16

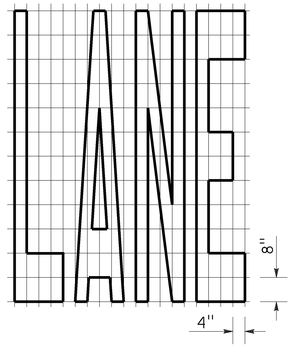

A=24 ft^2

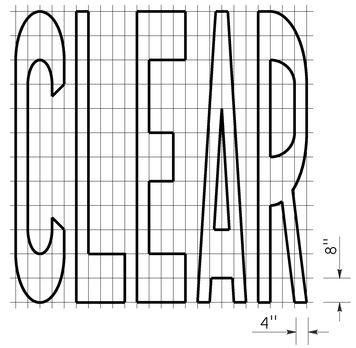

A=27 ft^2

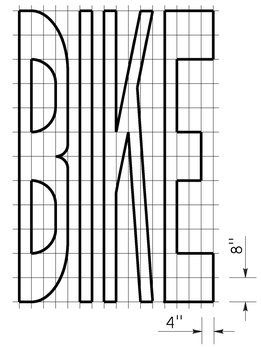

A=21 ft^2

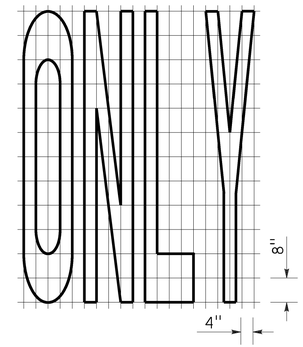

A=22 ft^2

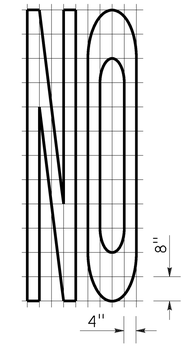

A=14 ft^2

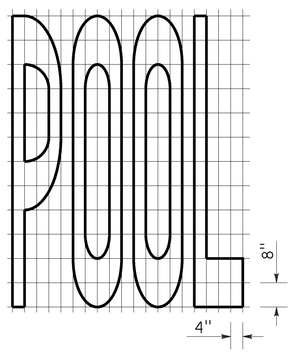

A=23 ft^2

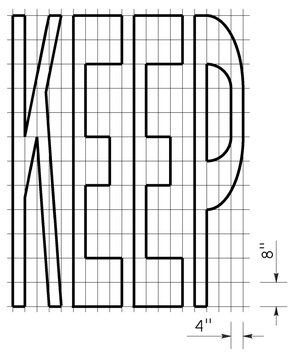

A=24 ft^2

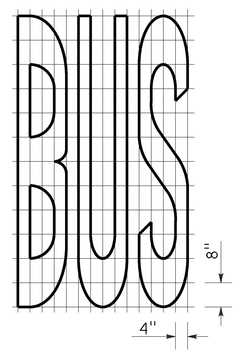

A=20 ft^2

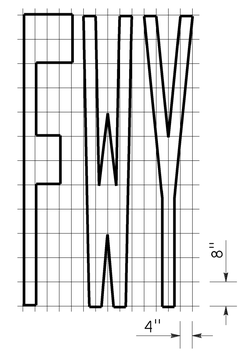

A=16 ft^2

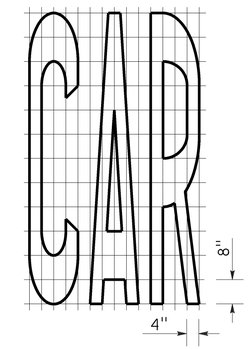

A=17 ft^2

WORD MARKINGS			
ITEM	ft^2	ITEM	ft^2
LANE	24	NO	14
POOL	23	BIKE	21
CAR	17	BUS	20
CLEAR	27	ONLY	22
KEEP	24	FWY	16

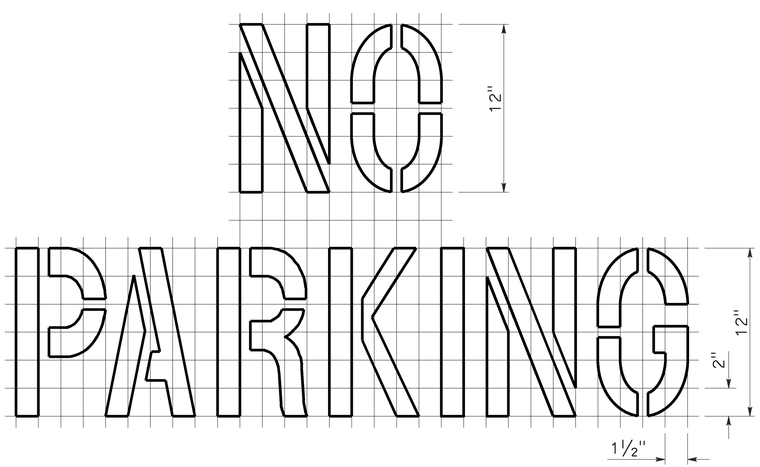

A=2 ft^2
See Notes 6 and 7

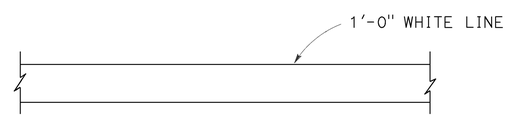

LIMIT LINE (STOP LINE)

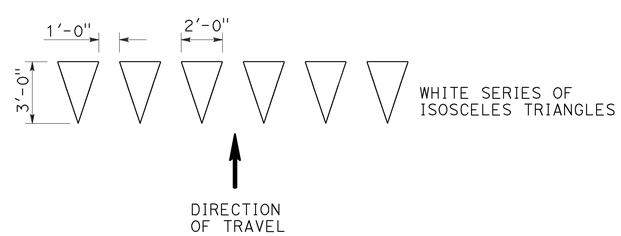

YIELD LINE

NOTES:

1. If a message consists of more than one word, it should read "UP", i.e., the first word should be nearest the driver.
2. The space between words should be at least four times the height of the characters for low speed roads, but not more than ten times the height of the characters. The space may be reduced appropriately where there is limited space because of local conditions.
3. Minor variations in dimensions may be accepted by the Engineer.
4. Portions of a letter, number or symbol may be separated by connecting segments not to exceed 2" in width.
5. The words "NO PARKING" pavement marking is to be used for parking facilities. For typical locations of markings, see Standard Plans A90A and A90B.
6. The words "NO PARKING", shall be painted in white letters no less than 1'-0" high on a contrasting background and located so that it is visible to traffic enforcement officials.

STATE OF CALIFORNIA
DEPARTMENT OF TRANSPORTATION

PAVEMENT MARKINGS WORDS, LIMIT AND YIELD LINES

NO SCALE

RSP A24E DATED JULY 20, 2012 SUPERSEDES STANDARD PLAN A24E
DATED MAY 20, 2011 - PAGE 17 OF THE STANDARD PLANS BOOK DATED 2010.

REVISED STANDARD PLAN RSP A24E

2010 REVISED STANDARD PLAN RSP A24E

6-12-12

Dist	COUNTY	ROUTE	POST MILES TOTAL PROJECT	SHEET No.	TOTAL SHEETS
04	Ala	580	41.5	81	123

REGISTERED CIVIL ENGINEER

July 20, 2012
PLANS APPROVAL DATE

REGISTERED PROFESSIONAL ENGINEER
Roberta L. McLaughlin
No. C40375
Exp. 3-31-13
CIVIL
STATE OF CALIFORNIA

THE STATE OF CALIFORNIA OR ITS OFFICERS OR AGENTS SHALL NOT BE RESPONSIBLE FOR THE ACCURACY OR COMPLETENESS OF SCANNED COPIES OF THIS PLAN SHEET.

TO ACCOMPANY PLANS DATED 6-7-16

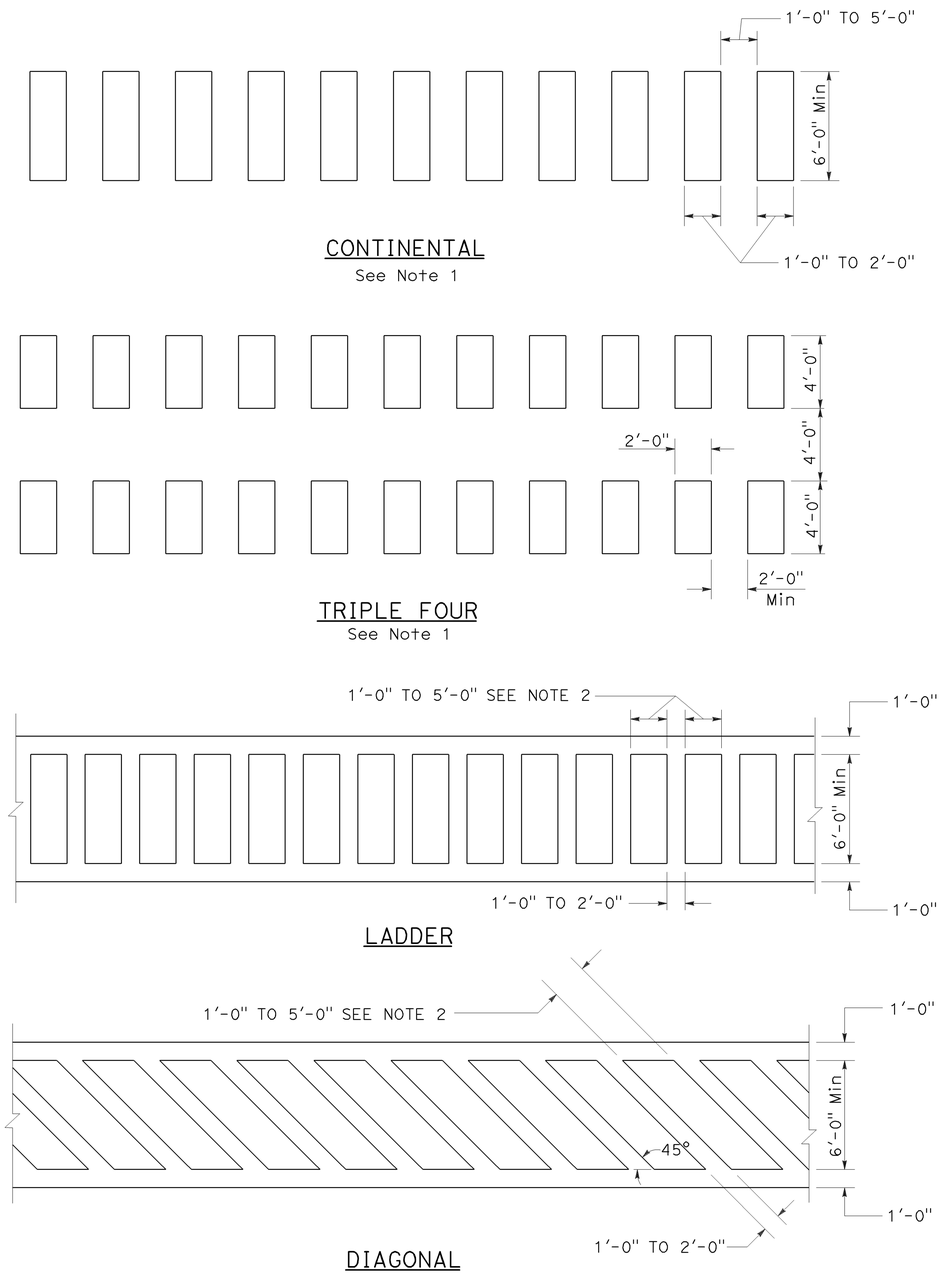

HIGHER VISIBILITY CROSSWALKS

NOTES:

1. Spaces between markings should be placed in wheel tracks of each lane.
2. Spacings not to exceed 2.5 times width of longitudinal line.
3. All crosswalk markings must be white except for those near schools must be yellow.

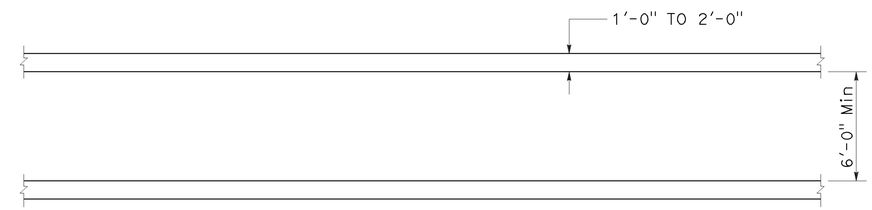

BASIC

STATE OF CALIFORNIA
DEPARTMENT OF TRANSPORTATION

PAVEMENT MARKINGS CROSSWALKS

NO SCALE

RSP A24F DATED JULY 20, 2012 SUPPLEMENTS THE STANDARD PLANS BOOK DATED 2010.

REVISED STANDARD PLAN RSP A24F

2010 REVISED STANDARD PLAN RSP A24F

6-28-12

Dist	COUNTY	ROUTE	POST MILES TOTAL PROJECT	SHEET No.	TOTAL SHEETS
04	Ala	580	41.5	82	123

REGISTERED CIVIL ENGINEER

October 30, 2015
PLANS APPROVAL DATE

REGISTERED PROFESSIONAL ENGINEER
Carl M. Duan
No. C59976
Exp. 6-30-16
CIVIL
STATE OF CALIFORNIA

THE STATE OF CALIFORNIA OR ITS OFFICERS OR AGENTS SHALL NOT BE RESPONSIBLE FOR THE ACCURACY OR COMPLETENESS OF SCANNED COPIES OF THIS PLAN SHEET.

TO ACCOMPANY PLANS DATED 6-7-16

2010 REVISED STANDARD PLAN RSP A62F

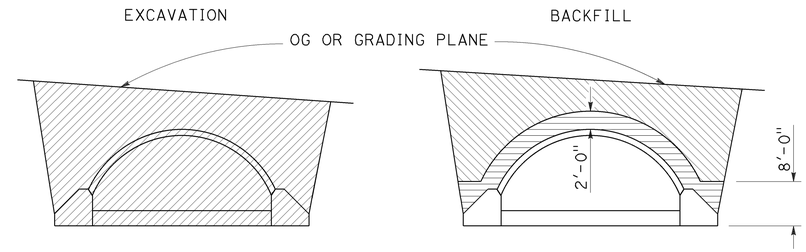

IN TRENCH

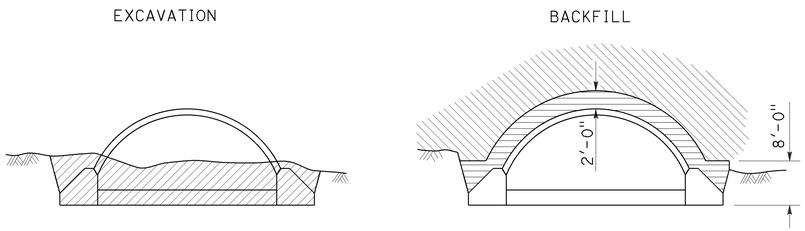

IN EMBANKMENT

STRUCTURAL STEEL PLATE ARCHES

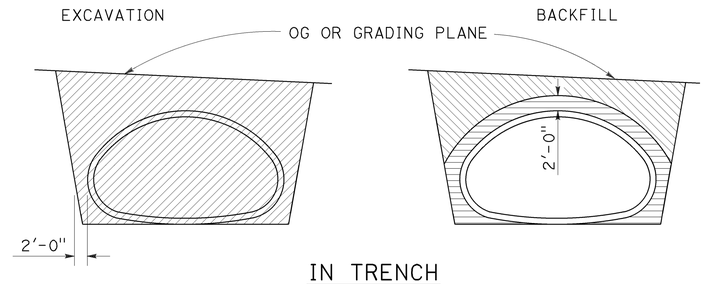

IN TRENCH

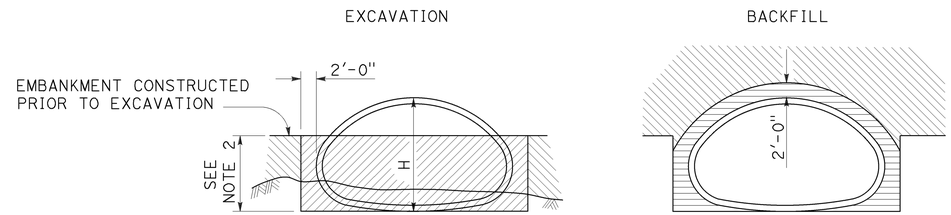

IN EMBANKMENT

STRUCTURAL STEEL PLATE PIPE ARCHES AND VEHICULAR UNDERCROSSING

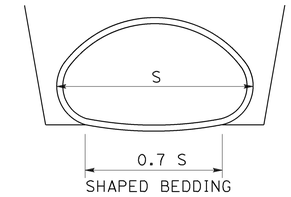

SHAPED BEDDING

S = Larger than 84"

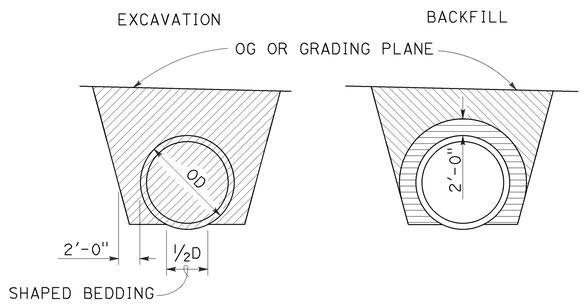

IN TRENCH

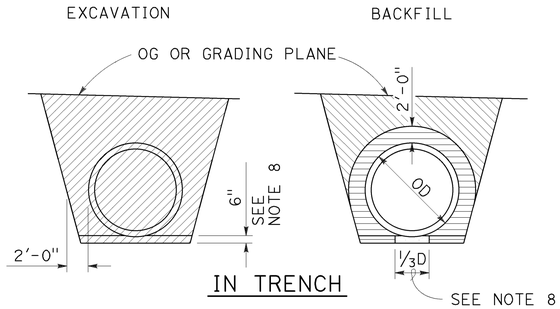

IN TRENCH

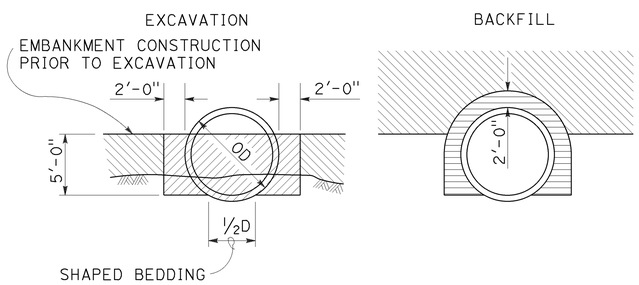

IN EMBANKMENT

PIPES

Larger than 84"

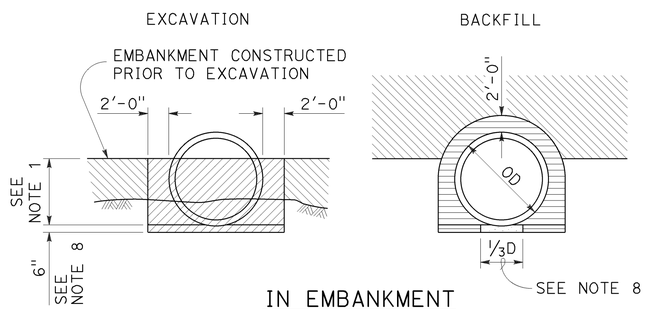

IN EMBANKMENT

METAL AND PLASTIC PIPES AND CORRUGATED METAL PIPE ARCHES

84" or Smaller

NOTES:

1. PIPES: 30" minimum for diameters up to and including 42" then ⅔ diameter but no more than 60" required. CORRUGATED METAL PIPE ARCHES: 30" maximum.
2. ⅔ H up to 60" maximum.
3. Slope or shore excavation sides as necessary.
4. Backfill shall be placed full width of excavation except as noted.
5. Diagrams do not apply to overside drains.
6. Dimensions shown are minimum.
7. Construction strutting of structural steel plate pipe, arches and vehicular undercrossing to be used when shown on the project plans. When shown, see Standard Plan D88A for strutting requirements.
8. Excavation below pipe and 80% relative compaction requirements for plastic pipes only.
9. D is the inside diameter (ID) of the pipe.

LEGEND

- STRUCTURE EXCAVATION (CULVERT)
- ROADWAY EMBANKMENT
- STRUCTURE BACKFILL (CULVERT) 95% RELATIVE COMPACTION
- STRUCTURE BACKFILL (CULVERT) 80% RELATIVE COMPACTION

STATE OF CALIFORNIA
DEPARTMENT OF TRANSPORTATION

EXCAVATION AND BACKFILL METAL AND PLASTIC CULVERTS

NO SCALE

RSP A62F DATED OCTOBER 30, 2015 SUPERSEDES STANDARD PLAN A62F DATED MAY 20, 2011 - PAGE 26 OF THE STANDARD PLANS BOOK DATED 2010.

REVISED STANDARD PLAN RSP A62F

10-13-15

Dist	COUNTY	ROUTE	POST MILES TOTAL PROJECT	SHEET No.	TOTAL SHEETS
04	Ala	580	41.5	83	123

REGISTERED CIVIL ENGINEER

July 18, 2014
PLANS APPROVAL DATE

Glenn DeCou
No. C34547
Exp. 9-30-15
CIVIL
STATE OF CALIFORNIA
REGISTERED PROFESSIONAL ENGINEER

THE STATE OF CALIFORNIA OR ITS OFFICERS OR AGENTS SHALL NOT BE RESPONSIBLE FOR THE ACCURACY OR COMPLETENESS OF SCANNED COPIES OF THIS PLAN SHEET.

TO ACCOMPANY PLANS DATED 6-7-16

2010 REVISED STANDARD PLAN RSP A85

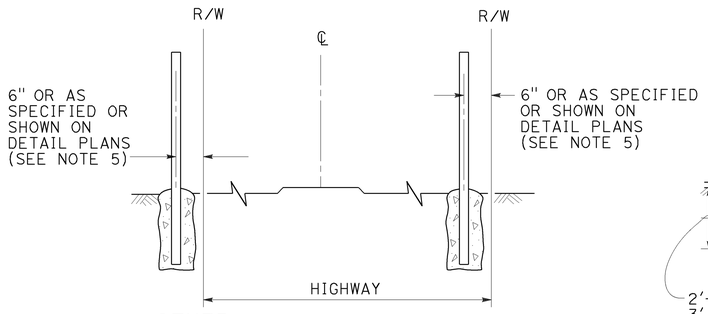

FENCE LOCATION

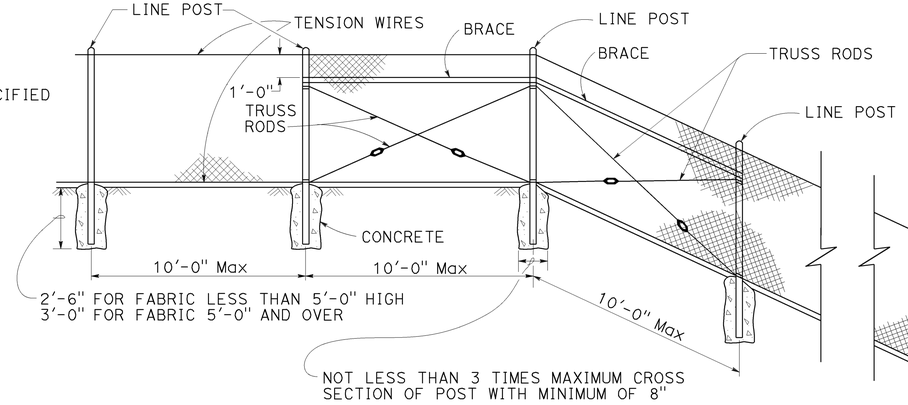

CHAIN LINK FENCE ON SHARP BREAK IN GRADE

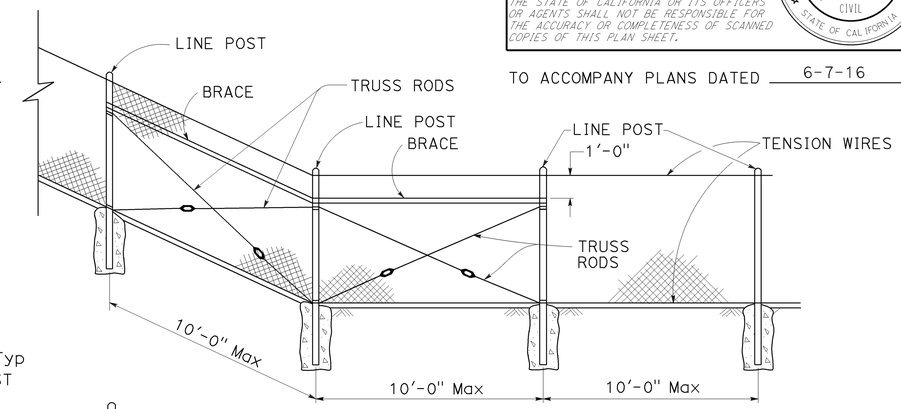

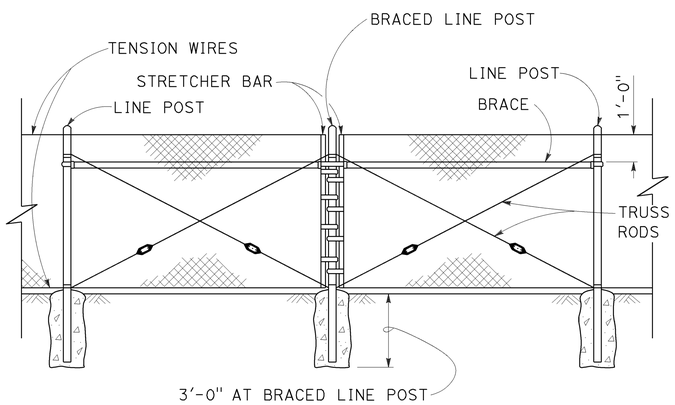

BRACED LINE POST INSTALLATION

Braced line post at intervals not exceeding 1000'

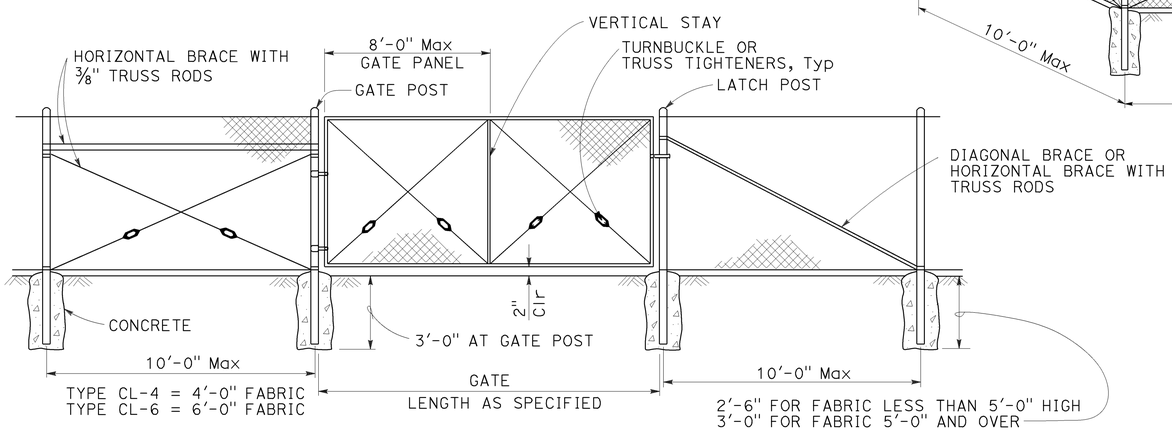

CHAIN LINK GATE INSTALLATION

GATE POST			
FENCE HEIGHT	GATE WIDTHS	ROUND OD PIPE	WEIGHT (lb/ft)
6'-0" AND LESS	UP THRU 6'-0"	2.875"	5.80
	OVER 6'-0" THRU 12'-0"	4.500"	10.80
	OVER 12'-0" THRU 18'-0"	5.563"	14.63
	OVER 18'-0" TO 24'-0" Max	6.625"	18.99
OVER 6'-0" TO 8'-0" Max	UP THRU 6'-0"	3.500"	7.58
	OVER 6'-0" THRU 12'-0"	5.563"	14.63
	OVER 12'-0" THRU 18'-0"	6.625"	18.99
	OVER 18'-0" TO 24'-0" Max	8.625"	28.58

Above post dimensions and weights are minimums. Larger sizes may be used upon approval.

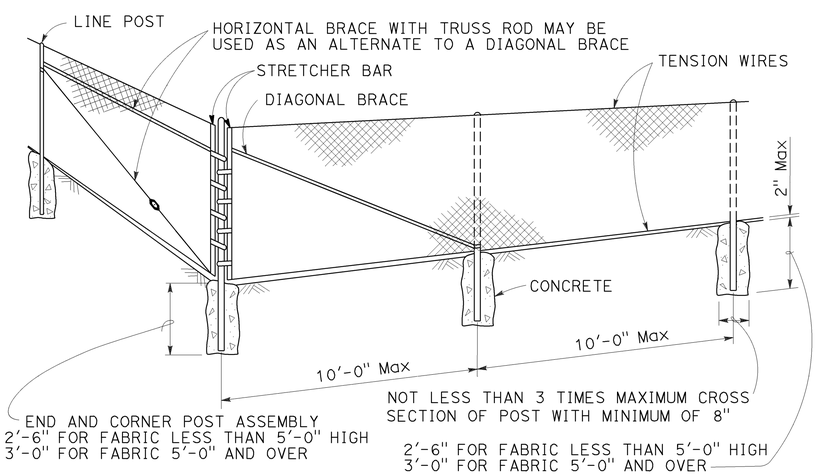

CORNER POST

NOTES:

1. The table below shows minimum sized posts and braces complying with the specifications. Larger or heavier post and brace sizes may be used upon approval.
2. Sections shown in the tables must also comply with the strength requirements and other provisions of the Specifications.
3. Other sections which comply with the strength requirements and other provisions of the Specifications may be used upon approval.
4. Options exercised shall be uniform on any one project.
5. Offset to be 2'-0" at monument locations, measured at right angles to R/W lines. Taper to achieve offset to be at least 20'-0" long.
6. See Revised Standard Plan RSP A85B for Brace, Stretcher Bar, and Truss Tightener Details.

TYPICAL MEMBER DIMENSIONS (See Notes)										
FENCE HEIGHT	LINE POSTS				END, LATCH AND CORNER POSTS		BRACES			
	ROUND OD PIPE	WEIGHT (lb/ft)	ROLL FORMED SECTION	ROLL FORMED WEIGHT (lb/ft)	ROUND OD PIPE	WEIGHT (lb/ft)	ROUND OD PIPE	WEIGHT (lb/ft)	ROLL FORMED SECTION	ROLL FORMED WEIGHT (lb/ft)
6'-0" AND LESS	1.900"	2.72	1.875" x 1.625"	1.85	2.375"	3.65	1.66"	2.27	1.625" x 1.25"	1.35
OVER 6'-0" TO 8'-0" Max	2.375"	3.65	2.25" x 1.70"	2.78	2.875"	5.80	1.66"	2.27	1.625" x 1.25"	1.35

STATE OF CALIFORNIA
DEPARTMENT OF TRANSPORTATION

CHAIN LINK FENCE

NO SCALE

RSP A85 DATED JULY 18, 2014 SUPERSEDES STANDARD PLAN A85
DATED MAY 20, 2011 - PAGE 112 OF THE STANDARD PLANS BOOK DATED 2010.

REVISED STANDARD PLAN RSP A85

7-1-14

Dist	COUNTY	ROUTE	POST MILES TOTAL PROJECT	SHEET No.	TOTAL SHEETS
04	Ala	580	41.5	84	123

REGISTERED CIVIL ENGINEER

July 15, 2016
PLANS APPROVAL DATE

REGISTERED PROFESSIONAL ENGINEER Sukhdeep Singh Sandher No. C74893 Exp. 12-31-17 CIVIL STATE OF CALIFORNIA

THE STATE OF CALIFORNIA OR ITS OFFICERS OR AGENTS SHALL NOT BE RESPONSIBLE FOR THE ACCURACY OR COMPLETENESS OF SCANNED COPIES OF THIS PLAN SHEET.

TO ACCOMPANY PLANS DATED 6-7-16

2010 REVISED STANDARD PLAN RSP A85A

NOTES:

1. B is not less than 3 times maximum cross section of post with minimum of 8".
2. See Revised Standard Plan RSP A85 for Chain Link Fencing dimensions.
3. See Detail A on Standard Plan A86B for connection at headwall.
4. See Detail D on Standard Plan A86B for connection at headwall.

CENTER POST		
FENCE HEIGHT (Max)	SLATTED	P
ALL HEIGHTS	NO	1'-6"
5'-0"	YES	3'-0"
6'-0"	YES	3'-0"
8'-0"	YES	3'-6"
10'-0"	YES	4'-0"

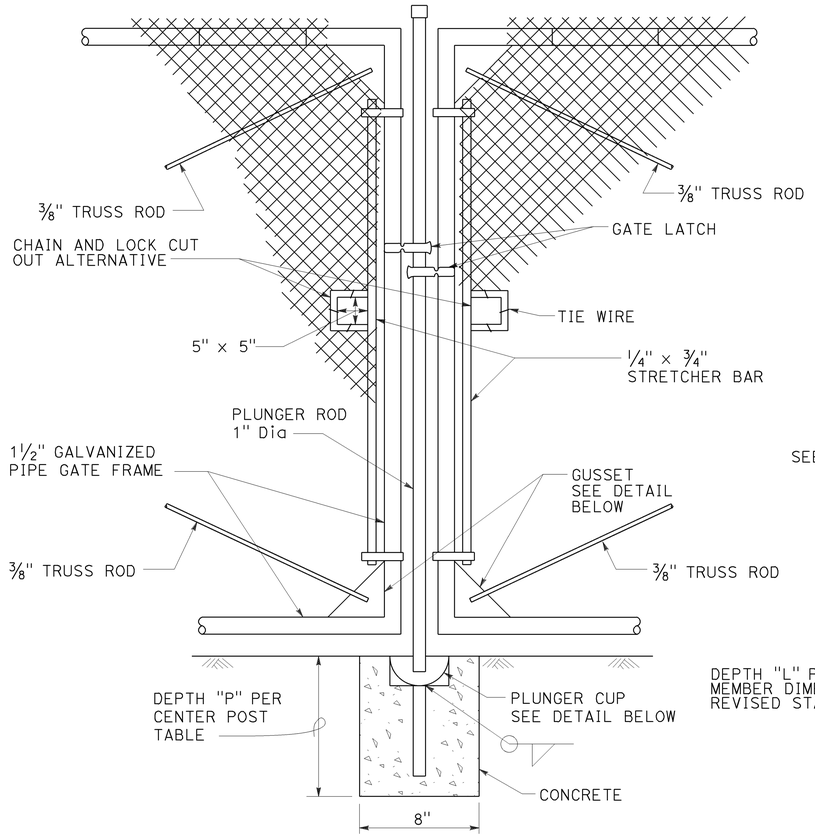

DOUBLE GATE
REMOVABLE CENTER POST

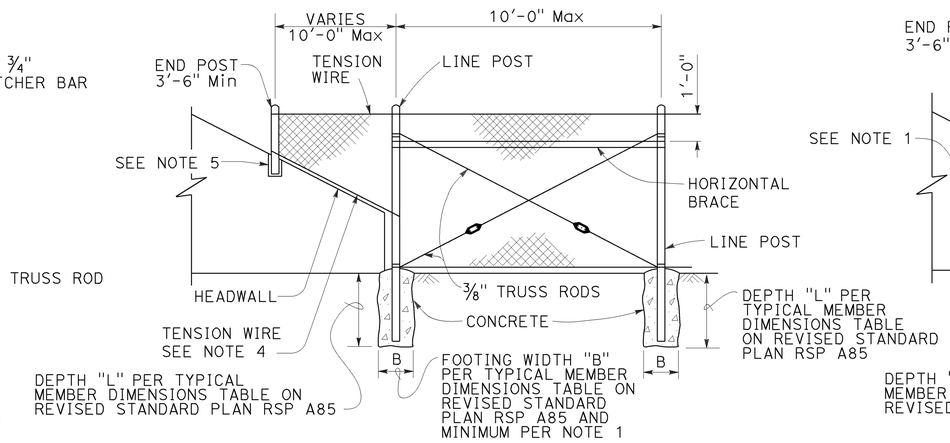

METHOD OF TYING FENCE TO HEADWALL

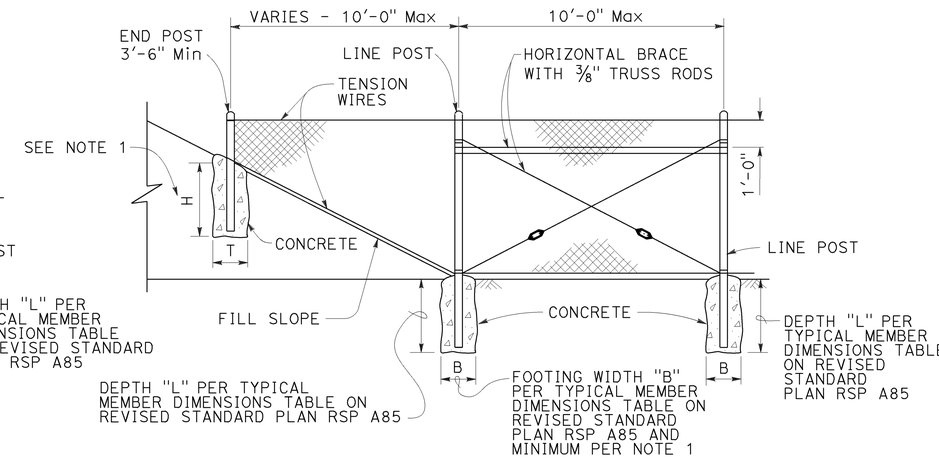

METHOD OF ERECTING FENCE FOR FILL SLOPE

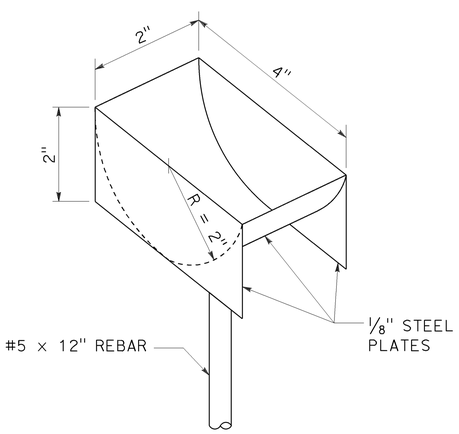

PLUNGER CUP DETAIL

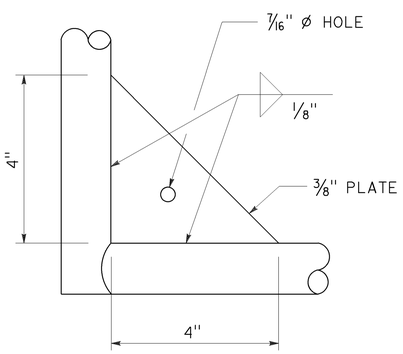

GUSSET DETAIL

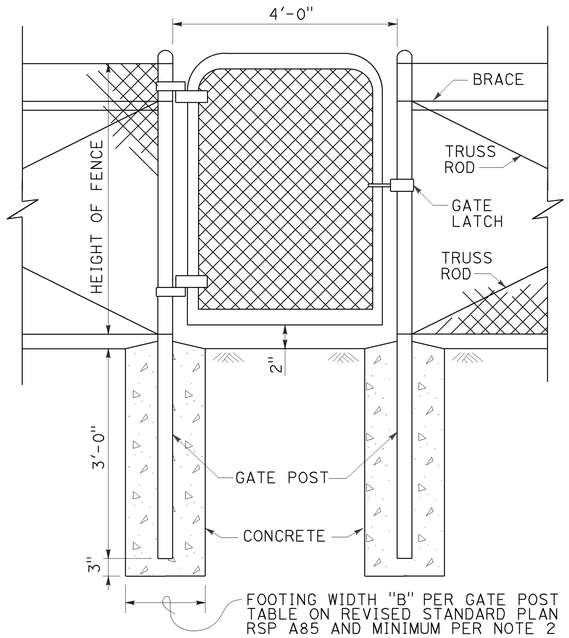

WALK GATE

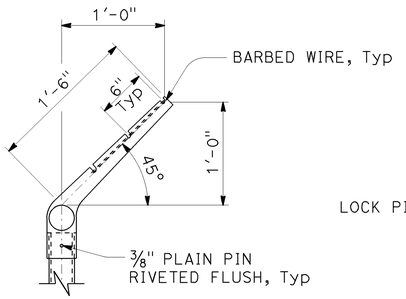

LINE POST

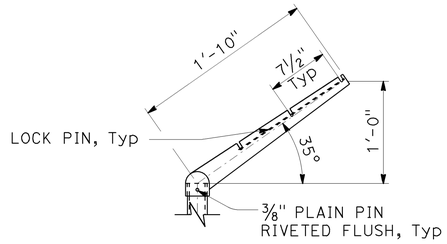

CORNER POST

BARBED WIRE POST TOP

STATE OF CALIFORNIA
DEPARTMENT OF TRANSPORTATION

CHAIN LINK FENCE DETAILS

NO SCALE

RSP A85A DATED JULY 15, 2016 SUPERSEDES STANDARD PLAN A85A
DATED MAY 20, 2011 - PAGE 113 OF THE STANDARD PLANS BOOK DATED 2010.

REVISED STANDARD PLAN RSP A85A

6-16-16

Dist	COUNTY	ROUTE	POST MILES TOTAL PROJECT	SHEET No.	TOTAL SHEETS
04	Ala	580	41.5	85	123

Glenn DeCou
REGISTERED CIVIL ENGINEER

October 19, 2012
PLANS APPROVAL DATE

REGISTERED PROFESSIONAL ENGINEER
Glenn DeCou
No. C34547
Exp. 9-30-13
CIVIL
STATE OF CALIFORNIA

THE STATE OF CALIFORNIA OR ITS OFFICERS OR AGENTS SHALL NOT BE RESPONSIBLE FOR THE ACCURACY OR COMPLETENESS OF SCANNED COPIES OF THIS PLAN SHEET.

TO ACCOMPANY PLANS DATED 6-7-16

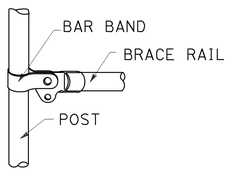

BRACE RAIL

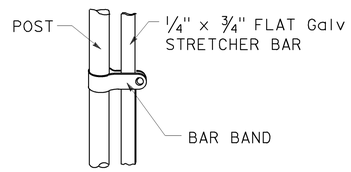

STRETCHER BAR

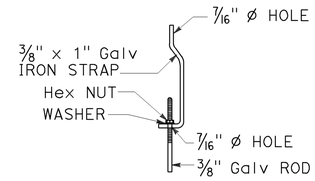

TRUSS TIGHTENER

NOTES:

1. All material for abutment connection to be galvanized.
2. The chain link fabric shall be replaced by barbed wire strands at 12" maximum centers between the double posts.
3. When the width of the culvert makes it necessary to anchor a post to the top of the culvert, a cast iron shoe or other device approved by the Engineer shall be used.
4. Fencing over stream and around headwall may also use Barbed Wire or Wire Mesh fencing with either wood post or steel post installation.
5. See Standard Plan A85 for Chain Link fence dimensions. See Standard Plan A86 for Barbed Wire and Wire Mesh fence dimensions and for wood post and steel post installation.

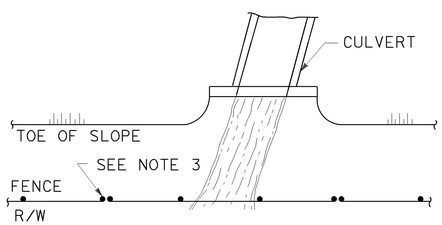

PLAN

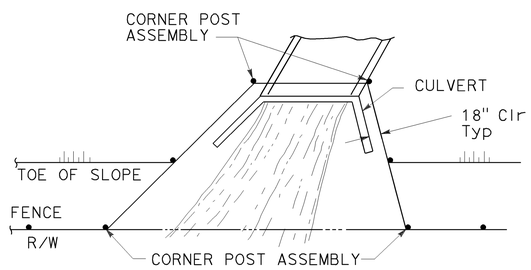

PLAN

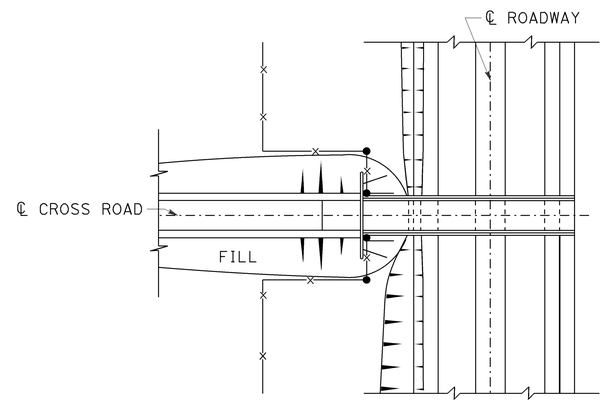

PLAN OF ROADWAY - OVERCROSSING

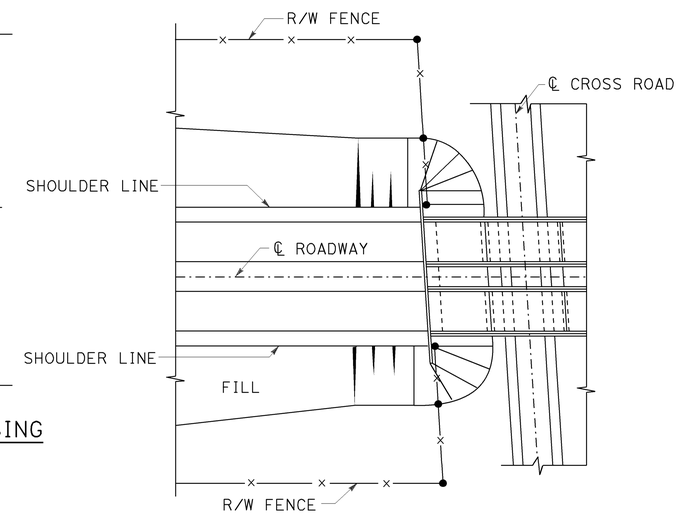

PLAN OF ROADWAY - UNDERCROSSING

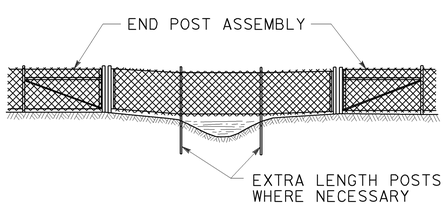

ELEVATION

INSTALLATION OVER STREAM

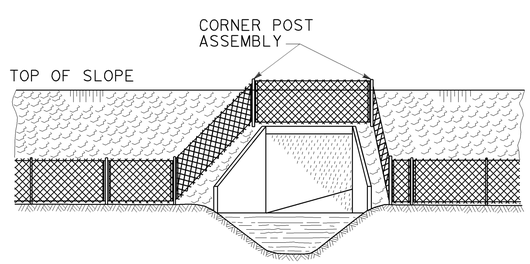

ELEVATION

INSTALLATION AROUND HEADWALL

See Note 4

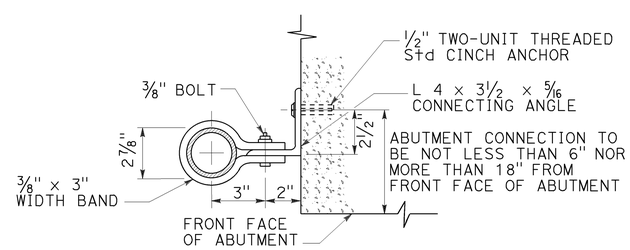

ABUTMENT CONNECTION

TYPICAL INSTALLATION AT BRIDGES

STATE OF CALIFORNIA
DEPARTMENT OF TRANSPORTATION

CHAIN LINK FENCE DETAILS

NO SCALE

RSP A85B DATED OCTOBER 19, 2012 SUPERSEDES STANDARD PLAN A85B
DATED MAY 20, 2011 - PAGE 114 OF THE STANDARD PLANS BOOK DATED 2010.

REVISED STANDARD PLAN RSP A85B

2010 REVISED STANDARD PLAN RSP A85B

7-19-12

Dist	COUNTY	ROUTE	POST MILES TOTAL PROJECT	SHEET No.	TOTAL SHEETS
04	Ala	580	41.5	86	123

REGISTERED CIVIL ENGINEER

July 19, 2013
PLANS APPROVAL DATE

REGISTERED PROFESSIONAL ENGINEER
Michael Janzen
No. 44788
Exp. 03-31-14
CIVIL
STATE OF CALIFORNIA

THE STATE OF CALIFORNIA OR ITS OFFICERS OR AGENTS SHALL NOT BE RESPONSIBLE FOR THE ACCURACY OR COMPLETENESS OF SCANNED COPIES OF THIS PLAN SHEET.

TO ACCOMPANY PLANS DATED 6-7-16

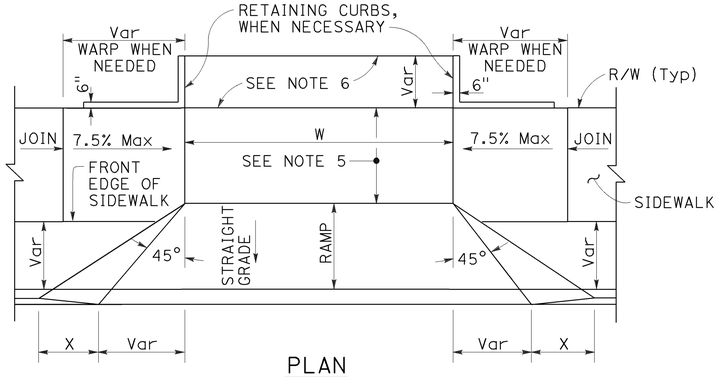

PLAN

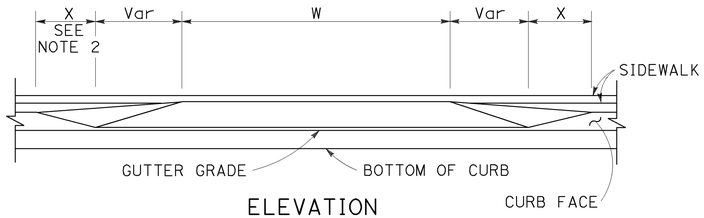

ELEVATION

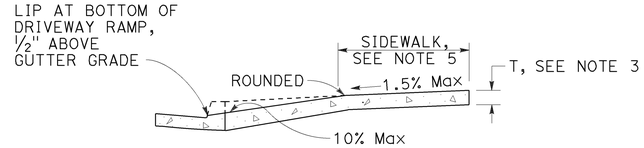

CASE A

Typical driveway, sidewalk not depressed

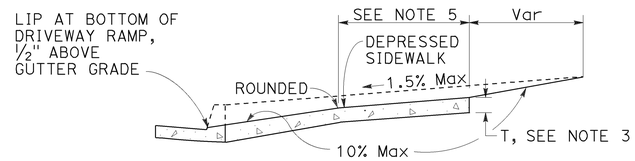

CASE B

Driveway with depressed sidewalk

SECTIONS

DRIVEWAYS

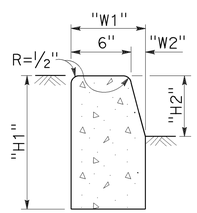

TYPE A1 CURBS

See Table A

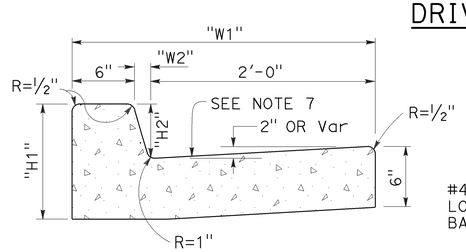

TYPE A2 CURBS

See Table A

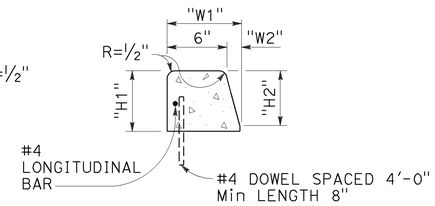

TYPE A3 CURBS

Superimposed on existing pavement
See Table A

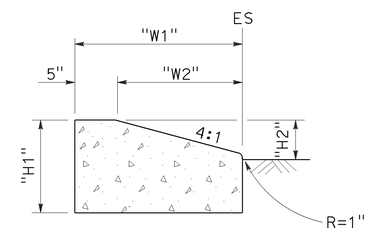

TYPE D CURBS

See Table A

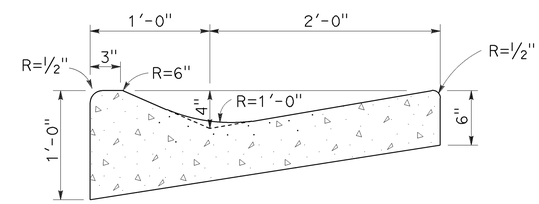

TYPE E CURB

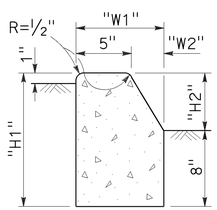

TYPE B1 CURBS

See Table A

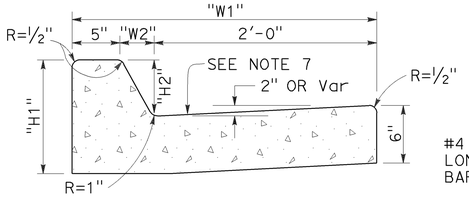

TYPE B2 CURBS

See Table A

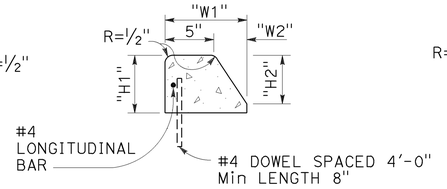

TYPE B3 CURBS

Superimposed on existing pavement
See Table A

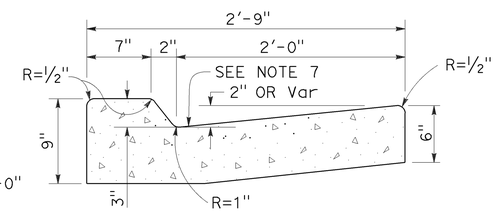

TYPE B4 CURBS

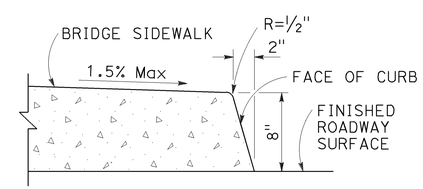

TYPE H CURB

On Bridges

CURBS

TABLE A

CURB TYPE	DIMENSIONS			
	"H1"	"H2"	"W1"	"W2"
A1-6	1'-2"	6"	7½"	1½"
A1-8	1'-4"	8"	8"	2"
A2-6	1'-0"	6"	2'-7½"	1½"
A2-8	1'-2"	8"	2'-8"	2"
A3-6	6"	5"	7¼"	1¼"
A3-8	8"	7"	7¾"	1¾"
B1-4	1'-0"	4"	7½"	2½"
B1-6	1'-2"	6"	9"	4"
B2-4	10"	4"	2'-7½"	2½"
B2-6	1'-0"	6"	2'-9"	4"
B3-4	4"	3"	7"	2"
B3-6	6"	5"	8½"	3½"
D-4	10"	4"	1'-6"	1'-1"
D-6	1'-0"	6"	2'-2"	1'-9"

CURB QUANTITIES

TYPE	CUBIC YARDS PER LINEAR FOOT
A1-6	0.02585
A1-8	0.03084
A2-6	0.05903
A2-8	0.06379
A3-6	0.01036
A3-8	0.01435
B1-4	0.02185
B1-6	0.02930
B2-4	0.05515
B2-6	0.06171
B3-4	0.00641
B3-6	0.01074
B4	0.05709
D-4	0.04083
D-6	0.06804
E	0.06661

NOTES:

1. Case A driveway section typically applies.
2. X=3'-0" except for curb heights over 10" where 4:1 slopes shall be used on curb slope.
3. Sidewalk and ramp thickness "T" at driveway shall be 4" for residental and 6" for commercial.
4. Difference in slope of the driveway ramp and the slope of a line between the gutter and a point on the roadway 5'-0" from gutter line shall not exceed 15%. Reduce driveway ramp slope, not gutter slope, where required.
5. Minimum width of clear passageway for sidewalk shall be 4'-2".
6. Retaining curbs and acquisition of construction easement may be necessary for narrow sidewalks or curb heights in excess of 6".
7. Across the pedestrian route at curb ramp locations, the gutter pan slope shall not exceed 1" of depth for each 2'-0" of width.

STATE OF CALIFORNIA
DEPARTMENT OF TRANSPORTATION

CURBS AND DRIVEWAYS

NO SCALE

RSP A87A DATED JULY 19, 2013 SUPERSEDES STANDARD PLAN A87A
DATED MAY 20, 2011 - PAGE 119 OF THE STANDARD PLANS BOOK DATED 2010.

REVISED STANDARD PLAN RSP A87A

2010 REVISED STANDARD PLAN RSP A87A

7-8-13

Dist	COUNTY	ROUTE	POST MILES TOTAL PROJECT	SHEET No.	TOTAL SHEETS
04	Ala	580	41.5	87	123

REGISTERED CIVIL ENGINEER

July 3, 2015
PLANS APPROVAL DATE

REGISTERED PROFESSIONAL ENGINEER Hector David Cordova No. C41957 Exp. 3-31-16 CIVIL STATE OF CALIFORNIA

THE STATE OF CALIFORNIA OR ITS OFFICERS OR AGENTS SHALL NOT BE RESPONSIBLE FOR THE ACCURACY OR COMPLETENESS OF SCANNED COPIES OF THIS PLAN SHEET.

TO ACCOMPANY PLANS DATED 6-7-16

2010 REVISED STANDARD PLAN RSP A88A

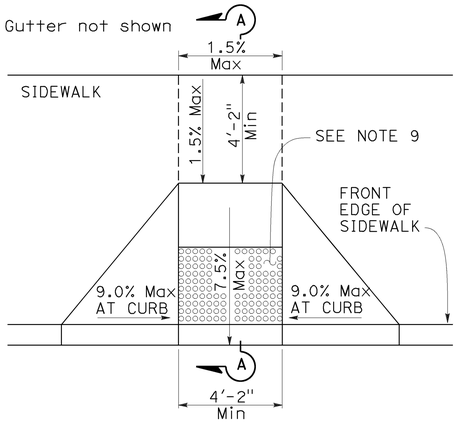

CASE A

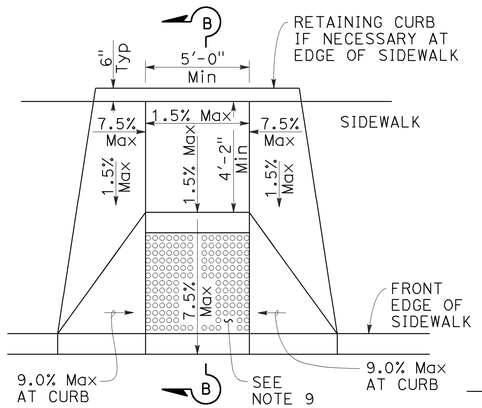

CASE B

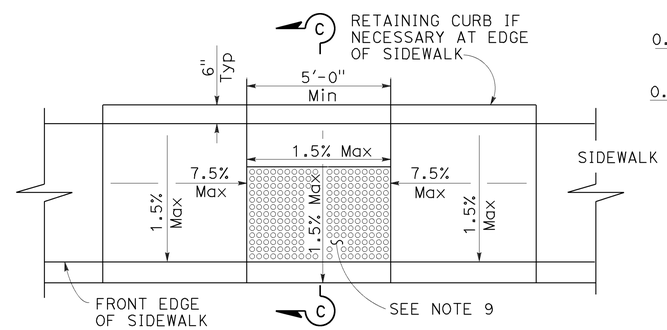

CASE C

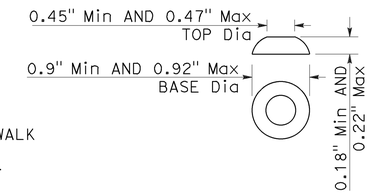

RAISED TRUNCATED DOME

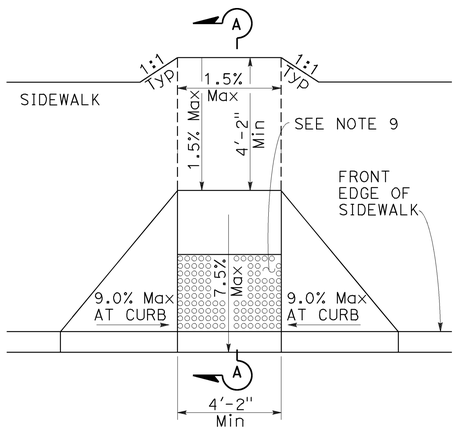

CASE D

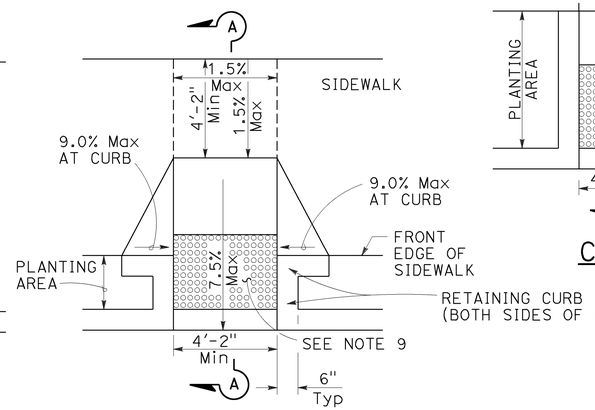

CASE E

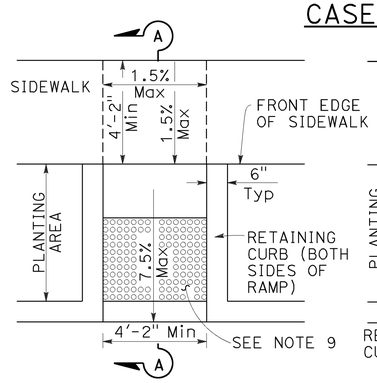

CASE F

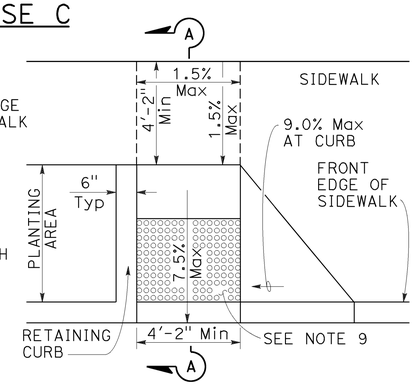

CASE G
See Note 4

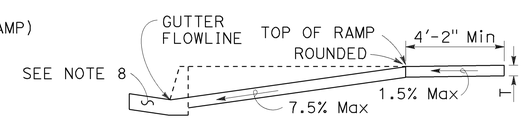

SECTION A-A

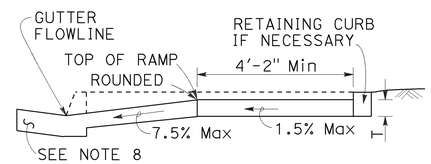

SECTION B-B
Depress entire sidewalk as required

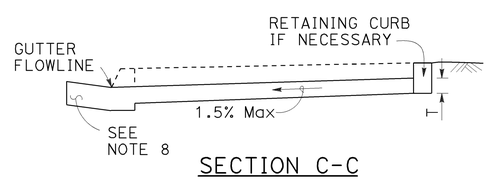

SECTION C-C

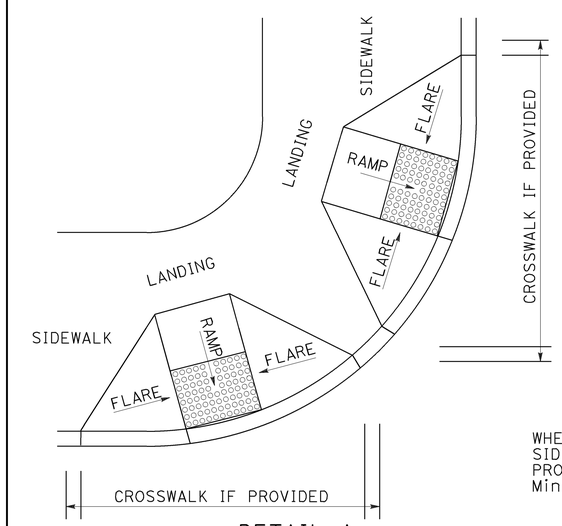

DETAIL A

TYPICAL TWO-RAMP CORNER INSTALLATION

See Note 1

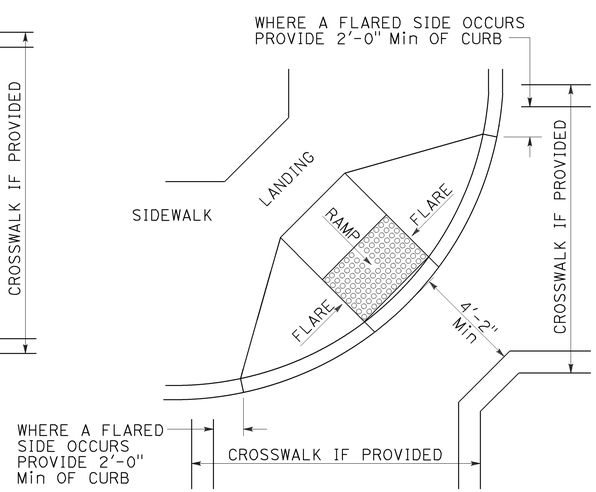

DETAIL B

TYPICAL ONE-RAMP CORNER INSTALLATION

See Notes 1 and 3

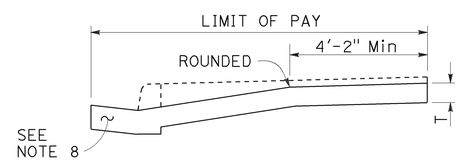

RETROFIT PAY LIMITS

Existing curb and sidewalk

NOTES:

1. As site conditions dictate, Case A through Case G curb ramps may be used for corner installations similar to those shown in Detail A and Detail B. The case of curb ramps used in Detail A do not have to be the same. Case A through Case G curb ramps also may be used at mid block locations, as site conditions dictate.
2. If distance from curb to back of sidewalk is too short to accommodate ramp and 4'-2" platform (landing) as shown in Case A, the sidewalk may be depressed longitudinally as in Case B, or C or may be widened as in Case D.
3. When ramp is located in center of curb return, crosswalk configuration must be similar to that shown for Detail B.
4. As site conditions dictate, the retaining curb side and the flared side of the Case G ramp shall be constructed in reversed position.
5. If located on a curve, the sides of the ramp need not be parallel, but the minimum width of the ramp shall be 4'-2".
6. Side slope of ramp flares vary uniformly from a maximum of 9.0% at curb to conform with longitudinal sidewalk slope adjacent to top of the ramp, except in Case C and Case F.
7. Transitions from ramps and landing to walks, gutters or streets shall be flush (no lip) and free of abrupt changes.
8. Counter slopes of adjoining gutters and road surfaces immediately adjacent to and within 24 inches of the curb ramp shall not be steeper than 1:20 (5.0%). Gutter pan slope shall not exceed 1" of depth for each 2'-0" of width.
9. Curb ramps shall have a detectable warning surface that extends the full width and 3'-0" depth of the ramp. A 4'-0" wide detectable warning surface may be used on a 4'-2" wide curb ramp. Detectable Warning Surfaces shall conform to the requirements in the Standard Specifications.
10. Sidewalk and ramp thickness, "T", shall be 3½" minimum.
11. Utility pull boxes, manholes, vaults and all other utility facilities within the boundaries of the curb ramp will be relocated or adjusted to grade by the owner prior to, or in conjunction with, curb ramp construction.
12. Detectable warning surface may have to be cut to allow removal of utility covers while maintaining full detectable warning width and depth.

RAISED TRUNCATED DOME PATTERN (IN-LINE)

DETECTABLE WARNING SURFACE

See Note 9

STATE OF CALIFORNIA
DEPARTMENT OF TRANSPORTATION

CURB RAMP DETAILS

NO SCALE

RSP A88A DATED JULY 3, 2015 SUPERSEDES RSP A88A DATED MARCH 21, 2014 AND RSP A88A DATED JULY 19, 2013 AND STANDARD PLAN A88A DATED MAY 20, 2011 - PAGE 121 OF THE STANDARD PLANS BOOK DATED 2010.

REVISED STANDARD PLAN RSP A88A

6-30-15

Dist	COUNTY	ROUTE	POST MILES TOTAL PROJECT	SHEET No.	TOTAL SHEETS
04	Ala	580	41.5	88	123

REGISTERED CIVIL ENGINEER

July 3, 2015
PLANS APPROVAL DATE

REGISTERED PROFESSIONAL ENGINEER
Hector David Cordova
No. C41957
Exp. 3-31-16
CIVIL
STATE OF CALIFORNIA

THE STATE OF CALIFORNIA OR ITS OFFICERS OR AGENTS SHALL NOT BE RESPONSIBLE FOR THE ACCURACY OR COMPLETENESS OF SCANNED COPIES OF THIS PLAN SHEET.

TO ACCOMPANY PLANS DATED 6-7-16

Gutter not shown

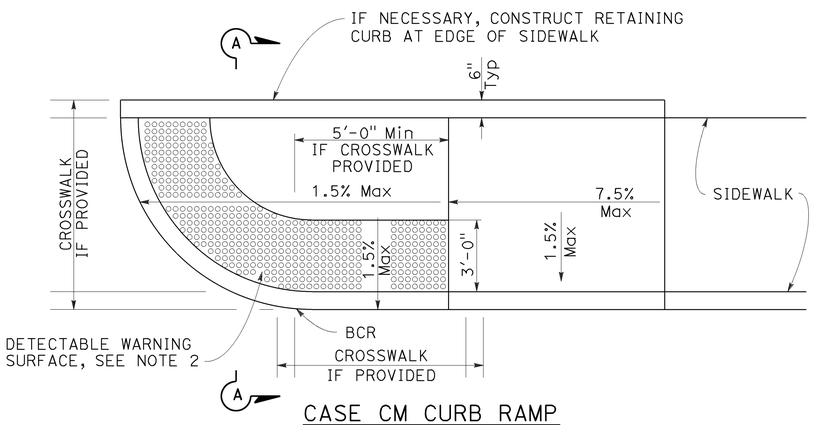

CASE CM CURB RAMP

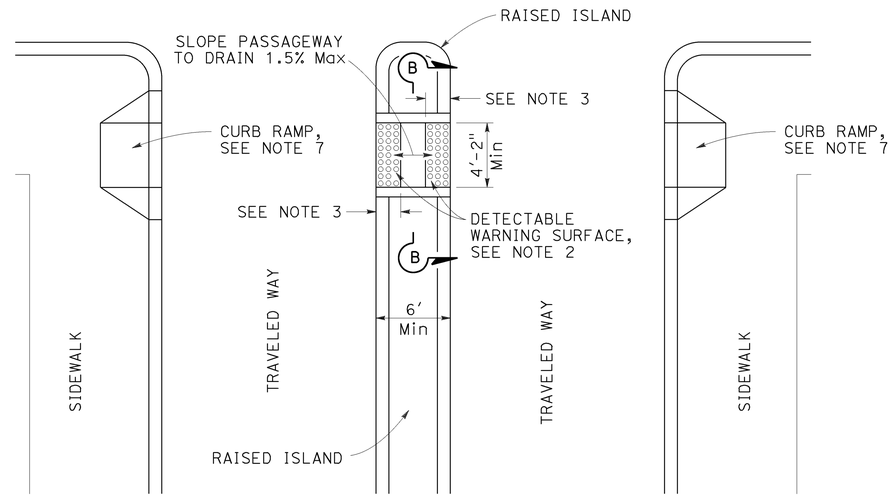

TYPE A PASSAGEWAY

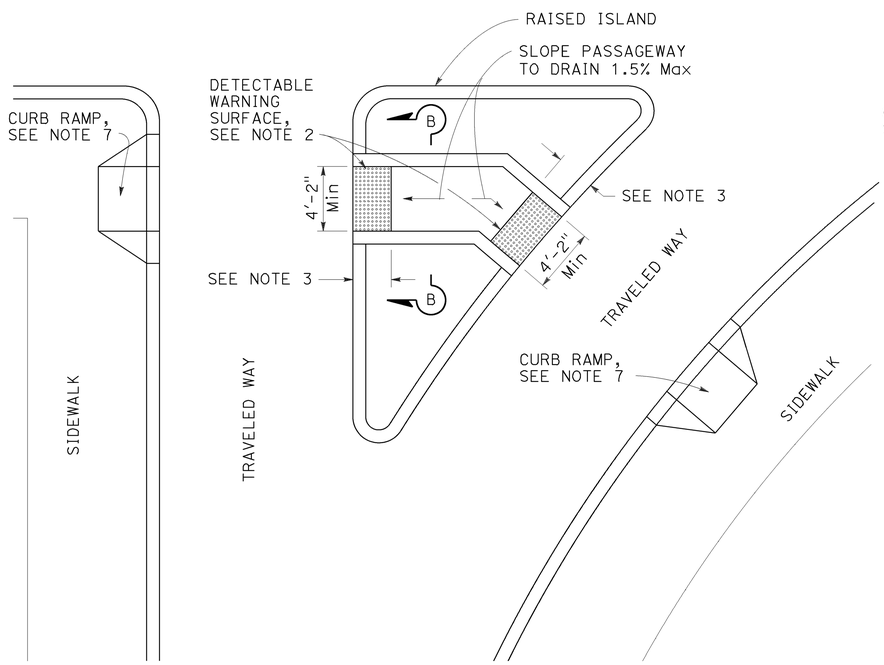

TYPE B PASSAGEWAY

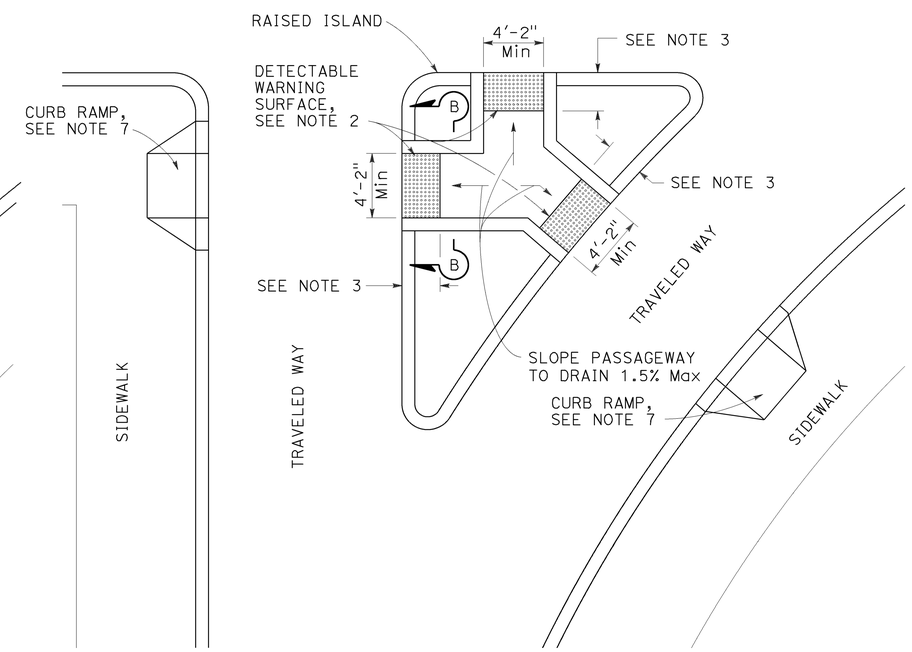

TYPE C PASSAGEWAY

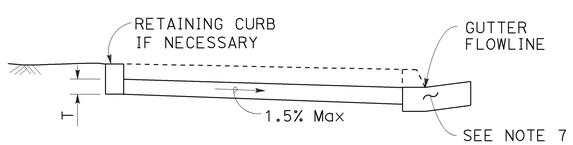

SECTION A-A

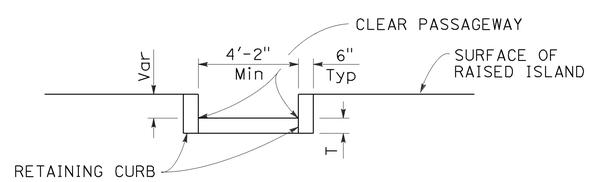

SECTION B-B

NOTES:

1. Sidewalk, ramp and passageway thickness, "T", shall be 3½" minimum.
2. For details of detectable warning surfaces, see Revised Standard Plan RSP A88A.
3. Where an island passageway length is greater than or equal to 6'-0", but less than 8'-0", each detectable warning surface shall extend the full width and 2'-0" depth of the passageway length. Where an island passageway length is greater than or equal to 8'-0", each detectable warning surface shall extend the full width and 3'-0" depth of the passageway length. A 4'-0" wide detectable warning surface may be used on a 4'-2" wide island passageway.
4. Transitions from ramps to walks, gutters or streets shall be flush (no lip) and free of abrupt changes.
5. Utility pull boxes, manholes, vaults and all other utility facilities within the boundaries of the curb ramp will be relocated or adjusted to grade by the owner prior to, or in conjunction with, curb ramp construction.
6. Detectable warning surface may have to be cut to allow removal of utility covers while maintaining full detectable warning width and depth.
7. For additional curb ramp details, see Revised Standard Plan RSP A88A.

STATE OF CALIFORNIA
DEPARTMENT OF TRANSPORTATION

CURB RAMP AND ISLAND PASSAGEWAY DETAILS

NO SCALE

RSP A88B DATED JULY 3, 2015 SUPERSEDES RSP A88B DATED MARCH 21, 2014 AND RSP A88B DATED JULY 19, 2013 AND STANDARD PLAN A88B DATED MAY 20, 2011 - PAGE 122 OF THE STANDARD PLANS BOOK DATED 2010.

REVISED STANDARD PLAN RSP A88B

2010 REVISED STANDARD PLAN RSP A88B

4-28-15

Dist	COUNTY	ROUTE	POST MILES TOTAL PROJECT	SHEET No.	TOTAL SHEETS
04	Ala	580	41.5	89	123

REGISTERED CIVIL ENGINEER

July 3, 2015
PLANS APPROVAL DATE

REGISTERED PROFESSIONAL ENGINEER Hector David Cordova No. C41957 Exp. 3-31-16 CIVIL STATE OF CALIFORNIA

THE STATE OF CALIFORNIA OR ITS OFFICERS OR AGENTS SHALL NOT BE RESPONSIBLE FOR THE ACCURACY OR COMPLETENESS OF SCANNED COPIES OF THIS PLAN SHEET.

TO ACCOMPANY PLANS DATED 6-7-16

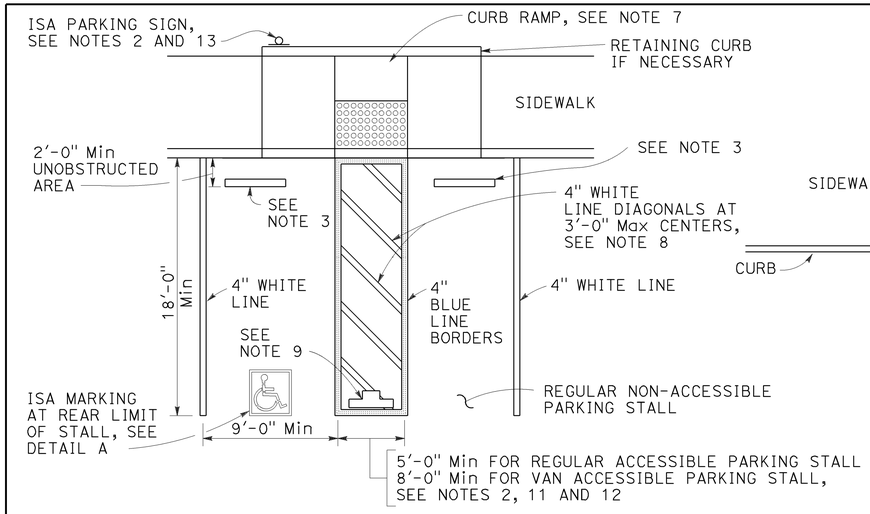

SINGLE PARKING STALL

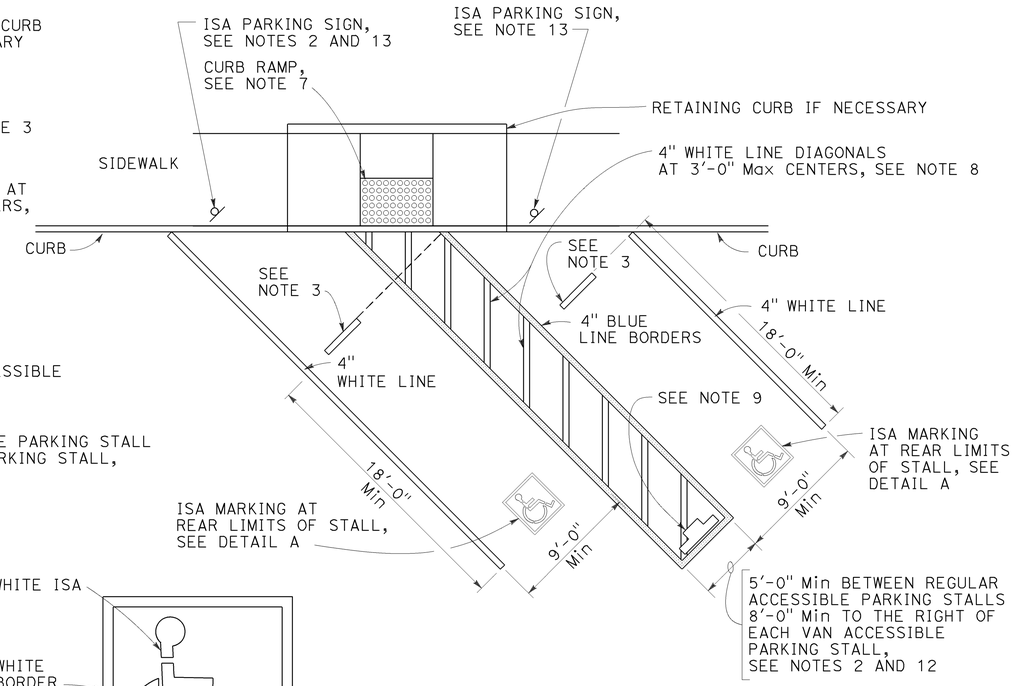

DIAGONAL DOUBLE PARKING STALLS

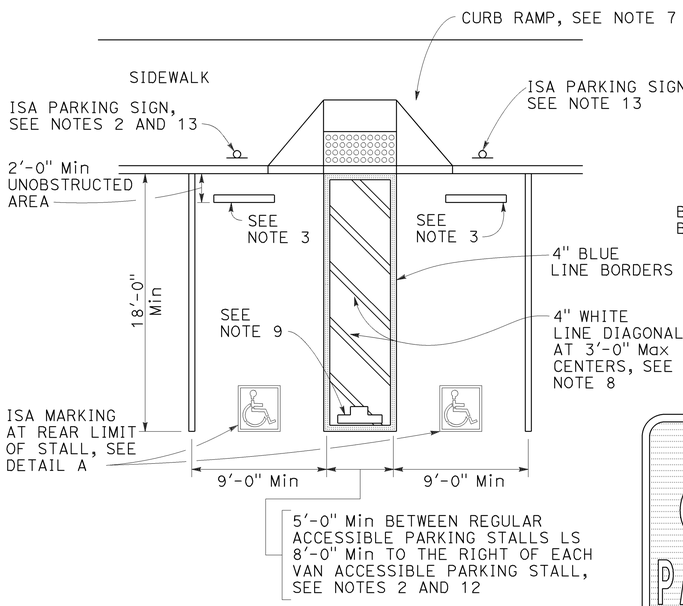

DOUBLE PARKING STALL

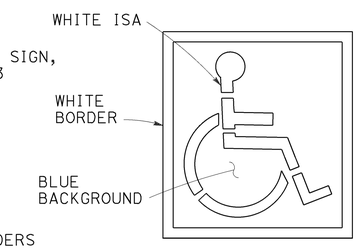

ISA MARKING
See Revised Std Plan RSP A24C

DETAIL A

TABLE A

TOTAL NUMBER OF PARKING SPACES PROVIDED IN PARKING FACILITY	MINIMUM NUMBER OF REQUIRED ACCESSIBLE PARKING SPACES
1-25	1
26-50	2
51-75	3
76-100	4
101-150	5
151-200	6
201-300	7
301-400	8
401-500	9
501-1000	2 PERCENT OF TOTAL
1001 AND OVER	20 PLUS 1 FOR EACH 100 OR FRACTION THEREOF OVER 1000

SIGN R99 (CA)

PLAQUE R99B (CA)

SIGN R99 (CA) with PLAQUE R99B (CA)
See Note 6

SIGN R99C (CA)
See Note 6

SIGN R100B (CA)
See Note 10

SIGN R7-8b
See Notes 2 and 6

OFF-STREET PARKING SIGNS
(Parking lot or garage)
See Note 6

NOTES:

1. Accessible parking spaces serving a particular building shall be located on the shortest accessible route of travel from adjacent parking to an accessible entrance. In parking facilities that do not serve a particular building, accessible parking shall be located on the shortest accessible route of travel to an accessible pedestrian entrance of the parking facility.
2. One in every six accessible off-street parking stalls, but not less than one, shall be served by an accessible aisle of 8'-0" minimum width and shall be signed van accessible. The R7-8b sign shall be mounted below the R99B (CA) plaque or the R99C (CA) sign.
3. In each parking stall, a curb or parking bumper shall be provided if required to prevent encroachment of vehicles over the required width of walkways. Parking stalls shall be so located that persons with disabilities are not compelled to wheel or walk behind parked vehicles other than their own. For more parking bumper requirements, see the Special Provisions.
4. Parking spaces and access aisles shall be level with surface slopes not exceeding 1.5% in all directions.
5. Table A shall be used to determine the required number of accessible parking stalls in each parking lot or garage.
6. Where Plaque R99B (CA), Sign R99C (CA) or Sign R7-8b are installed, the bottom of the sign or plaque panel shall be a minimum of 7'-0" above the surrounding surface.
7. Curb ramps shall conform to the details shown on Revised Standard Plan RSP A88A.
8. Blue paint, instead of white may be used for marking accessibility aisles in areas where snow may cause white markings to not be visible.
9. The words "NO PARKING", shall be painted in white letters no less than 1'-0" high and located so that it is visible to traffic enforcement officials. See Revised Standard Plan RSP A90B for details of the "NO PARKING" pavement marking.
10. A R100B (CA) sign shall be posted in a conspicuous place at each entrance to off-street parking facilities or immediately adjacent to and visible from each stall. The sign shall include the address where the towed vehicle may be reclaimed and the telephone number of the local traffic law enforcement agency.
11. Where a single (non-van) accessible parking space is provided, the loading and unloading access aisle shall be on the passenger side of the vehicle as the vehicle is going forward into the parking space.
12. Where a van accessible parking space is provided, the loading and unloading access aisle shall be 8'-0" wide minimum, and shall be on the passenger side of the vehicle as the vehicle is going forward into the parking space.
13. Accessible Parking Only Sign shall be Sign R99C (CA) or Sign R99 (CA) with Plaque R99B (CA).

LEGEND

ISA = International Symbol of Accessibility

STATE OF CALIFORNIA
DEPARTMENT OF TRANSPORTATION

ACCESSIBLE PARKING OFF-STREET

NO SCALE

RSP A90A DATED JULY 3, 2015 SUPERSEDES RSP A90A DATED JULY 19, 2013 AND STANDARD PLAN A90A DATED MAY 20, 2011 - PAGE 123 OF THE STANDARD PLANS BOOK DATED 2010.

REVISED STANDARD PLAN RSP A90A

2010 REVISED STANDARD PLAN RSP A90A

4-28-16

Dist	COUNTY	ROUTE	POST MILES TOTAL PROJECT	SHEET No.	TOTAL SHEETS
04	Ala	580	41.5	90	123

REGISTERED CIVIL ENGINEER

July 15, 2016
PLANS APPROVAL DATE

REGISTERED PROFESSIONAL ENGINEER Carl M. Duan No. C59976 Exp. 6-30-18 CIVIL STATE OF CALIFORNIA

THE STATE OF CALIFORNIA OR ITS OFFICERS OR AGENTS SHALL NOT BE RESPONSIBLE FOR THE ACCURACY OR COMPLETENESS OF SCANNED COPIES OF THIS PLAN SHEET.

TO ACCOMPANY PLANS DATED 6-7-16

NOTE:

1. For notes and Table 2, See Revised Standard Plan RSP D72C.

TABLE 1		
	T_1	Vert BARS
L_1 AND L_2 < 2'-10"	9"	#4 @ 12
L_1 OR L_2 > 2'-10"	12"	#5 @ 12

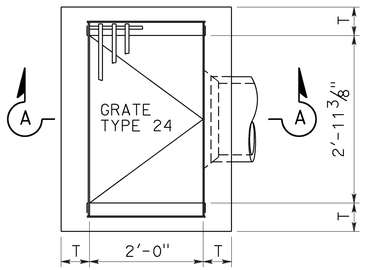

PLAN
TYPE G1

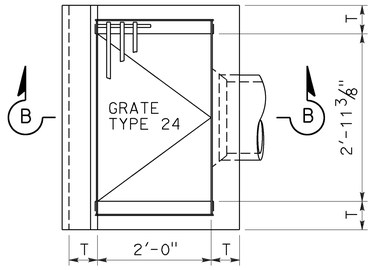

PLAN
TYPE G3

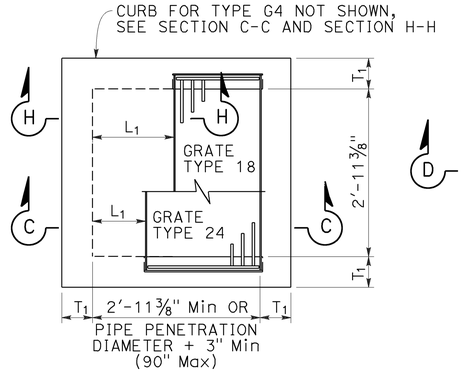

PLAN
STANDARD
TYPE G2 OR G4

FOR "L1", "L2" AND "T1" VALUES, SEE "TABLE 1"

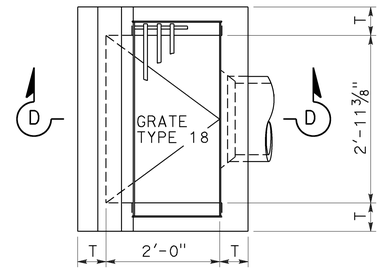

PLAN
TYPE G5

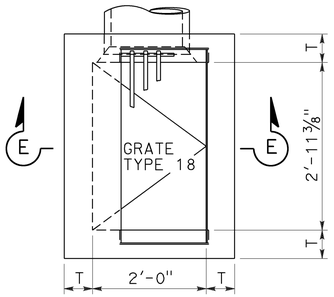

PLAN
TYPE G6

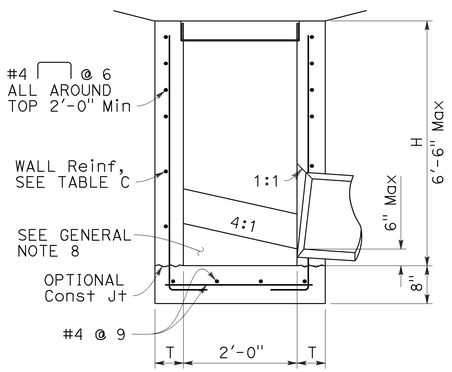

SECTION A-A

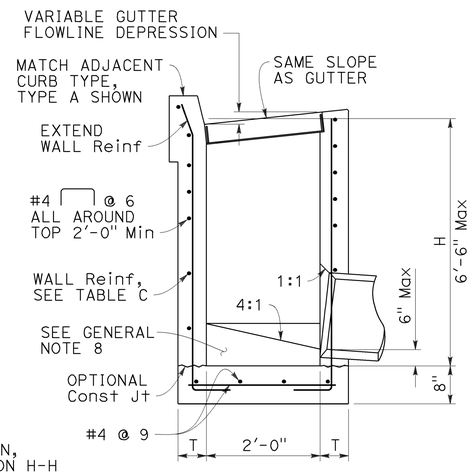

SECTION B-B

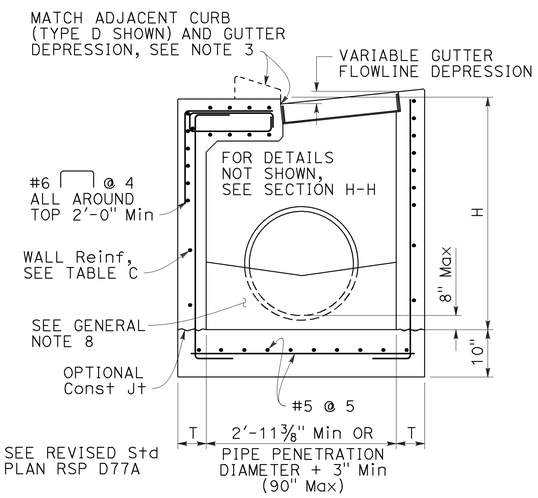

SECTION C-C

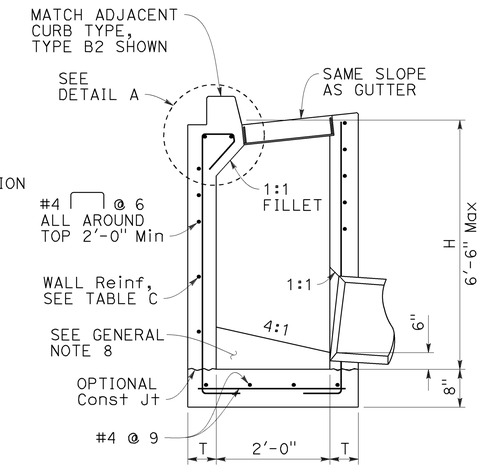

SECTION D-D

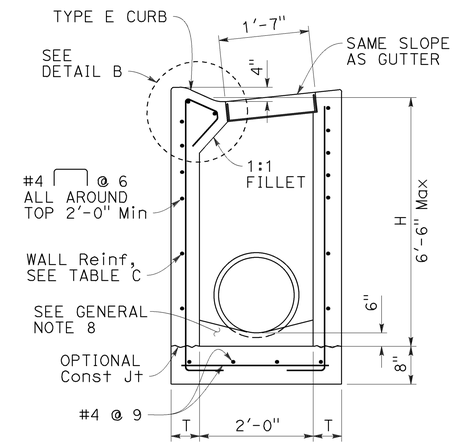

SECTION E-E

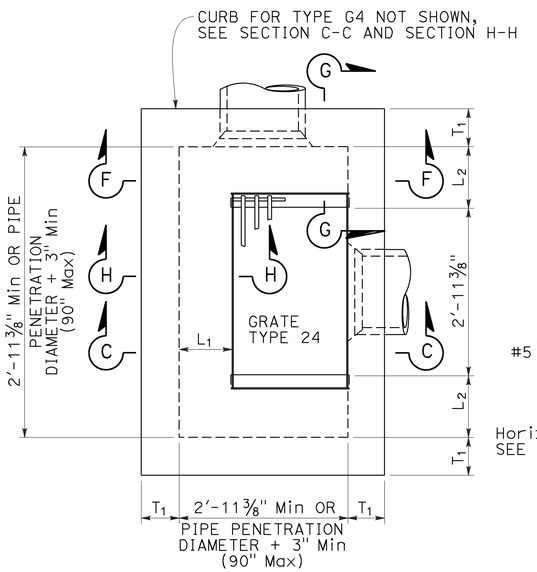

PLAN
EXPANDED
TYPE G2 OR G4

(INTEGRAL TOP ALTERNATIVE)
FOR "L" AND "T" VALUES, SEE TABLE 1

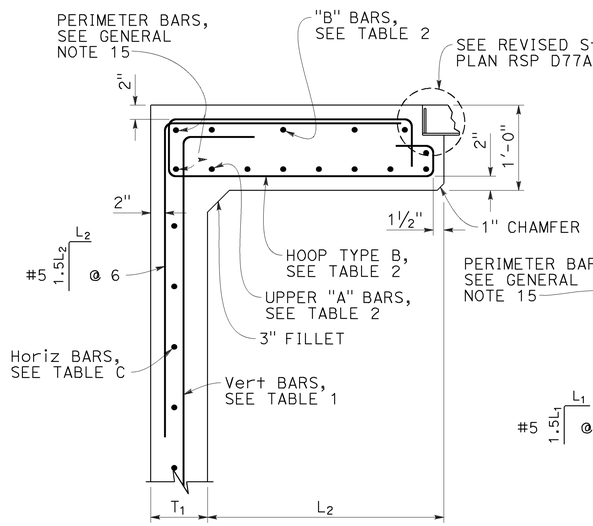

SECTION G-G

FOR "L1", "L2" AND "T1" VALUES, SEE "TABLE 1"

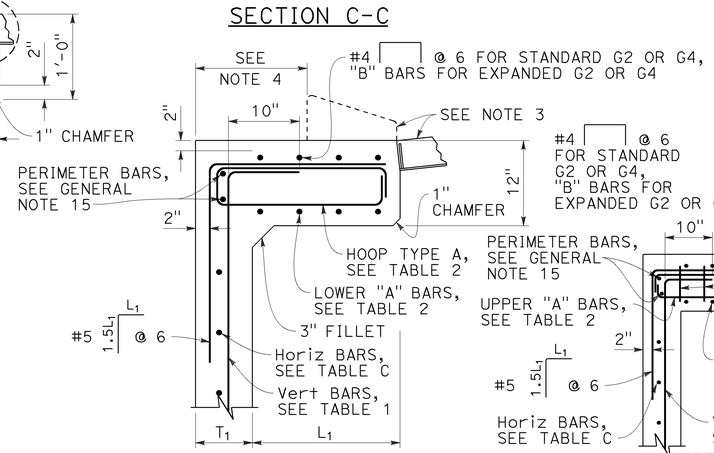

SECTION H-H

FOR "L1", "L2" AND "T1" VALUES, SEE "TABLE 1"

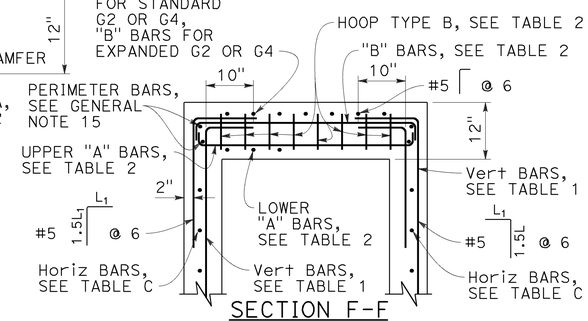

SECTION F-F

FOR "L1", "L2" AND "T1" VALUES, SEE "TABLE 1"

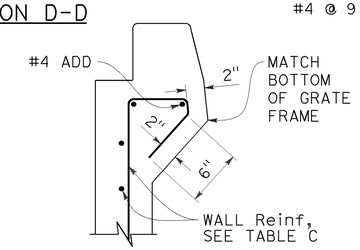

DETAIL A

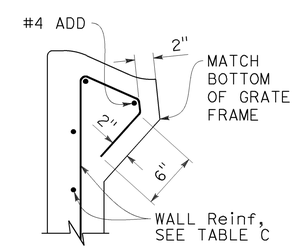

DETAIL B

STATE OF CALIFORNIA
DEPARTMENT OF TRANSPORTATION

CIP DRAINAGE INLETS TYPES G1, G2, G3, G4, G5 AND G6

NO SCALE

RSP D72A DATED JULY 15, 2016 SUPPLEMENTS THE STANDARD PLANS BOOK DATED 2010.

REVISED STANDARD PLAN RSP D72B

2010 REVISED STANDARD PLAN RSP D72B

6-20-16

Dist	COUNTY	ROUTE	POST MILES TOTAL PROJECT	SHEET No.	TOTAL SHEETS
04	Ala	580	41.5	91	123

REGISTERED CIVIL ENGINEER

July 15, 2016
PLANS APPROVAL DATE

REGISTERED PROFESSIONAL ENGINEER
Carl M. Duan
No. C59976
Exp. 6-30-18
CIVIL
STATE OF CALIFORNIA

THE STATE OF CALIFORNIA OR ITS OFFICERS OR AGENTS SHALL NOT BE RESPONSIBLE FOR THE ACCURACY OR COMPLETENESS OF SCANNED COPIES OF THIS PLAN SHEET.

TO ACCOMPANY PLANS DATED 6-7-16

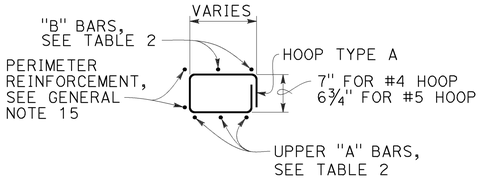

HOOP TYPE A

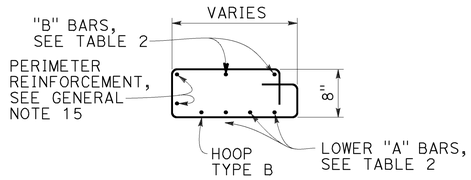

HOOP TYPE B

NOTES:

1. See Revised Standard Plan RSP D72F for General Notes and additional details. See Revised Standard Plan RSP D72G for tables and quantities.
2. Type G4 inlet can use Grate Type 18 or 24. Type G2 inlet uses Grate Type 24.
3. Type G4 inlet details are similar to Type G2 inlet details, except for the addition of a curb and sloped grate to match the adjacent curb and gutter depression.
4. Dimension will vary with different grates, curb types, box width and wall thickness.

TABLE 2 - TOP SLAB REINFORCEMENT

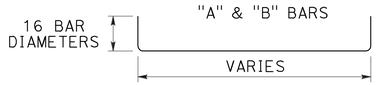

	W/ CURB	W/O CURB
"A" BARS	#4 @ 5 (2 BARS Min)	#5 @ 5 (3 BARS Min)
"B" BARS	#4 @ 10 (2 BARS Min)	#4 @ 12 (2 BARS Min)
HOOPS ("A" & "B")	#4 @ 5	#5 @ 5

ROTATE "A" AND "B" BARS SO HOOKED ENDS WILL MAINTAIN 2" CLEAR COVERAGE.

STATE OF CALIFORNIA
DEPARTMENT OF TRANSPORTATION

CIP DRAINAGE INLETS TYPES G1, G2, G3, G4, G5 AND G6

NO SCALE

RSP D72C DATED JULY 15, 2016 SUPPLEMENTS THE STANDARD PLANS BOOK DATED 2010.

REVISED STANDARD PLAN RSP D72C

2010 REVISED STANDARD PLAN RSP D72C

6-20-16

Dist	COUNTY	ROUTE	POST MILES TOTAL PROJECT	SHEET No.	TOTAL SHEETS
04	Ala	580	41.5	92	123

REGISTERED CIVIL ENGINEER

July 15, 2016
PLANS APPROVAL DATE

REGISTERED PROFESSIONAL ENGINEER
Carl M. Duan
No. C59976
Exp. 6-30-18
CIVIL
STATE OF CALIFORNIA

THE STATE OF CALIFORNIA OR ITS OFFICERS OR AGENTS SHALL NOT BE RESPONSIBLE FOR THE ACCURACY OR COMPLETENESS OF SCANNED COPIES OF THIS PLAN SHEET.

TO ACCOMPANY PLANS DATED 6-7-16

GENERAL NOTES:

1. "H" is measured from top of bottom slab to the normal gutter grade line undepressed at the curb face.
2. For "T" wall thickness and reinforcement, see Table C on Revised Standard Plan RSP D72G.
3. Wall reinforcement must be placed in the center of the wall thickness with horizontal bars placed on the exterior face. Bottom slab concrete cover must be 3" clear on the interior face unless otherwise noted. Top slab concrete cover must be 2" clear on the exterior face unless otherwise noted. Reinforcement spacing is in inches unless otherwise noted.
4. Steps - None required where "H" is less than 2'-6". Where "H" is 2'-6" or more, install steps with lowest rung 1'-0" above the floor and highest rung not more than 6" below bottom of lid. The distance between steps must not exceed 1'-0" and be uniform throughout the length of the wall. Place steps in the wall without an opening. Steps inserts may be substituted for the bar steps. Step inserts must comply with State Industrial Safety Requirements. See Revised Standard Plan RSP D74 for step details.
5. Pipe(s) can be placed in any wall. Adjacent to each side of the opening, place additional reinforcement equivalent to half the interupted main reinforcement. For larger pipes greater than or equal to 42" diameter, also add 4 diagonal bars, 1 bar each side. Bars must be the same size as the larger of the main vertical or horizontal bars. Extend bars one development length past the intersection with the adjacent diagonal bar, or where bars intersect mid thickness of adjacent wall bottom or top of non-continuous wall, bend ends as required into same plane.
6. Set inlet so that grate bars are parallel to direction of principal surface flow.
7. Curb section must match adjacent curb.
8. Except for inlets used as junction boxes, basin floors must have wood trowel finish and a minimum slope of 4:1, unless otherwise noted, from all directions toward outlet pipe by casting grout fill on top of the bottom slab. The additional volume to achieve the 4:1 slope may also be achieved by casting the bottom slab and fill as a composite concrete element.
9. See Revised Standard Plans RSP D77A and RSP D77B for grate and frame details and weights of miscellaneous iron and steel.
10. See Standard Plans D78A and D78B for gutter depression details.
11. See Revised Standard Plans RSP A87A and RSP A87B for curb and dike details.
12. Details shown apply to metal, concrete and plastic pipe(s).
13. The Contractor may use WWR instead of bar reinforcement. The ratio of bar reinforcement to WWR shall be based on the yield strength ratio.
14. Cast-in-place (CIP) inlets to be formed around all pipes/stubs intersecting the inlet, and concrete poured in one continuous operation.
15. Perimeter reinforcement must not be smaller than main bars and #4 and serves as a rigid frame to position and attach the required structural reinforcement and may be tack welded at outer corners when using ASTM A706 weldable bars.

DESIGN NOTES:

1. Design Specifications: AASHTO LRFD Bridge Design Specifications, 6th edition with 2012 Interims and Errata and CA Amendments.
2. Live Load (AASHTO LRFD 3.6.1.2):
   HL-93, consists of design truck or tandem, and design lane load.
   Dynamic Load Allowance, IM = 33%
   Multiple Presence Factor, m = 1.0
   Design lane load was excluded in Top Slab design.
   A wheel load of 8 kips without impact factor was used for top slabs that are above a curb.
3. Earth Load:
   Vertical pressure = 140 pcf
   Lateral pressure:
   = 100 pcf for walls with flat embankment
   = 140 pcf For walls with slope embankment, 1.5:1 Max
4. Downdrag: ϕ = 34° and γ_E = 120 pcf.
5. Buoyancy: γ_W = 62.4 pcf to finished grade
6. Reinforced Concrete: f'c = 3.6 ksi, fy = 60.0 ksi.
7. Soil pressures shown are factored per AASHTO LRFD and include self-weight, live load and downdrag.

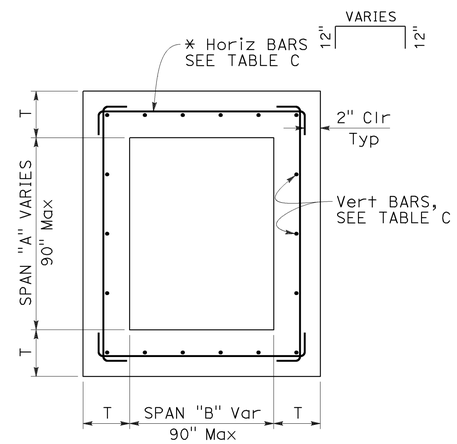

TYPICAL INLET PLAN

* ALTERNATIVE HORIZONTAL BARS

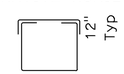

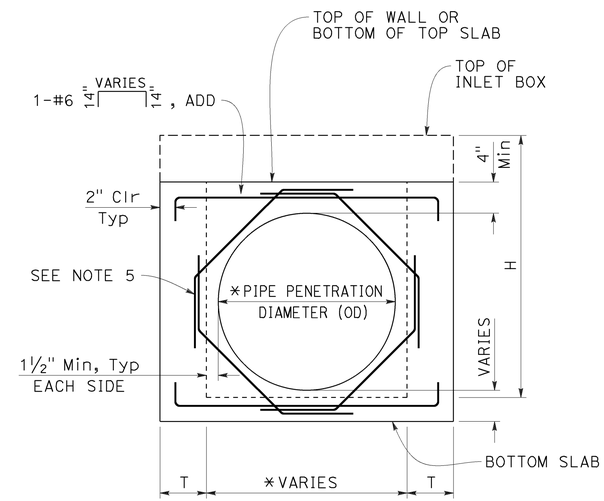

TYPICAL WALL
W/ PIPE OPENING

* SEE "SKEWED PIPE PLAN"

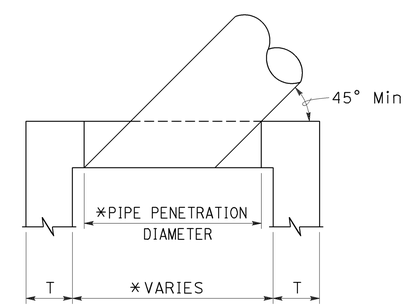

SKEWED PIPE PLAN

* ADJUST PIPE PENETRATION AND BOX WIDTH FOR SKEWED PIPES.

STATE OF CALIFORNIA
DEPARTMENT OF TRANSPORTATION

CIP DRAINAGE INLET NOTES

NO SCALE

RSP D72F DATED JULY 15, 2016 SUPPLEMENTS THE STANDARD PLANS BOOK DATED 2010.

REVISED STANDARD PLAN RSP D72F

2010 REVISED STANDARD PLAN RSP D72F

6-20-16

Dist	COUNTY	ROUTE	POST MILES TOTAL PROJECT	SHEET No.	TOTAL SHEETS
04	Ala	580	41.5	93	123

REGISTERED CIVIL ENGINEER

July 15, 2016
PLANS APPROVAL DATE

REGISTERED PROFESSIONAL ENGINEER
Carl M. Duan
No. C59976
Exp. 6-30-18
CIVIL
STATE OF CALIFORNIA

THE STATE OF CALIFORNIA OR ITS OFFICERS OR AGENTS SHALL NOT BE RESPONSIBLE FOR THE ACCURACY OR COMPLETENESS OF SCANNED COPIES OF THIS PLAN SHEET.

TO ACCOMPANY PLANS DATED 6-7-16

TABLE A - CONCRETE QUANTITIES

TYPE	H=3'-0" TO 8'-0"		H=8'-1" TO 20'-0"	
	H=3'-0" (CY)	ADDITIONAL CONCRETE PER FOOT (CY)	H=8'-1" (CY)	ADDITIONAL CONCRETE PER FOOT (CY)
G1	0.95	0.220	SEE NOTE 2	SEE NOTE 2
G2*	2.00	0.411	5.11	0.525
G3	1.03	0.220	SEE NOTE 2	SEE NOTE 2
G4 (TYPE 18)*	2.02	0.411	5.14	0.525
G4 (TYPE 24)*	1.99	0.411	5.10	0.525
G5	1.02	0.220	SEE NOTE 2	SEE NOTE 2
G6	1.04	0.220	SEE NOTE 2	SEE NOTE 2
OS	1.53	0.278	5.08	0.504
OL7	2.06	0.278	6.17	0.566
OL10	2.85	0.278	6.85	0.566
OL14	3.81	0.278	7.78	0.566
OL21	5.71	0.278	9.62	0.566
GOL7	2.48	0.313	6.89	0.630
GOL10	3.41	0.313	7.85	0.630
GT1	1.72	0.248	SEE NOTE 2	SEE NOTE 2
GT2	2.93	0.530	7.73	0.762
GT3	1.74	0.348	SEE NOTE 2	SEE NOTE 2
GT4	2.83	0.530	7.62	0.762
GO	1.26	0.245	4.90	0.506
GDO	1.74	0.322	6.33	0.647

* Quantities are based on the minimum interior dimensions.

TABLE B - REINFORCEMENT QUANTITIES

TYPE	H=3'-0" TO 8'-0"		H=8'-1" TO 20'-0"	
	H=3'-0" (LB)	ADDITIONAL REINFORCEMENT PER FOOT (LB)	H=8'-1" (LB)	ADDITIONAL REINFORCEMENT PER FOOT (LB)
G1	118	22.20	SEE NOTE 2	SEE NOTE 2
G2*	729	86.48	1794	171.79
G3	118	22.20	SEE NOTE 2	SEE NOTE 2
G4 (TYPE 18)*	647	86.48	1675	171.79
G4 (TYPE 24)*	647	86.48	1675	171.79
G5	118	22.20	SEE NOTE 2	SEE NOTE 2
G6	118	22.20	SEE NOTE 2	SEE NOTE 2
OS	245	49.88	1057	120.77
OL7	458	50.53	1324	126.75
OL10	729	50.53	1595	126.75
OL14	982	50.53	1849	126.75
OL21	1453	50.53	2320	126.75
GOL7	644	83.57	1969	148.79
GOL10	883	83.57	2208	148.79
GT1	486	96.91	SEE NOTE 2	SEE NOTE 2
GT2	1040	117.08	2543	233.37
GT3	486	96.91	SEE NOTE 2	SEE NOTE 2
GT4	1001	117.08	2556	237.88
GO	308	32.44	1013	96.56
GDO	519	57.09	1654	165.66

* Quantities are based on the minimum interior dimensions.

TABLE D

INLET	CURB USED IN QUANTITIES
G1	-
G2	-
G3	A1-6
G4 (Type 18)	A1-6
G4 (Type 24)	A1-6
G5	B1-4
G6	½E
OS	-
OL7	-
OL10	-
OL14	-
OL21	-
GOL7	-
GOL10	-
GT1	D-6
GT2	E
GT3	A2-8
GT4	A2-8
GO	-
GDO	-

TABLE C - WALL REINFORCEMENT

TYPE	H≤8 (T=6",UON)		8<H≤20 (T=11",UON)	
	HORIZ	VERTICAL	HORIZ	VERTICAL
OS	#4 @ 8	#4 @ 6	#5 @ 6	#6 @ 4.5
OL	#4 @ 6	#4 @ 6	#5 @ 6	#6 @ 4.5
GOL	#5 @ 6	#5 @ 8	#6 @ 5	#6 @ 4.5
G1 (H≤6-6")	#3 @ 6	#3 @ 6	-	-
G2	T=9" #5 @ 5	#5 @ 5	T=11" #6 @ 4	#6 @ 4.5
G3 (H≤6-6")	#3 @ 6	#3 @ 6	-	-
G4	T=9" #5 @ 5	#5 @ 5	T=11" #6 @ 4	#6 @ 4.5
G5 (H≤6-6")	#3 @ 6	#3 @ 6	-	-
G6 (H≤6-6")	#3 @ 6	#3 @ 6	-	-
GT1 (H≤6-6")	#5 @ 6	#5 @ 6	-	-
GT2	T=8" #5 @ 6	#5 @ 6	#6 @ 4	#6 @ 4.5
GT3 (H≤6-6")	#5 @ 6	#5 @ 6	-	-
GT4	T=8" #5 @ 6	#5 @ 6	#6 @ 4	#6 @ 4.5
GO	#4 @ 9	#4 @ 6	#4 @ 6	#6 @ 4.5
GDO	#4 @ 6	#4 @ 6	#5 @ 4	#6 @ 4.5

TABLE E

SOIL PRESSURE BELOW BASE SLAB (ksf)		
TYPE	H=8'-0"	8'-0"< H ≤20'-0"
OS	2.93	5.56
OL*	2.93	5.56
GOL*	2.50	5.06
G1	3.67	-
G2	2.99	5.91
G3	3.67	-
G4	2.99	5.91
G5	3.67	-
G6	3.67	-
GT1	3.66	-
GT2	3.91	6.07
GT3	3.86	-
GT4	3.91	6.07
GO	3.42	6.11
GDO	2.52	6.95

* Main Box

NOTES:

1. No deduction or adjustment was made to the quantities of concrete and reinforcement for pipe openings, floor alternatives or curb type.
2. Maximum allowable height is 6'-6".
3. Quantities are approximate and for design purposes only.
4. Design is based on envelope of level and sloped ground.

STATE OF CALIFORNIA
DEPARTMENT OF TRANSPORTATION

CIP DRAINAGE INLET TABLES

NO SCALE

RSP D72G DATED JULY 15, 2016 SUPPLEMENTS THE STANDARD PLANS BOOK DATED 2010.

REVISED STANDARD PLAN RSP D72G

2010 REVISED STANDARD PLAN RSP D72G

6-20-16

Dist	COUNTY	ROUTE	POST MILES TOTAL PROJECT	SHEET No.	TOTAL SHEETS
04	Ala	580	41.5	94	123

REGISTERED CIVIL ENGINEER

July 15, 2016
PLANS APPROVAL DATE

REGISTERED PROFESSIONAL ENGINEER Carl M. Duan No. C59976 Exp. 6-30-18 CIVIL STATE OF CALIFORNIA

THE STATE OF CALIFORNIA OR ITS OFFICERS OR AGENTS SHALL NOT BE RESPONSIBLE FOR THE ACCURACY OR COMPLETENESS OF SCANNED COPIES OF THIS PLAN SHEET.

TO ACCOMPANY PLANS DATED 6-7-16

NOTE:

1. For notes and Table 2, See Revised Standard Plan RSP D73C.

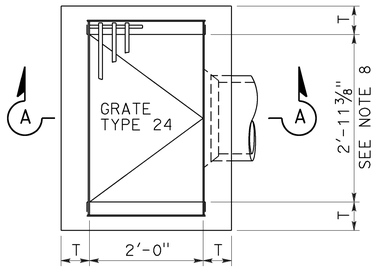

PLAN
TYPE G1

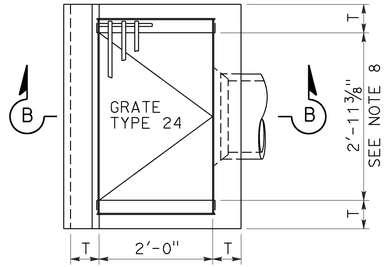

PLAN
TYPE G3

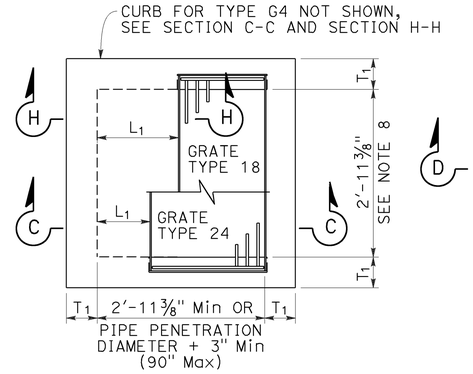

PLAN
STANDARD TYPE G2 OR G4
(INTEGRAL TOP ALTERNATIVE)
FOR "L" AND "T" VALUES, SEE TABLE 1

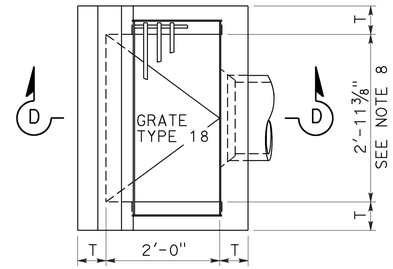

PLAN
TYPE G5

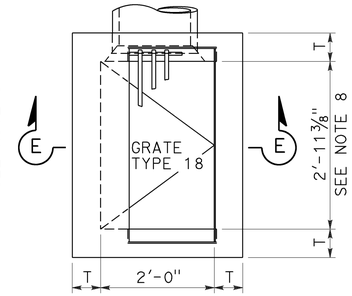

PLAN
TYPE G6

TABLE 1		
	T_1	Vert BARS
L_1 AND L_2 < 2'-10"	8"	#4 @ 12
L_1 OR L_2 > 2'-10"	12"	#5 @ 12

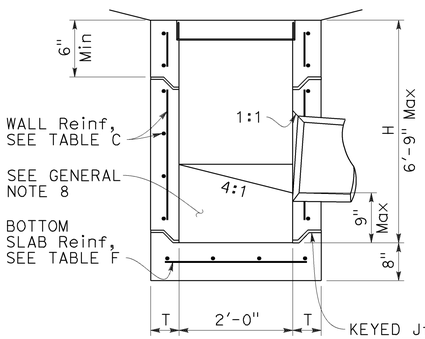

SECTION A-A

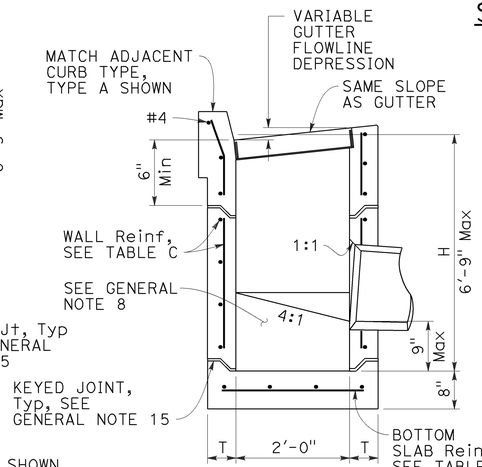

SECTION B-B

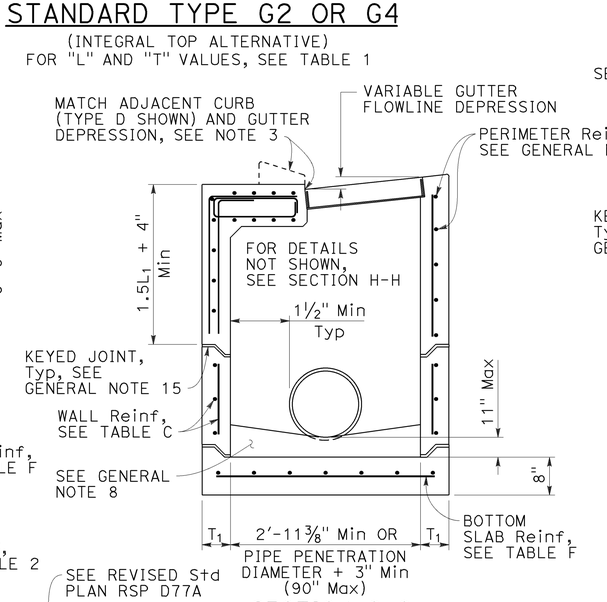

SECTION C-C
FOR "L1", "L2" AND "T1" VALUES, SEE "TABLE 1"

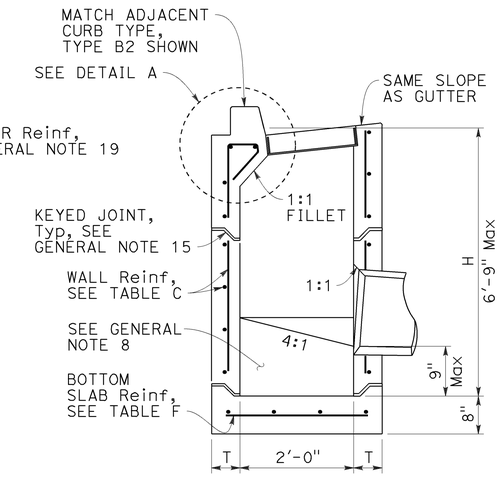

SECTION D-D

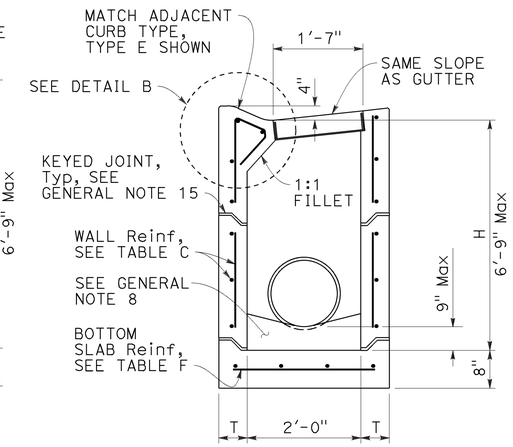

SECTION E-E

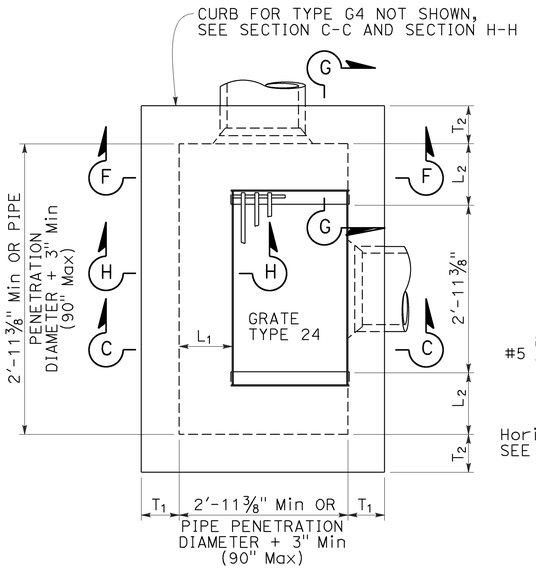

PLAN
EXPANDED
TYPE G2 OR G4
(INTEGRAL TOP ALTERNATIVE)
FOR "L1", "L2" AND "T1" VALUES, SEE "TABLE 1"

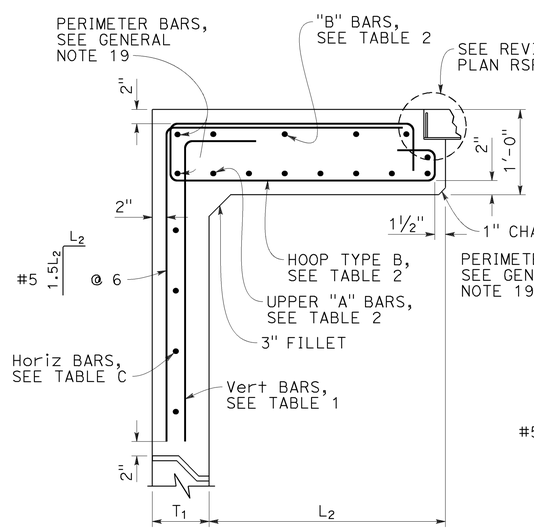

SECTION G-G
FOR "L1", "L2" AND "T1" VALUES, SEE "TABLE 1"

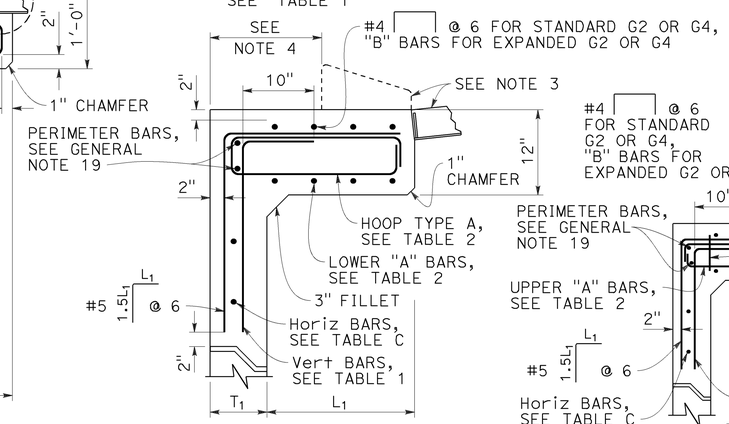

SECTION H-H
FOR "L1", "L2" AND "T1" VALUES, SEE "TABLE 1"

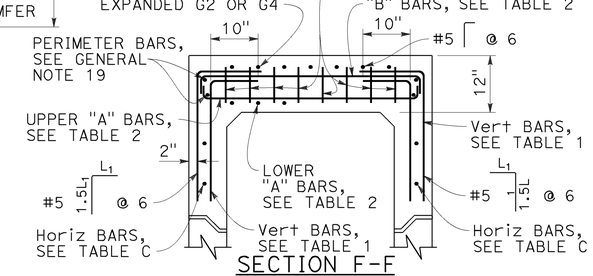

SECTION F-F
FOR "L1", "L2" AND "T1" VALUES, SEE "TABLE 1"

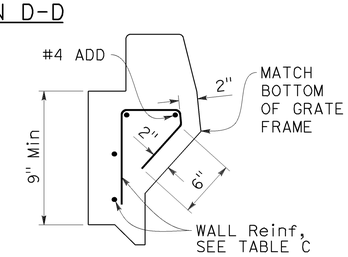

DETAIL A

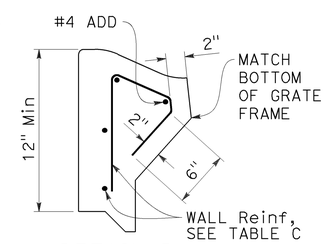

DETAIL B

STATE OF CALIFORNIA
DEPARTMENT OF TRANSPORTATION

PRECAST DRAINAGE INLETS TYPES G1, G2, G3, G4, G5 AND G6

NO SCALE

RSP D73B DATED JULY 15, 2016 SUPPLEMENTS THE STANDARD PLANS BOOK DATED 2010.

REVISED STANDARD PLAN RSP D73B

2010 REVISED STANDARD PLAN RSP D73B

6-29-16

Dist	COUNTY	ROUTE	POST MILES TOTAL PROJECT	SHEET No.	TOTAL SHEETS
04	Ala	580	41.5	95	123

REGISTERED CIVIL ENGINEER

July 15, 2016
PLANS APPROVAL DATE

REGISTERED PROFESSIONAL ENGINEER Carl M. Duan No. C59976 Exp. 6-30-18 CIVIL STATE OF CALIFORNIA

THE STATE OF CALIFORNIA OR ITS OFFICERS OR AGENTS SHALL NOT BE RESPONSIBLE FOR THE ACCURACY OR COMPLETENESS OF SCANNED COPIES OF THIS PLAN SHEET.

TO ACCOMPANY PLANS DATED 6-7-16

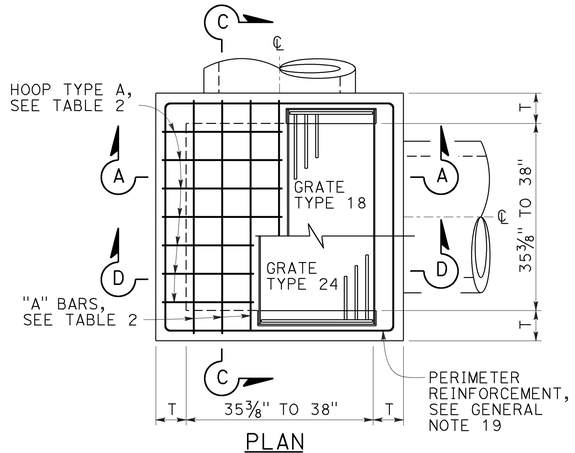

PLAN

STANDARD TYPE G2 OR G4

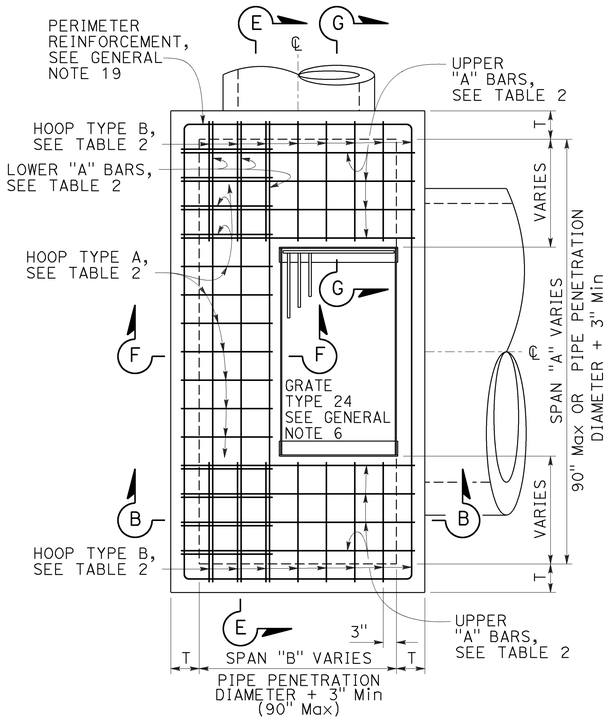

PLAN
EXPANDED
TYPE G2 OR G4
(TOP REBAR NOT SHOWN)

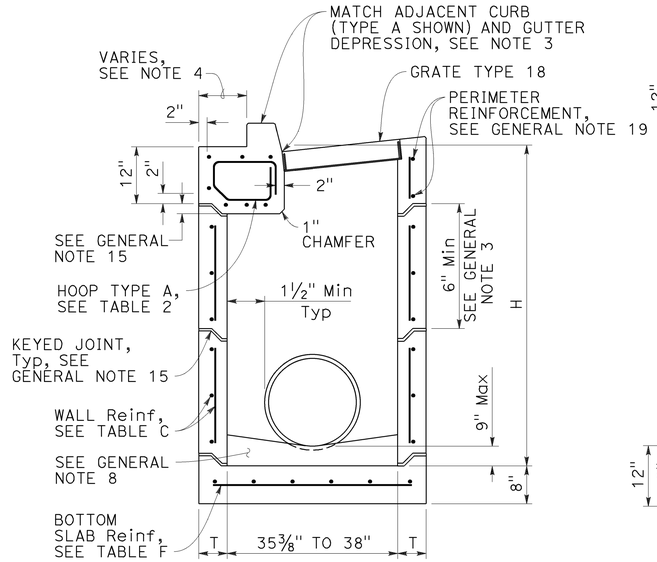

SECTION A-A
(WITH G4 TOP)

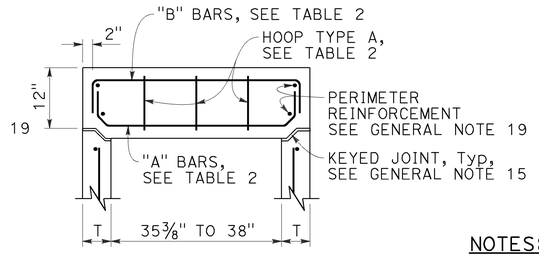

SECTION C-C

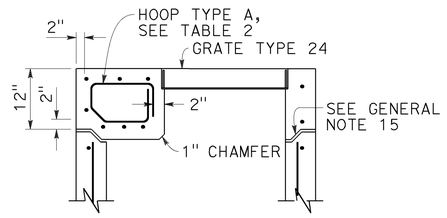

SECTION D-D
(WITH G2 TOP)

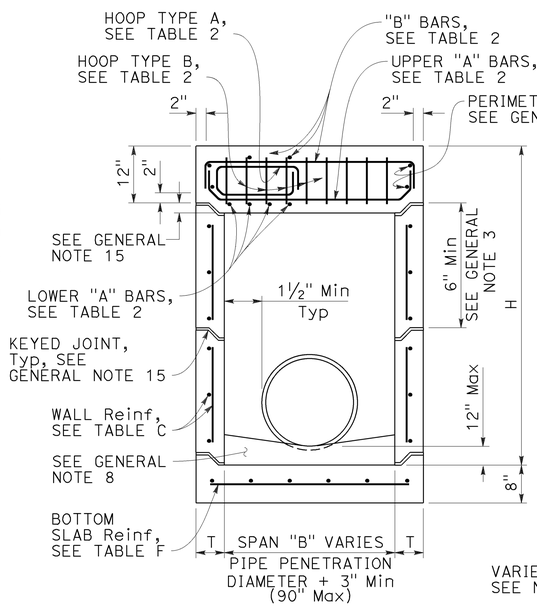

SECTION B-B
(WITH G2 TOP)

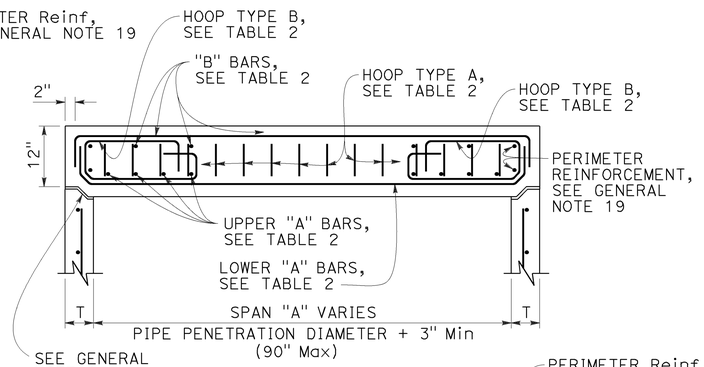

SECTION E-E

NOTES:

1. See Revised Standard Plan RSP D73F for General Notes and additional details. See Revised Standard Plan RSP D73G for additional tables, wall thickness "T" and quantities.
2. Type G4 inlet can use Grate Type 18 or 24. Type G2 inlet uses Grate Type 24.
3. G4 inlet details are the same as the G2 with the addition of a curb and sloped grate that matches the adjacent curb and gutter depression.
4. Dimension will vary with different grates, curb types, box width and wall thickness.
5. 2" unless inlet is expanded in the Span "A" direction, then clearance is 2" plus the diameter of the lower "A" bar.
6. See Revised Standard Plan RSP D73B for integral top slab alternative.
7. Interior dimension of lower sections of inlet may be 3'-0" provided top section conforms to the requirements for frame and grate types on Revised Standard Plan RSP D77A. The wall thickness of top sections may transition from "T" to "T"+5/16" to meet this requirement. Minimum height of thickened wall shall = "T".

TABLE 2 - TOP SLAB REINFORCEMENT

	W/ CURB	W/O CURB
"A" BARS	#4 @ 5 (2 BARS Min)	#5 @ 5 (3 BARS Min)
"B" BARS	#4 @ 10 (2 BARS Min)	#4 @ 10 (2 BARS Min)
HOOPS ("A" & "B")	#4 @ 5	#5 @ 5

ROTATE "A" AND "B" BARS SO HOOKED ENDS WILL MAINTAIN 2" CLEAR COVERAGE.

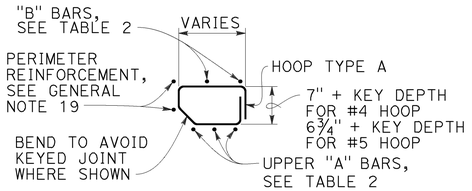

HOOP TYPE A

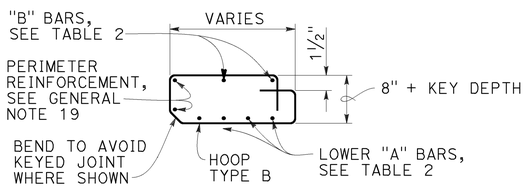

HOOP TYPE B

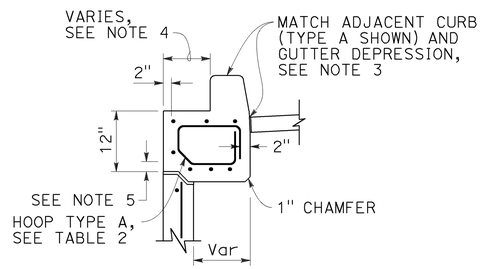

SECTION F-F
(WITH G4 TOP)

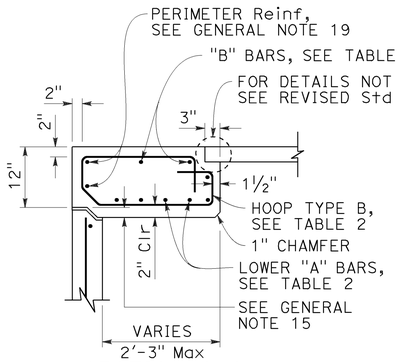

SECTION G-G

STATE OF CALIFORNIA
DEPARTMENT OF TRANSPORTATION

PRECAST DRAINAGE INLETS TYPES G2 AND G4

NO SCALE

RSP D73C DATED JULY 15, 2016 SUPPLEMENTS THE STANDARD PLANS BOOK DATED 2010.

REVISED STANDARD PLAN RSP D73C

2010 REVISED STANDARD PLAN RSP D73C

6-29-16

Dist	COUNTY	ROUTE	POST MILES TOTAL PROJECT	SHEET No.	TOTAL SHEETS
04	Ala	580	41.5	96	123

REGISTERED CIVIL ENGINEER

July 15, 2016
PLANS APPROVAL DATE

REGISTERED PROFESSIONAL ENGINEER Carl M. Duan No. C59976 Exp. 6-30-18 CIVIL STATE OF CALIFORNIA

THE STATE OF CALIFORNIA OR ITS OFFICERS OR AGENTS SHALL NOT BE RESPONSIBLE FOR THE ACCURACY OR COMPLETENESS OF SCANNED COPIES OF THIS PLAN SHEET.

TO ACCOMPANY PLANS DATED 6-7-16

GENERAL NOTES:

1. "H" is measured from top of bottom slab to the normal gutter grade line undepressed at the curb face.
2. For "T" wall thickness and reinforcement, see Table C on Revised Standard Plan RSP D73G.
3. Wall reinforcement must be placed at the center of wall thickness with horizontal bars placed on the exterior face. Bottom slab concrete cover must be 3" clear on the interior side face unless otherwise noted. Top slab concrete cover must be 2" clear on the exterior face unless otherwise noted. Short independent wall sections or height adjustment rings 6" to 24" high must have a minimum of two #4 horizontal bars. Reinforcement spacing is in inches unless otherwise noted.
4. Steps - None required where "H" is less than 2'-6". Where "H" is 2'-6" or more, install steps with lowest rung 1'-0" above the floor and highest rung not more than 6" below bottom of lid. The distance between steps must not exceed 1'-0" and be uniform throughout the length of the wall. Place steps in the wall without an opening. Steps inserts may be substituted for the bar steps. Step inserts must comply with State Industrial Safety Requirements. See Revised Standard Plan RSP D74 for step details.
5. Pipe(s) can be placed in any wall. Adjacent to each side of the opening, place additional reinforcement equivalent to half the interupted main reinforcement. For larger pipes greater than or equal to 42" diameter, also add 4 diagonal bars, 1 bar each side. Bars must be the same size as the larger of the main vertical or horizontal bars. Extend bars one development length past the intersection with the adjacent diagonal bar, or where bars intersect mid thickness of adjacent wall bottom or top of non-continuous wall, bend ends as required into same plane.
6. Set inlet so that grate bars are parallel to direction of principal surface flow.
7. Curb section must match adjacent curb.
8. Except for inlets used as junction boxes, basin floors must have wood trowel finish and a minimum slope of 4:1, unless otherwise noted, from all directions toward outlet pipe by casting grout on top of the bottom slab. Grout must be placed prior to backfill.
9. See Revised Standard Plans RSP D77A and RSP D77B for grate and frame details and weights of miscellaneous iron and steel.
10. See Standard Plans D78A and D78B for gutter depression details.
11. See Revised Standard Plans RSP A87A and RSP A87B for curb and dike details.
12. Details shown apply to metal, concrete and plastic pipe(s).
13. The Contractor may use WWR instead of bar reinforcement. The ratio of bar reinforcement to WWR shall be based on the yield strength ratio.
14. Seal precast inlets connection openings between wall and pipe with non-shrink grout or resilient connectors as specified in the Special Provisions. Precast inlets shall have mortared connections conforming to details for Type GCP Inlet shown on Revised Standard Plan RSP D75B. See Standard Specifications for mortar composition.
15. Where shown, provide precast inlets with separate top sections for final grade adjustment. Provide keyed joints with butyl rubber sealant between the top section and wall, multiple wall sections, and wall and bottom slab. Joint design may vary but must be 1" to 3" in depth. For tongue type joints, tongue down orientation is not allowed. For keyed joints, keyway up, keyway down or tongue up configurations are allowed. Only one key type is allowed for each drainage inlet.
16. Non-shrink grout can be used for upper most joint to facilitate final top grade adjustment.
17. Provide a level and firm sand bedding on which to place precast inlets. Extend sand bedding under all structure backfill.
18. For Integral Base, see Detail "A".
19. Perimeter reinforcement must not be smaller than main bars and #4 and serves as a rigid frame to position and attach the required structural reinforcement and may be tack welded at outer corners when using ASTM A706 weldable bars.
20. Inlet extensions may be cast in place after placement of main box and placement and compaction of backfill. Concrete strength must be 3.6 ksi minimum. All slab and wall thicknesses must be per Revised Standard Plan RSP D72A. All reinforcement shall extend a minimum of 24" from precast main inlet box.

DESIGN NOTES:

1. Design Specifications: AASHTO LRFD Bridge Design Specifications, 6th edition with 2012 Interims and Errata and CA Amendments.
2. Live Load (AASHTO LRFD 3.6.1.2):
   HL-93, consists of design truck or tandem, and design lane load.
   Dynamic Load Allowance, IM = 33%
   Multiple Presence Factor, m = 1.0
   Design lane load was excluded in Top Slab design.
   A wheel load of 8 kips without impact factor was used for top slabs that are above a curb.
3. Earth Load:
   Vertical pressure = 140 pcf
   Lateral pressure:
   = 100 pcf for walls with flat embankment
   = 140 pcf For walls with slope embankment, 1.5:1 Max
4. Downdrag: ϕ = 34° and γ_E = 120 pcf.
5. Buoyancy: γ_W = 62.4 pcf to finished grade.
6. Reinforced Concrete: f'c = 5.0 ksi, fy = 60.0 ksi.
7. Tables are based on the worst case from the level ground and sloped ground.
8. Soil pressures shown are factored per AASHTO LRFD and include self-weight, live load and downdrag.

SPAN "A" OR "B" (IN)	L (IN)
<38	34
38 TO 50	40
51 TO 64	47
65 TO 76	53
77 TO 90	60

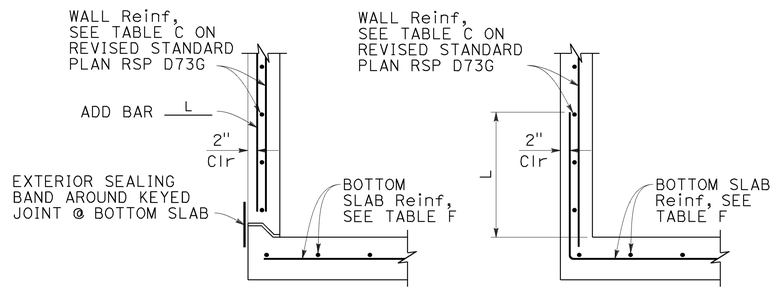

BASE WITH KEYED JOINT — INTEGRAL BASE

DETAIL "A"

FOR INTEGRAL BASE, CLEARANCE BETWEEN PIPE PENETRATION AND BASE SLAB MAY BE AS SHOWN IN CIP ALTERNATIVE STANDARD PLAN SHEET.

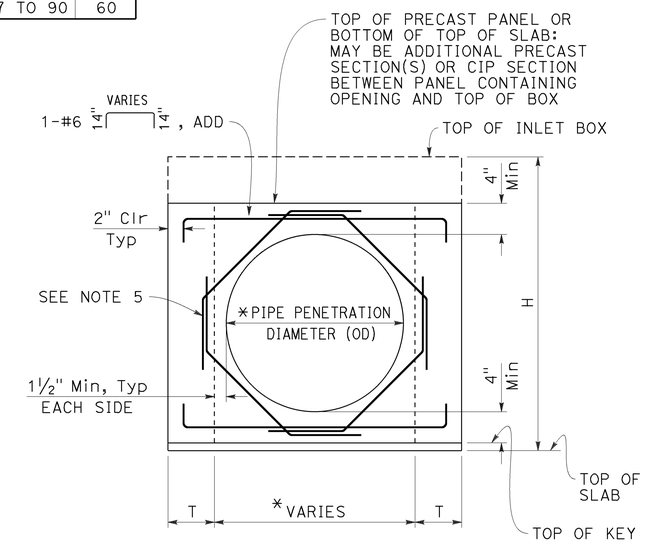

BASE WITH KEYED JOINT

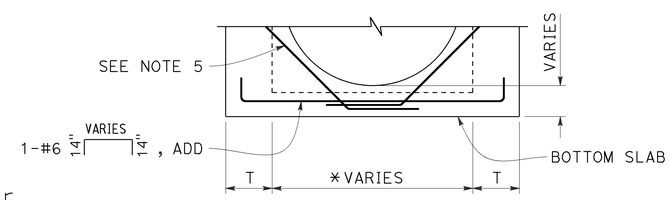

INTEGRAL BASE

FOR DETAILS NOT SHOWN, SEE "BASE WITH KEYED JOINT"

TYPICAL WALL W/ PIPE OPENING

* SEE "SKEWED PIPE PLAN"

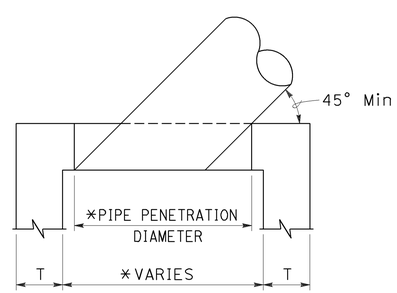

SKEWED PIPE PLAN

* ADJUST PIPE PENETRATION AND BOX WIDTH FOR SKEWED PIPES.

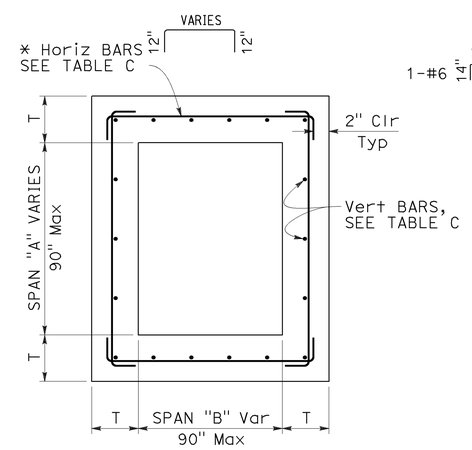

TYPICAL INLET PLAN

* ALTERNATIVE HORIZONTAL BARS

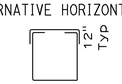

STATE OF CALIFORNIA
DEPARTMENT OF TRANSPORTATION

PRECAST DRAINAGE INLET NOTES

NO SCALE

RSP D73F DATED JULY 15, 2016 SUPPLEMENTS THE STANDARD PLANS BOOK DATED 2010.

REVISED STANDARD PLAN RSP D73F

2010 REVISED STANDARD PLAN RSP D73F

6-20-16

Dist	COUNTY	ROUTE	POST MILES TOTAL PROJECT	SHEET No.	TOTAL SHEETS
04	Ala	580	41.5	97	123

REGISTERED CIVIL ENGINEER

July 15, 2016
PLANS APPROVAL DATE

REGISTERED PROFESSIONAL ENGINEER
Carl M. Duan
No. C59976
Exp. 6-30-18
CIVIL
STATE OF CALIFORNIA

THE STATE OF CALIFORNIA OR ITS OFFICERS OR AGENTS SHALL NOT BE RESPONSIBLE FOR THE ACCURACY OR COMPLETENESS OF SCANNED COPIES OF THIS PLAN SHEET.

TO ACCOMPANY PLANS DATED 6-7-16

2010 REVISED STANDARD PLAN RSP D73G

TABLE A - CONCRETE QUANTITIES

TYPE	H=3'-0" TO 8'-0"		H=8'-1" TO 20'-0"	
	H=3'-0" (CY)	ADDITIONAL CONCRETE PER FOOT (CY)	H=8'-1" (CY)	ADDITIONAL CONCRETE PER FOOT (CY)
G1	0.95	0.220	SEE NOTE 2	SEE NOTE 2
G2*	1.25	0.255	2.55	0.255
G3	1.06	0.220	SEE NOTE 2	SEE NOTE 2
G4 (TYPE 18)*	1.41	0.255	2.71	0.255
G4 (TYPE 24)*	1.36	0.255	2.65	0.255
G5	1.09	0.220	SEE NOTE 2	SEE NOTE 2
G6	1.14	0.220	SEE NOTE 2	SEE NOTE 2
OS	1.28	0.278	2.69	0.278
OL7	1.92	0.278	3.33	0.278
OL10	2.43	0.278	3.84	0.278
OL14	3.16	0.278	4.57	0.278
OL21	4.58	0.278	5.99	0.278
GOL7	2.36	0.313	4.04	0.434
GOL10	2.84	0.313	4.53	0.434
GT1	2.30	0.480	SEE NOTE 2	SEE NOTE 2
GT2	2.71	0.530	5.40	0.530
GT3	2.29	0.480	SEE NOTE 2	SEE NOTE 2
GT4	2.69	0.530	5.39	0.530
GO	1.25	0.245	2.37	0.245
GDO	1.64	0.322	3.37	0.446

* Quantities are based on the minimum interior dimensions.

TABLE B - REINFORCEMENT QUANTITIES

TYPE	H=3'-0" TO 8'-0"		H=8'-1" TO 20'-0"	
	H=3'-0" (LB)	ADDITIONAL REINFORCEMENT PER FOOT (LB)	H=8'-1" (LB)	ADDITIONAL REINFORCEMENT PER FOOT (LB)
G1	88.5	21.90	SEE NOTE 2	SEE NOTE 2
G2*	151.5	24.54	277.4	38.64
G3	92.9	21.90	SEE NOTE 2	SEE NOTE 2
G4 (TYPE 18)*	134.4	24.54	260.3	38.64
G4 (TYPE 24)*	125.1	24.54	251.0	38.64
G5	92.5	21.90	SEE NOTE 2	SEE NOTE 2
G6	92.5	21.90	SEE NOTE 2	SEE NOTE 2
OS	145.8	35.57	327.8	49.60
OL7	328.0	35.57	510.0	49.60
OL10	467.5	35.57	649.5	49.60
OL14	667.5	35.57	849.5	49.60
OL21	1056.1	35.57	1238.1	49.60
GOL7	474.7	45.17	706.8	74.02
GOL10	604.9	45.17	836.9	74.02
GT1	349.0	80.48	SEE NOTE 2	SEE NOTE 2
GT2	403.7	86.82	849.1	135.15
GT3	347.0	80.48	SEE NOTE 2	SEE NOTE 2
GT4	403.7	86.82	849.1	135.15
GO	99.8	23.75	221.7	37.46
GDO	208.8	46.22	446.2	75.61

* Quantities are based on the minimum interior dimensions.

TABLE D

INLET	CURB USED IN QUANTITIES
G1	-
G2	-
G3	A1-6
G4 (Type 18)	A1-6
G4 (Type 24)	A1-6
G5	B1-4
G6	½E
OS	-
OL7	-
OL10	-
OL14	-
OL21	-
GOL7	-
GOL10	-
GT1	D-6
GT2	E
GT3	A2-8
GT4	A2-8
GO	-
GDO	-

TABLE C - WALL REINFORCEMENT

TYPE	H ≤8'-0" (T=6", UON)			8'-0"< H ≤20'-0" (T=8", UON)		
	HORIZONTAL	VERTICAL	*ADD	HORIZONTAL	VERTICAL	*ADD
OS	#4@6	#3@8	#3@8	#4@4 (T=6")	#3@8	#3@8
OL	#4@6	#3@8	#3@8	#4@4 (T=6")	#3@8	#3@8
GOL	#4@5	#3@8	#3@8	#5@5	#3@6	#3@6
G1 (H ≤6'-9")	#4@9	#3@8	#3@8	-	-	-
G2 & G4 (a** ≤38")	#4@9	#3@8	#3@8	#4@5 (T=6")	#3@8	#3@8
G2 & G4 (38" < a** ≤50")	#4@6	#3@8	#3@8	#4@4 (T=6")	#3@8	#3@8
G2 & G4 (50" < a** ≤64")	#4@5	#3@8	#3@8	#5@5	#3@6	#3@6
G2 & G4 (64"< a** ≤76")	#5@7 (T=8")	#3@6	#3@6	#5@4	#3@6	#5@6
G2 & G4 (76" < a** ≤90")	#5@5 (T=8")	#3@6	#3@6	#5@3	#3@6	#5@6
G3 (H ≤6'-9")	#4@9	#3@8	#3@8	-	-	-
G5 (H ≤6'-9")	#4@9	#3@8	#3@8	-	-	-
G6 (H ≤6'-9")	#4@9	#3@8	#3@8	-	-	-
GT1 (H ≤6'-9")	#5@5 (T=8")	#3@6	#3@6	-	-	-
GT2	#5@5 (T=8")	#3@6	#3@6	#5@3	#3@6	#5@6
GT3 (H ≤6'-9")	#5@5 (T=8")	#3@6	#3@6	-	-	-
GT4	#5@5 (T=8")	#3@6	#3@6	#5@3	#3@6	#5@6
GO	#4@9	#3@8	#3@8	#4@5 (T=6")	#3@8	#3@8
GDO	#4@5	#3@8	#3@8	#5@5	#3@6	#3@6

* See Detail A on Revised Standard Plan RSP D73F for additional vertical bars at the base.
** a = Larger interior span

TABLE E

SOIL PRESSURE BELOW BASE SLAB (ksf)

TYPE	H ≤8'-0"	8'-0"< H ≤20'-0"
OS	2.89	5.68
OL*	2.89	5.68
GOL*	2.36	4.93
G1 (H ≤6'-9")	3.51	-
G2 & G4 (a** ≤38")	2.96	5.79
G2 & G4 (38" < a** ≤50")	2.21	4.51
G2 & G4 (50" < a** ≤64")	3.19	4.89
G2 & G4 (64"< a** ≤76")	2.50	4.23
G2 & G4 (76" < a** ≤90")	2.04	3.56
G3 (H ≤6'-9")	3.51	-
G5 (H ≤6'-9")	3.51	-
G6 (H ≤6'-9")	3.51	-
GT1 (H ≤6'-9")	3.41	-
GT2	3.60	6.42
GT3 (H ≤6'-9")	3.41	-
GT4	3.60	6.42
GO	3.37	6.46
GDO	2.48	7.30

* Main Box
** a = Larger interior span

TABLE F

BASE SLAB REINFORCEMENT (T=8", UON)

TYPE	H ≤8'-0"	8'-0"< H ≤20'-0"
OS	#4@8 (EW)	#4@5 (EW)
OL*	#4@8 (EW)	#4@5 (EW)
GOL*	#4@6 (EW)	#4@4 (EW)
G1 (H ≤6'-9")	#4@10 (EW)	-
G2 & G4 (a** ≤38")	#4@10 (EW)	#4@6 (EW)
G2 & G4 (38" < a** ≤50")	#4@8 (EW)	#4@5 (EW)
G2 & G4 (50" < a** ≤64")	#4@6 (EW)	#4@4 (EW)
G2 & G4 (64"< a** ≤76")	#4@5 (EW)	#4@3 (EW)
G2 & G4 (76" < a** ≤90")	#4@4 (EW)	#5@3 (EW)
G3 (H ≤6'-9")	#4@10 (EW)	-
G5 (H ≤6'-9")	#4@10 (EW)	-
G6 (H ≤6'-9")	#4@10 (EW)	-
GT1 (H ≤6'-9")	#4@4 (EW)	-
GT2	#4@4 (EW)	#5@3 (EW)
GT3 (H ≤6'-9")	#4@4 (EW)	-
GT4	#4@4 (EW)	#5@3 (EW)
GO	#4@10 (EW)	#4@6 (EW)
GDO	#4@6 (EW)	#4@4 (EW)

(EW) Each Way
* Main Box
** a = Larger interior span

NOTES:

1. No deduction or adjustment was made to the quantities of concrete and reinforcement for pipe openings, floor alternatives or curb type.
2. Maximum allowable height is 6'-9".
3. Quantities are approximate and for design purposes only.
4. Design is based on envelope of level and sloped ground.

STATE OF CALIFORNIA
DEPARTMENT OF TRANSPORTATION

PRECAST DRAINAGE INLET TABLES

NO SCALE

RSP D73G DATED JULY 15, 2016 SUPPLEMENTS THE STANDARD PLANS BOOK DATED 2010.

REVISED STANDARD PLAN RSP D73G

6-20-16

Dist	COUNTY	ROUTE	POST MILES TOTAL PROJECT	SHEET No.	TOTAL SHEETS
04	Ala	580	41.5	98	123

REGISTERED CIVIL ENGINEER

July 15, 2016
PLANS APPROVAL DATE

REGISTERED PROFESSIONAL ENGINEER
Carl M. Duan
No. C59976
Exp. 6-30-18
CIVIL
STATE OF CALIFORNIA

THE STATE OF CALIFORNIA OR ITS OFFICERS OR AGENTS SHALL NOT BE RESPONSIBLE FOR THE ACCURACY OR COMPLETENESS OF SCANNED COPIES OF THIS PLAN SHEET.

TO ACCOMPANY PLANS DATED 6-7-16

2010 REVISED STANDARD PLAN RSP D74

FACE ANGLE DETAIL "A"	
LENGTH OF CURB OPENING	No. OF ANCHORS
3'-6" OR LESS	2
7'-0"	3
10'-0"	4
14'-0"	5
21'-0"	7

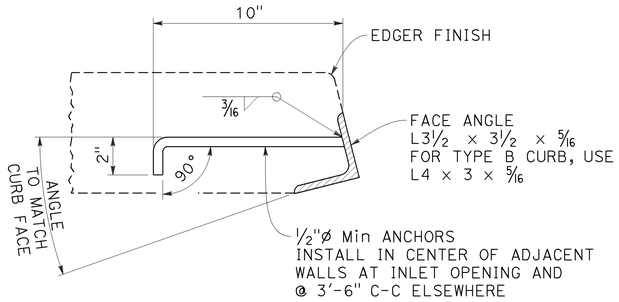

DETAIL "A"

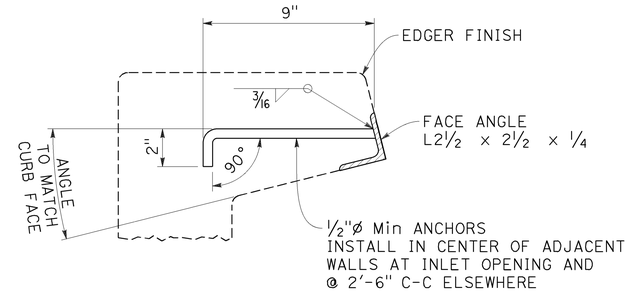

DETAIL "B"

FACE ANGLE AND ANCHOR

NOTE:

1. When shown on the project plans, place a ¾"ø plain round protection bar horizontally across the length of the opening and bend back 4" into the inlet wall on each side.

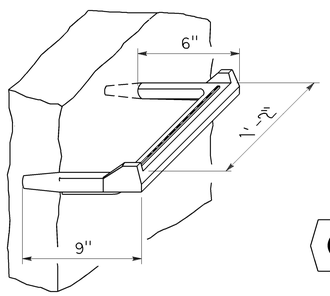

STEP INSERT

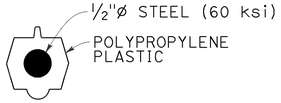

TYPICAL SECTION
(STEP INSERT)

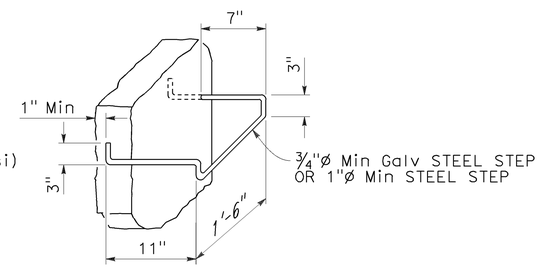

BAR STEP

STEP DETAILS

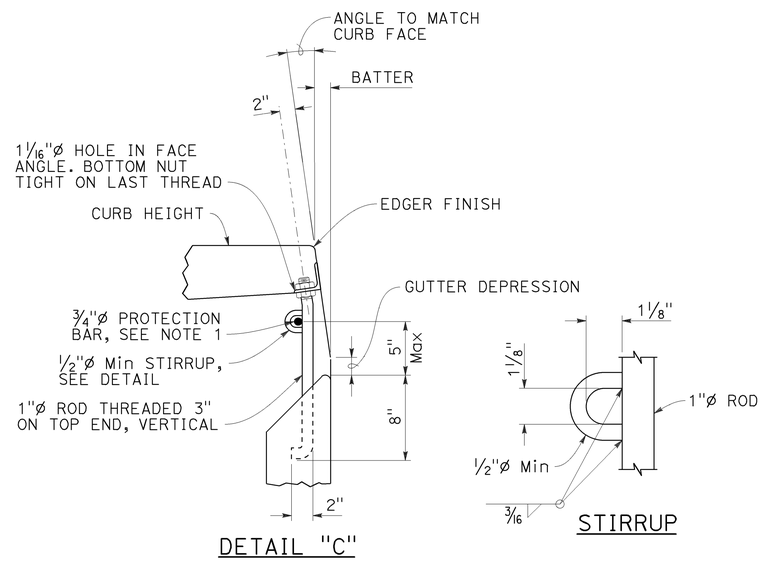

DETAIL "C"

STIRRUP

CURB SUPPORT

CURB SUPPORTS SHALL BE EVENLY SPACED AND MINIMAL IN NUMBER SUCH THAT MAXIMUM SPAN OF UNSUPPORTED CURB IS 7'-0".

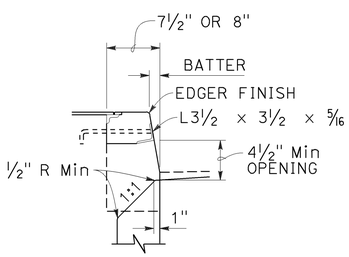

TYPE A CURBS

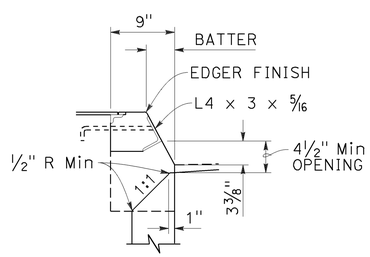

TYPE B CURBS

CURB OPENING DETAILS

STATE OF CALIFORNIA
DEPARTMENT OF TRANSPORTATION

DRAINAGE INLET DETAILS

NO SCALE

RSP D74 DATED JULY 15, 2016 SUPPLEMENTS THE STANDARD PLANS BOOK DATED 2010.

REVISED STANDARD PLAN RSP D74

6-20-16

Dist	COUNTY	ROUTE	POST MILES TOTAL PROJECT	SHEET No.	TOTAL SHEETS
04	Ala	580	41.5	99	123

Gregory A. Balzer
LICENSED LANDSCAPE ARCHITECT

July 19, 2013
PLANS APPROVAL DATE

THE STATE OF CALIFORNIA OR ITS OFFICERS OR AGENTS SHALL NOT BE RESPONSIBLE FOR THE ACCURACY OR COMPLETENESS OF SCANNED COPIES OF THIS PLAN SHEET.

LICENSED LANDSCAPE ARCHITECT — Gregory A. Balzer 2576 — 02-28-15 Renewal Date — 7-19-13 Date — STATE OF CALIFORNIA

TO ACCOMPANY PLANS DATED 6-7-16

A

AB	AGGREGATE BASE
ABS	ACRYLONITRILE-BUTADIENE-STYRENE
AC	ASPHALT CONCRETE
ACC	ARMOR-CLAD CONDUCTORS
Adj	ADJACENT/ADJUSTABLE
AIC	AUXILIARY IRRIGATION CONTROLLER
Alt	ALTERNATIVE
AMEND	AMENDMENT
ARV	AIR RELEASE VALVE
AUTO	AUTOMATIC
AUX	AUXILIARY
AVB	ATMOSPHERIC VACUUM BREAKER

B

B&B	BALLED AND BURLAPPED
B/B	BRASS/BRONZE
B/B/PL	BRASS/BRONZE/PLASTIC
B/PL	BRASS/PLASTIC
BFM	BONDED FIBER MATRIX
Bit Ctd	BITUMINOUS COATED
BP	BOOSTER PUMP
BPA	BACKFLOW PREVENTER ASSEMBLY
BPE	BACKFLOW PREVENTER ENCLOSURE
BV	BALL VALVE

C

C	CONDUIT
CAP	CORRUGATED ALUMINUM PIPE
CARV	COMBINATION AIR RELEASE VALVE
CB	COUPLING BAND
CCA	CAM COUPLER ASSEMBLY
CEC	CONTROLLER ENCLOSURE CABINET
CHDPE	CORRUGATED HIGH DENSITY POLYETHYLENE
CL	CHAIN LINK
CNC	CONTROL AND NEUTRAL CONDUCTORS
Conc	CONCRETE
CP	COPPER PIPE
CS	COMPOST SOCK
CSP	CORRUGATED STEEL PIPE
CST	CENTER STRIP
CV	CHECK VALVE

D

Dia	DIAMETER
DIP	DUCTILE IRON PIPE
DIT	DRIP IRRIGATION TUBING
DG	DECOMPOSED GRANITE
DN	DIAMETER NOMINAL
DVA	DRIP VALVE ASSEMBLY

E

EC	EROSION CONTROL
ECTC	EROSION CONTROL TECHNOLOGY COUNCIL
Elect	ELECTRIC/ELECTRICAL
Elev	ELEVATION
ELL	ELBOW
ENCL	ENCLOSURE
EP	EDGE OF PAVEMENT
ES	EDGE OF SHOULDER
EST	END STRIP
ESTB	ESTABLISHMENT
ETW	EDGE OF TRAVELED WAY

F

F	FULL CIRCLE
F/P	FULL/PART CIRCLE
FCV	FLOW CONTROL VALVE
FERT	FERTILIZER
FG	FINISHED GRADE
FH	FLEXIBLE HOSE
FIPT	FEMALE IRON PIPE THREAD
FIS	FERTILIZER INJECTOR SYSTEM
FL	FLOW LINE
FR	FIBER ROLL
FS	FLOW SENSOR
FSC	FLOW SENSOR CABLE
FV	FLUSH VALVE

G

Galv	GALVANIZED
GARV	GARDEN VALVE
GARVA	GARDEN VALVE ASSEMBLY
GM	GRAVEL MULCH
GPH	GALLONS PER HOUR
GPM	GALLONS PER MINUTE
GSP	GALVANIZED STEEL PIPE
GV	GATE VALVE

H

H	HALF CIRCLE
HDPE	HIGH DENSITY POLYETHYLENE
HP	HORSEPOWER/HINGE POINT
HPL	HIGH PRESSURE LINE
Hwy	HIGHWAY

I

IC	IRRIGATION CONTROLLER
ICC	IRRIGATION CONTROLLER(S) IN CONTROLLER ENCLOSURE CABINET
ID	INSIDE DIAMETER
IFS	IRRIGATION FILTRATION SYSTEM
IPS	IRON PIPE SIZE
IPT	IRON PIPE THREAD
Irr	IRRIGATION

L

L	LENGTH

M

Max	MAXIMUM
MBGR	METAL BEAM GUARD RAILING
MCV	MANUAL CONTROL VALVE
MIC	MASTER IRRIGATION CONTROLLER
Min	MINIMUM
MIPT	MALE IRON PIPE THREAD
Misc	MISCELLANEOUS
Mtl	MATERIAL
MVP	MAINTENANCE VEHICLE PULLOUT

N

NCN	NO COMMON NAME
NL	NOZZLE LINE
No.	NUMBER
NPT	NATIONAL PIPE THREAD

O

O/C	ON CENTER
OD	OUTSIDE DIAMETER
OL	OVERLAP

P

P	PART CIRCLE
PB	PULL BOX
PCC	PORTLAND CEMENT CONCRETE
PE	POLYETHYLENE
Pkt	PACKET
PL	PLASTIC
PLS	PURE LIVE SEED
PLT	PLANT/PLANTING
PLT ESTB	PLANT ESTABLISHMENT
PM	POST MILE
PR	PRESSURE RATED
PRLV	PRESSURE RELIEF VALVE
PRV	PRESSURE REGULATING VALVE
PVC	POLYVINYL CHLORIDE
Pvmt	PAVEMENT

Q

Q	QUARTER CIRCLE
QCV	QUICK COUPLING VALVE

R

R	RADIUS
RCP	REINFORCED CONCRETE PIPE
RCV	REMOTE CONTROL VALVE
RCVM	REMOTE CONTROL VALVE (MASTER)
RCVMF	REMOTE CONTROL VALVE (MASTER) W/FLOW SENSOR
RCVP	REMOTE CONTROL VALVE W/PRESSURE REGULATOR
RCW	RECYCLED WATER
RECP	ROLLED EROSION CONTROL PRODUCT
REQ	REQUIRED
RICS	REMOTE IRRIGATION CONTROL SYSTEM
R/W	RIGHT OF WAY

S

S	SLIP
SCH	SCHEDULE
SF	STATE-FURNISHED
Shld	SHOULDER
Sq	SQUARE
SST	SIDE STRIP
Sta	STATION
Std	STANDARD
SW	SIDEWALK/SOUND WALL

T

T	THIRD CIRCLE/THREAD
TLS	TRUCK LOADING STANDPIPE
TQ	THREE QUARTER CIRCLE
TRM	TURF REINFORCEMENT MAT
TT	TWO-THIRDS CIRCLE
TWSA	TREE WELL SPRINKLER ASSEMBLY
Typ	TYPICAL

U

UG	UNDERGROUND

W

W	WIDTH
W/	WITH
WM	WATER METER
WS	WYE STRAINER
WSA	WYE STRAINER ASSEMBLY
WSP	WELDED STEEL PIPE
WWM	WELDED WIRE MESH

NOTE:

For additional abbreviations, see Standard Plans A10A and A10B.

STATE OF CALIFORNIA
DEPARTMENT OF TRANSPORTATION

LANDSCAPE AND EROSION CONTROL ABBREVIATIONS

NO SCALE

RSP H1 DATED JULY 19, 2013 SUPERSEDES STANDARD PLAN H1 DATED MAY 20, 2011 - PAGE 218 OF THE STANDARD PLANS BOOK DATED 2010.

REVISED STANDARD PLAN RSP H1

2010 REVISED STANDARD PLAN RSP H1

6-28-13

Dist	COUNTY	ROUTE	POST MILES TOTAL PROJECT	SHEET No.	TOTAL SHEETS
04	Ala	580	41.5	100	123

LICENSED LANDSCAPE ARCHITECT

November 15, 2013
PLANS APPROVAL DATE

Gregory A. Balzer 2576 LICENSED LANDSCAPE ARCHITECT STATE OF CALIFORNIA
02-28-15 (Expiration) Date
11-15-13 Date

THE STATE OF CALIFORNIA OR ITS OFFICERS OR AGENTS SHALL NOT BE RESPONSIBLE FOR THE ACCURACY OR COMPLETENESS OF SCANNED COPIES OF THIS PLAN SHEET.

TO ACCOMPANY PLANS DATED 6-7-16

EXISTING	NEW	ITEM DESCRIPTION
		WATER METER (WM)
		BACKFLOW PREVENTER ASSEMBLY (BPA)
		BACKFLOW PREVENTER ENCLOSURE (BPE)
		BOOSTER PUMP (BP)
		TRUCK LOADING STANDPIPE (TLS)
	FS	FLOW SENSOR (FS)
		MASTER IRRIGATION CONTROLLER (MIC)
		AUXILIARY IRRIGATION CONTROLLER (AIC)
		IRRIGATION CONTROLLER (IC) IRRIGATION CONTROLLER (IC) (BATTERY) IRRIGATION CONTROLLER (IC) (SOLAR) IRRIGATION CONTROLLER (IC) (TWO WIRE) IRRIGATION CONTROLLER(S) IN CONTROLLER ENCLOSURE CABINET (ICC)
acc	ACC	ARMOR-CLAD CONDUCTORS (ACC)
cnc	CNC	CONTROL AND NEUTRAL CONDUCTORS (CNC)
		IRRIGATION CONDUIT
		EXTEND IRRIGATION CONDUIT
dip	DIP	DUCTILE IRON PIPE (SUPPLY LINE) (MAIN) (DIP)
		GALVANIZED STEEL PIPE (SUPPLY LINE) (MAIN) (GSP)
		GALVANIZED STEEL PIPE (SUPPLY LINE) (LATERAL) (GSP)
		PLASTIC PIPE (SUPPLY LINE) (MAIN)
		PLASTIC PIPE (SUPPLY LINE) (LATERAL)
cp	CP	COPPER PIPE (SUPPLY LINE)
dit	DIT	DRIP IRRIGATION TUBING
		REMOTE CONTROL VALVE (RCV) REMOTE CONTROL VALVE (MASTER) (RCVM) REMOTE CONTROL VALVE (MASTER) W/FLOW METER (RCVMF)
P	P	REMOTE CONTROL VALVE W/PRESSURE REGULATOR (RCVP)
		EXISTING MANUAL CONTROL VALVE (MCV)
V	V	DRIP VALVE ASSEMBLY (DVA)
Y	Y	WYE STRAINER ASSEMBLY (WSA)

EXISTING	NEW	ITEM DESCRIPTION
		GATE VALVE (GV)
		BALL VALVE (BV)
		QUICK COUPLING VALVE (QCV)
		CAM COUPLER ASSEMBLY (CCA)
		GARDEN VALVE ASSEMBLY (GARVA)
		PRESSURE REGULATING VALVE (PRV)
		PRESSURE RELIEF VALVE (PRLV)
		FLOW CONTROL VALVE (FCV)
		COMBINATION AIR RELEASE VALVE (CARV)
		CHECK VALVE (CV)
		FLUSH VALVE (FV)
		EXISTING NOZZLE LINE W/TURNING UNION
		EXISTING IRRIGATION SYSTEM
		EXISTING IRRIGATION SYSTEM TO BE REMOVED
		CHAIN LINK GATE
		QUICK COUPLING VALVE W/SPRINKLER PROTECTOR
3	3	SPRINKLER W/SPRINKLER PROTECTOR
	C	CONNECT TO EXISTING SYSTEM
		CAP
		CAP EXISTING
	FR	FIBER ROLL
	CS	COMPOST SOCK

RCV SIZE
IRRIGATION CONTROLLER
CONTROLLER STATION
VALVE IN PARALLEL (IF APPLICABLE)
GPM
QUANTITY OF SPRINKLERS (WHEN SHOWN)

* 2½"-A-2b-40-60

VALVE CODE

* VALVE CODES FOR EXISTING VALVES ARE SHOWN IN A DASHED ENCLOSURE.

STATE OF CALIFORNIA
DEPARTMENT OF TRANSPORTATION

LANDSCAPE AND EROSION CONTROL SYMBOLS

NO SCALE

RSP H2 DATED NOVEMBER 15, 2013 SUPERSEDES RSP H2 DATED JULY 19, 2013 AND STANDARD PLAN H2 DATED MAY 20, 2011 - PAGE 219 OF THE STANDARD PLANS BOOK DATED 2010.

REVISED STANDARD PLAN RSP H2

2010 REVISED STANDARD PLAN RSP H2

10-9-13