Dist	COUNTY	ROUTE	POST MILES TOTAL PROJECT	SHEET No.	TOTAL SHEETS
06	Ker	5	62.5/73.1	2	213

REGISTERED CIVIL ENGINEER 06-10-14 DATE

6-16-14
PLANS APPROVAL DATE

REGISTERED PROFESSIONAL ENGINEER MAHMOOD A SULTAN No. 76344 Exp. 12-31-14 CIVIL STATE OF CALIFORNIA

THE STATE OF CALIFORNIA OR ITS OFFICERS OR AGENTS SHALL NOT BE RESPONSIBLE FOR THE ACCURACY OR COMPLETENESS OF SCANNED COPIES OF THIS PLAN SHEET.

NOTES:

1. FOR ACCURATE RIGHT OF WAY DATA, CONTACT RIGHT OF WAY ENGINEERING AT THE DISTRICT OFFICE.
2. DIMENSIONS OF THE PAVEMENT STRUCTURES (STRUCTURAL SECTIONS) ARE SUBJECT TO TOLERANCES SPECIFIED IN THE STANDARD SPECIFICATIONS.
3. SUPERELEVATION AS SHOWN OR AS DIRECTED BY THE ENGINEER.
4. UTILITY OWNERSHIP ON THIS PROJECT:
   CALL BOXES - SERVICE AUTHORITIES FOR FREEWAY EMERGENCIES (SAFE).
5. REFER TO CONSTRUCTION DETAILS AND SUMMARY OF QUANTITIES SHEETS FOR GRIND EXISTING CONCRETE PAVEMENT LOCATIONS AND QUANTITIES.
6. REFER TO SUMMARY OF QUANTITIES SHEET FOR REMOVE DIKE AND PLACE HMA DIKE, DIKE TYPES, LOCATIONS, AND QUANTITIES.
7. REFER TO SUMMARY OF QUANTITIES SHEETS FOR MIDWEST GUARDRAIL SYSTEM LOCATIONS AND QUANTITIES.
8. REFER TO CONSTRUCTION DETAIL SHEETS FOR TERMINAL JOINTS AND EXPANSION JOINTS.
9. REFER TO STAGE CONSTRUCTION AND SUMMARY OF QUANTITIES SHEETS FOR CRCP ~~AND CRCP (RSC)~~ 3 LOCATIONS AND QUANTITIES.
10. REFER TO SUMMARY OF QUANTITIES SHEETS FOR STBB AND DTBB LOCATIONS AND QUANTITIES.
11. REFER TO CONSTRUCTION DETAIL AND SUMMARY OF QUANTITIES SHEETS FOR RUMBLE STRIP TYPES, LOCATIONS, AND QUANTITIES.
12. REFER TO SUMMARY OF QUANTITIES SHEET FOR RUMBLE STRIP TYPE, LOCATIONS, AND QUANTITIES.
13. FOR APPROACH SLAB STRUCTURAL SECTION, SEE STRUCTURE PLANS.

ABBREVIATIONS:

STBB	SINGLE THRIE BEAM BARRIER
DTBB	DOUBLE THRIE BEAM BARRIER
RSC	RAPID STRENGTH CONCRETE

PAVEMENT CLIMATE REGION

INLAND VALLEY

DESIGN DESIGNATION

2014 ADT = 36,500 D = 58%
2034 ADT = 59,500 T = 33%
2034 DHV = 10,100 V = 70 mph

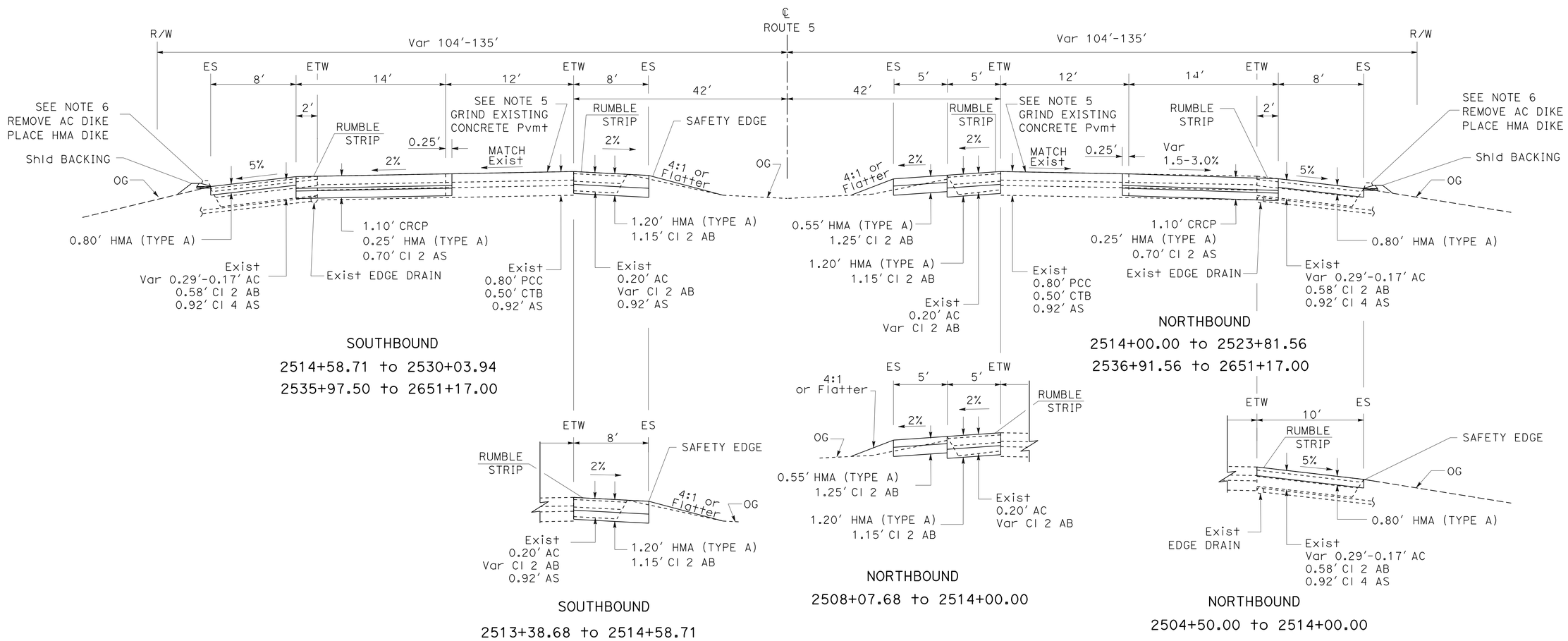

ROUTE 5

TYPICAL CROSS SECTIONS X-1

NO SCALE

3 **REPLACED PER ADDENDUM No. 3 DATED OCTOBER 30, 2014**

EXISTING UTILITY FACILITIES HAVE NOT BEEN INCLUDED ON THESE PLANS

STATE OF CALIFORNIA - DEPARTMENT OF TRANSPORTATION
Caltrans DESIGN
FUNCTIONAL SUPERVISOR DAVID SANGHA
CALCULATED-DESIGNED BY MAHMOOD SULTAN
CHECKED BY CARMELITA BELLE
REVISED BY
DATE REVISED

LAST REVISION 06-09-14
DATE PLOTTED => 30-OCT-2014
TIME PLOTTED => 09:26

Dist	COUNTY	ROUTE	POST MILES TOTAL PROJECT	SHEET No.	TOTAL SHEETS
06	Ker	5	62.5/73.1	3	213

REGISTERED CIVIL ENGINEER 06-10-14 DATE

6-16-14
PLANS APPROVAL DATE

REGISTERED PROFESSIONAL ENGINEER MAHMOOD A SULTAN No. 76344 Exp. 12-31-14 CIVIL STATE OF CALIFORNIA

THE STATE OF CALIFORNIA OR ITS OFFICERS OR AGENTS SHALL NOT BE RESPONSIBLE FOR THE ACCURACY OR COMPLETENESS OF SCANNED COPIES OF THIS PLAN SHEET.

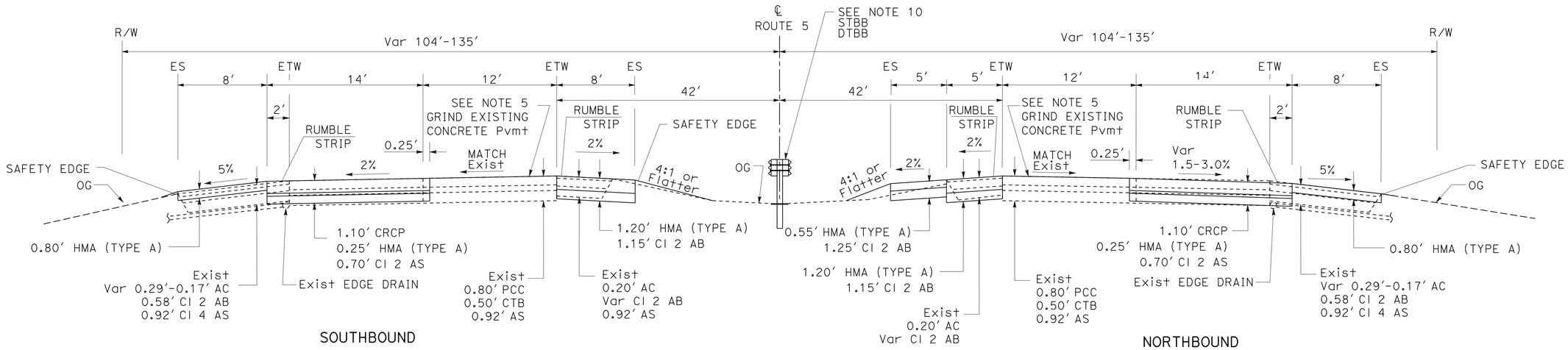

SOUTHBOUND

2651+17.00 to 2977+00.00

NORTHBOUND

2651+17.00 to 2977+00.00

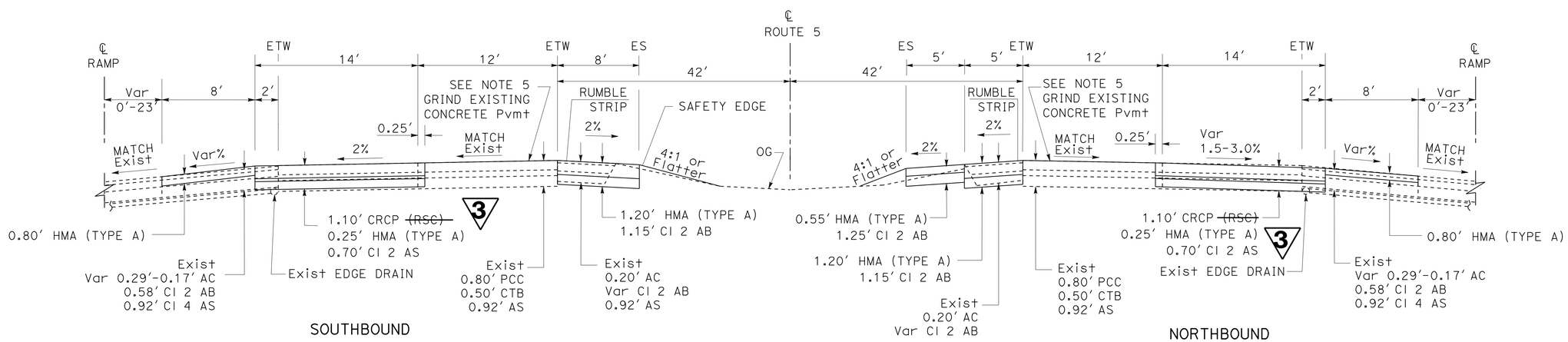

SOUTHBOUND

2530+03.94 to 2535+97.50

ROUTE 5

NORTHBOUND

2523+81.56 to 2536+91.56

3 **REPLACED PER ADDENDUM No. 3 DATED OCTOBER 30, 2014**

TYPICAL CROSS SECTIONS X-2

NO SCALE

STATE OF CALIFORNIA - DEPARTMENT OF TRANSPORTATION
Caltrans
DESIGN

FUNCTIONAL SUPERVISOR: DAVID SANGHA

CALCULATED-DESIGNED BY: CARMELITA BELLE
CHECKED BY: MAHMOOD SULTAN

REVISED BY
DATE REVISED

LAST REVISION 06-05-14
DATE PLOTTED => 30-OCT-2014
TIME PLOTTED => 09:26

Dist	COUNTY	ROUTE	POST MILES TOTAL PROJECT	SHEET No.	TOTAL SHEETS
06	Ker	5	62.5/73.1	6	213

REGISTERED CIVIL ENGINEER 06-10-14 DATE

6-16-14
PLANS APPROVAL DATE

REGISTERED PROFESSIONAL ENGINEER
MAHMOOD A SULTAN
No. 76344
Exp. 12-31-14
CIVIL
STATE OF CALIFORNIA

THE STATE OF CALIFORNIA OR ITS OFFICERS OR AGENTS SHALL NOT BE RESPONSIBLE FOR THE ACCURACY OR COMPLETENESS OF SCANNED COPIES OF THIS PLAN SHEET.

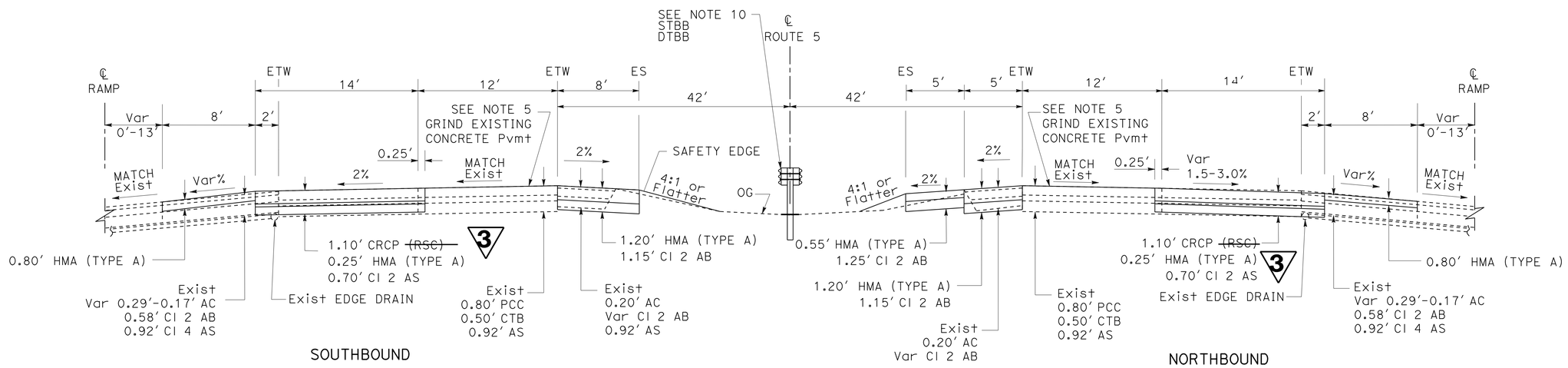

ROUTE 5

3 **REPLACED PER ADDENDUM No. 3 DATED OCTOBER 30, 2014**

TYPICAL CROSS SECTIONS X-5

NO SCALE

STATE OF CALIFORNIA - DEPARTMENT OF TRANSPORTATION
Caltrans
DESIGN

FUNCTIONAL SUPERVISOR: DAVID SANGHA
CALCULATED-DESIGNED BY: CARMELITA BELLE
CHECKED BY: MAHMOOD SULTAN
REVISED BY
DATE REVISED

LAST REVISION 06-05-14
DATE PLOTTED => 30-OCT-2014
TIME PLOTTED => 09:26

Dist	COUNTY	ROUTE	POST MILES TOTAL PROJECT	SHEET No.	TOTAL SHEETS
06	Ker	5	62.5/73.1	9	213

REGISTERED CIVIL ENGINEER 06-10-14 DATE

6-16-14
PLANS APPROVAL DATE

REGISTERED PROFESSIONAL ENGINEER MAHMOOD A SULTAN No. 76344 Exp. 12-31-14 CIVIL STATE OF CALIFORNIA

THE STATE OF CALIFORNIA OR ITS OFFICERS OR AGENTS SHALL NOT BE RESPONSIBLE FOR THE ACCURACY OR COMPLETENESS OF SCANNED COPIES OF THIS PLAN SHEET.

NOTES:

1. EXISTING UTILITY FACILITIES ARE NOT SHOWN ON THESE PLANS.
2. REFER TO STRUCTURE PLANS FOR APPROACH SLABS.
3. REFER TO CONSTRUCTION DETAILS C-2 FOR CRCP EXPANSION JOINT, TYPE WF.
4. FOR THE PAVEMENT TERMINAL JOINT DETAILS, SEE STANDARD PLAN RSP P31A. FOR PAVEMENT TERMINAL JOINT TYPE, SEE PROJECT PLANS.
5. FOR ADDITIONAL DETAILS ON REINFORCEMENT MEMBER QUANTITIES OF THE WIDE FLANGE BEAM TERMINAL AND PAVEMENT EXPANSION JOINT TYPE WF, SEE STANDARD PLAN RSP P32B.
6. FOR CRCP WIDE FLANGE BEAM TERMINAL DETAIL, SEE STANDARD PLAN RSP P32A.
7. FOR THE ADJACENT PAVEMENT OR STRUCTURE APPROACH SLAB INFORMATION, SEE PROJECT PLANS.

LEGEND:

APPROACH SLAB

3 JOINT ~~BRIDGE~~ LOCATIONS (N)

DIRECTION	POST MILE	LOCATION/ BRIDGE NAME (No.)	BRIDGE LENGTH	CRCP (TERMINAL JOINT, TYPE E)	CRCP (EXPANSION JOINT, TYPE WF)	JOINT SEAL (TYPE B)	CRCP (WIDE FLANGE BEAM TERMINAL)	JOINT SEAL (TYPE A)
			LF	LF	LF	LF	LF	LF
NORTHBOUND	PM 71.56	ROUTE 5/ KERN Riv FLOOD CONTROL UC (Br No. 50-0314R)	76.0	28	14	28	14	14
SOUTHBOUND	PM 71.56	ROUTE 5/ KERN Riv FLOOD CONTROL UC (Br No. 50-0314L)	76.0	28	14	28	14	14
NORTHBOUND	PM 71.66	ROUTE 5/ KERN Riv FLOOD CANAL (Br No. 50-0315R)	213.3	28	28	28	14	14
SOUTHBOUND	PM 71.64	ROUTE 5/ KERN Riv FLOOD CANAL (Br No. 50-0315L)	213.3	28	28	28	14	14
NORTHBOUND	PM 62.76	CRCP/Exist JPCP		12				
SOUTHBOUND	PM 62.76	CRCP/Exist JPCP		12				
NORTHBOUND	PM 72.44	CRCP/Exist JPCP		12				
SOUTHBOUND	PM 72.44	CRCP/Exist JPCP		12				

(N) NOT A SEPARATE PAY ITEM, FOR INFORMATION ONLY.

3

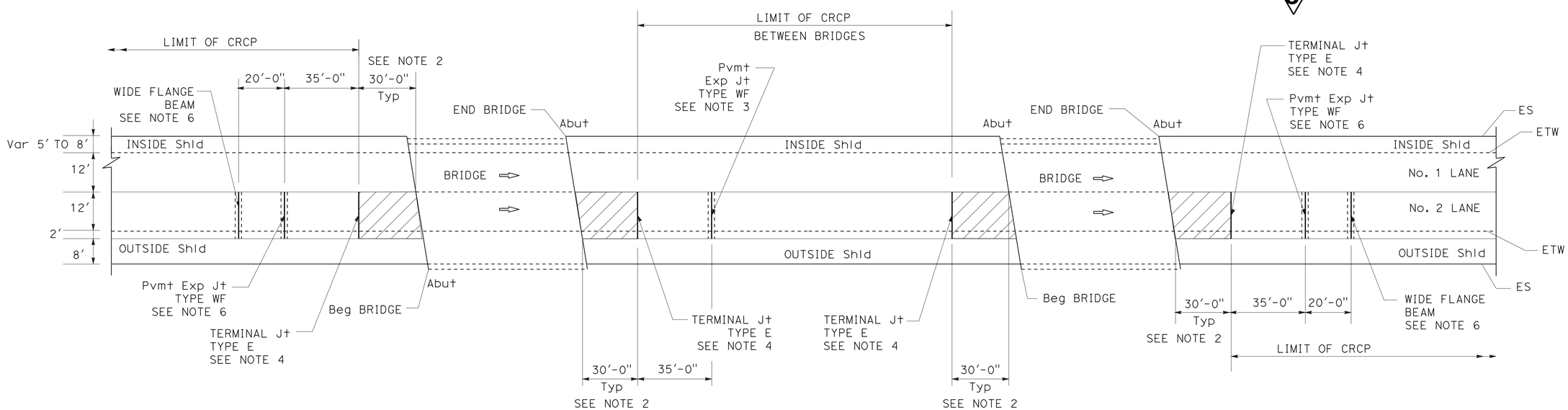

TYPICAL LOCATION OF WIDE FLANGE BEAM AND JOINTS DETAIL

PLAN VIEW

3 REPLACED PER ADDENDUM No. 3 DATED OCTOBER 30, 2014

CONSTRUCTION DETAILS C-3

NO SCALE

STATE OF CALIFORNIA - DEPARTMENT OF TRANSPORTATION
Caltrans DESIGN
FUNCTIONAL SUPERVISOR DAVID SANGHA
CALCULATED-DESIGNED BY CARMELITA BELLE
CHECKED BY MAHMOOD SULTAN
REVISED BY
DATE REVISED

LAST REVISION 06-13-14 | DATE PLOTTED => 30-OCT-2014 | TIME PLOTTED => 09:26

Dist	COUNTY	ROUTE	POST MILES TOTAL PROJECT	SHEET No.	TOTAL SHEETS
06	Ker	5	62.5/73.1	25	213

REGISTERED CIVIL ENGINEER 06-10-14 DATE

6-16-14
PLANS APPROVAL DATE

REGISTERED PROFESSIONAL ENGINEER MAHMOOD A SULTAN No. 76344 Exp. 12-31-14 CIVIL STATE OF CALIFORNIA

THE STATE OF CALIFORNIA OR ITS OFFICERS OR AGENTS SHALL NOT BE RESPONSIBLE FOR THE ACCURACY OR COMPLETENESS OF SCANNED COPIES OF THIS PLAN SHEET.

SUMMARY ORDER OF WORK

	SHEET No.	STAGE/PHASE	LOCATION	CONSTRUCTION
SEGMENT 1			LERDO Hwy TO Rte 46	SLAB REPLACEMENT FOR NB AND SB LANE 1 TO BE DONE BEFORE STAGE 1 BEGINS, AND GRIND ENTIRE NB AND SB LANE 1.
	(SC-2 TO SC-4)	STAGE 1, PHASE 1	LERDO Hwy TO Rte 46	NB OUTSIDE Shld & SB INSIDE Shld. REPLACE THRIE BEAM THIS STAGE.
	(SC-5 TO SC-7)	STAGE 1, PHASE 2	LERDO Hwy TO Rte 46	WIDEN NB OUTSIDE Shld BEFORE Rte 46 NB OFF-RAMP. WIDEN Rte 46 SB ON-RAMP WITH SB OUTSIDE Shld. WIDEN SB OUTSIDE Shld BEFORE LERDO Hwy SB OFF-RAMP. WIDEN NB OUTSIDE Shld NEAR LERDO Hwy NB ON-RAMP. REPLACE THRIE BEAM THIS STAGE.
	(SC-8 TO SC-10)	STAGE 2	WSC TO Rte 46	MEDIAN SHOULDER DETOUR AND CROSSOVERS Nos. 2,3,4,5
	(SC-11)	STAGE 3, PHASE 1	WSC TO Rte 46	SB LANE 2 AT Rte 46 SB ON-RAMP AREA
	(SC-12 TO SC-14)	STAGE 3, PHASE 2	WSC TO Rte 46	SB LANE 2 & OUTSIDE Shld. REPLACE THRIE BEAM THIS STAGE.
	(SC-15)	STAGE 4, PHASE 1	WSC TO Rte 46	NB LANE 2 AT Rte 46 NB OFF-RAMP AREA
	(SC-16 TO SC-18)	STAGE 4, PHASE 2	WSC TO Rte 46	NB LANE 2
		STAGE 4, PHASE 3	WSC TO Rte 46	REMOVE CROSSOVER Nos. 2, 4 and 5
SEGMENT 2	(SC-19 TO SC-20)	STAGE 5	LERDO Hwy TO WSC	MEDIAN SHOULDER DETOUR AND CROSSOVER No. 1
	(SC-21)	STAGE 6, PHASE 1	LERDO Hwy TO WSC	SB LANE 2, LERDO Hwy SB OFF-RAMP AREA & HMA OUTSIDE Shld
	(SC-22 TO SC-23)	STAGE 6, PHASE 2	LERDO Hwy TO WSC	SB LANE 2 & OUTSIDE Shld
	(SC-24)	STAGE 7, PHASE 1	LERDO Hwy TO WSC	NB LANE 2, LERDO Hwy NB ON-RAMP AREA
	(SC-25 TO SC-26)	STAGE 7, PHASE 2	LERDO Hwy TO WSC	NB LANE 2
	(SC-27 TO SC-30)	STAGE 8	LERDO Hwy TO Rte 46	OBLITERATE MEDIAN DETOUR AND LEAVE IN PLACE, REMOVE CROSSOVERS, REPLACE THRIE BEAM & MGS THIS STAGE, AND INSTALL NB & SB RUMBLE STRIPS FOR BOTH INSIDE & OUTSIDE Shld.

3

LEGEND:

- EXISTING ROADBED
- PERMANENT CONSTRUCTION THIS STAGE
- OBLITERATE IN PLACE
- REMOVE ROADWAY OR STRUCTURE
- COLD PLANE AC PAVEMENT
- (#) CONSTRUCTION PHASE FEATURE
- ←(#) TRAFFIC DIRECTION (NUMBER OF LANES)

ABBREVIATIONS:

LL	LANE LINE
TRK	TEMPORARY RAILING (TYPE K)
WSC	WEST SIDE CANAL

NOTES:

1. EXISTING UTILITY FACILITIES ARE NOT SHOWN ON THESE PLANS.
2. WORK NOT NECESSARY FOR STAGING OPERATION CAN BE DONE AT ANYTIME AND IS NOT SHOWN.
3. FOR DETAILS OF TRAFFIC HANDLING DURING STAGE CONSTRUCTION, SEE TRAFFIC HANDLING PLANS.

CURVE DATA

No. ⊕	R	Δ	T	L
1	26,000′	03°38′00"	824.65′	1648.75′
2	10,963′	06°48′18"	651.80′	1302.06′

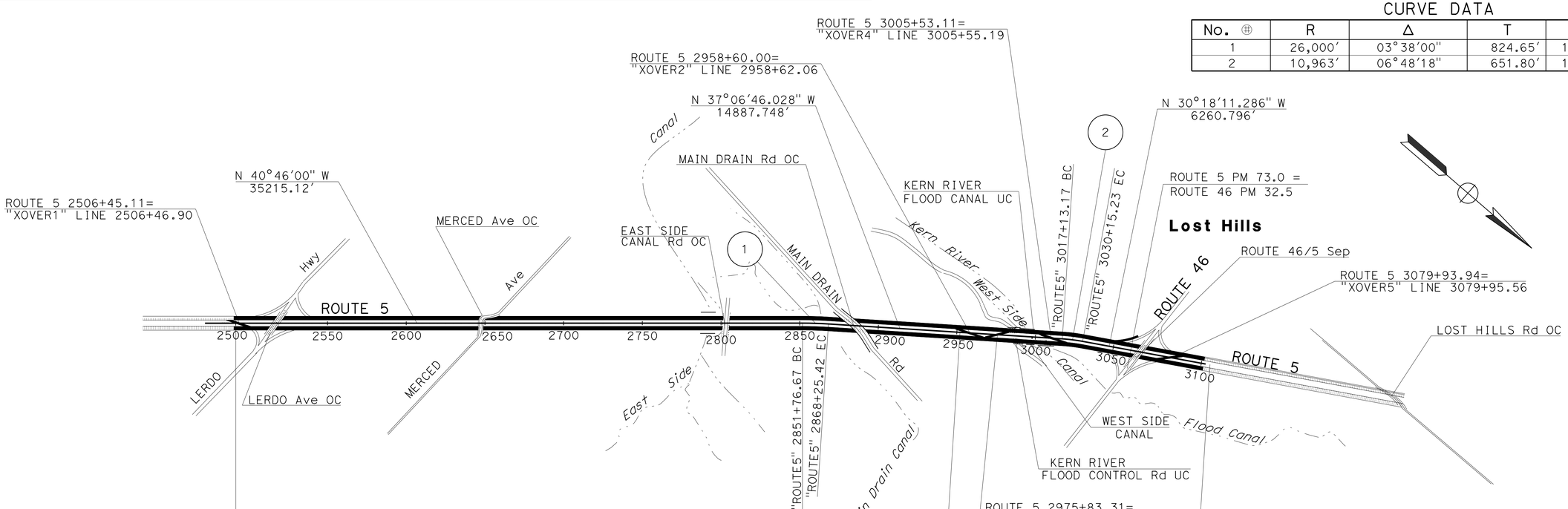

STAGE CONSTRUCTION PLAN

3 **REPLACED PER ADDENDUM No. 3 DATED OCTOBER 30, 2014**

APPROVED FOR STAGE CONSTRUCTION WORK ONLY

NO SCALE

SC-1

STATE OF CALIFORNIA - DEPARTMENT OF TRANSPORTATION
Caltrans® DESIGN

FUNCTIONAL SUPERVISOR: DAVID SANGHA
CALCULATED-DESIGNED BY: MAHMOOD SULTAN
CHECKED BY: CARMELITA BELLE
REVISED BY / DATE REVISED

LAST REVISION 06-10-14
DATE PLOTTED => 30-OCT-2014
TIME PLOTTED => 09:26

Dist	COUNTY	ROUTE	POST MILES TOTAL PROJECT	SHEET No.	TOTAL SHEETS
06	Ker	5	62.5/73.1	101	213

REGISTERED CIVIL ENGINEER 06-10-14 DATE

6-16-14
PLANS APPROVAL DATE

REGISTERED PROFESSIONAL ENGINEER MAHMOOD A SULTAN No. 76344 Exp. 12-31-14 CIVIL STATE OF CALIFORNIA

THE STATE OF CALIFORNIA OR ITS OFFICERS OR AGENTS SHALL NOT BE RESPONSIBLE FOR THE ACCURACY OR COMPLETENESS OF SCANNED COPIES OF THIS PLAN SHEET.

NOTES:

(N) NOT A SEPARATE PAY ITEM, FOR INFORMATION ONLY

ROADWAY QUANTITIES

SHEET No.	STAGE No.-PHASE No.	LOCATION/DESCRIPTION	HMA (TYPE A)	CRCP	CLASS 2 AGGREGATE BASE	CLASS 2 AGGREGATE SUBBASE	TACK COAT	SAFETY EDGE (N)	ROADWAY EXCAVATION	REMOVE CONCRETE PAVEMENT	SHOULDER BACKING	EMBANKMENT (N)	GRIND EXISTING CONCRETE PAVEMENT	OBLITERATE SURFACING	Shld RUMBLE STRIP (HMA GROUND-IN INDENTATIONS)	Shld RUMBLE STRIP (Conc Pvmt GROUND-IN INDENTATIONS)	SPALL REPAIR (POLYESTER CONCRETE)	ISOLATION JOINT SEAL (PREFORMED COMPRESSION)	LEAN CONCRETE BASE
			TON	CY	CY	CY	TON	TON	CY	CY	TON	CY	SQYD	SQYD	STA	STA	SQYD	LF	CY
SC-2 to SC-4	S1-P1	NB, Rte 5 OUTSIDE Shld, STA 2504+50.00 to 3076+90.00	33,223			1051	23.76	206	16,893		1550								
SC-2 to SC-4	S1-P1	SB, Rte 5 INSIDE Shld, STA 2513+38.00 to 3071+24.00	38,807		18,931	1013	30.87	199	38,686		1511								
SC-5, SC-6 & SC-31	S1-P2	NB, Rte 5 OUTSIDE Shld Widening/Ramp, S/O NB OFF-RAMP to Rte 46, STA 3039+56.00 to 3051+27.00	639		445		0.46		772										
SC-5, SC-6 & SC-32	S1-P2	SB, Rte 5 ON-RAMP from Rte 46 OUTSIDE Shld, STA 3037+81.00 to 3058+27.00	1,185				0.85		606										
SC-5, SC-6 & SC-32	S1-P2	SB, Rte 5 OUTSIDE Shld Widening/Ramp, S/O SB ON-RAMP from Rte 46, STA 3037+81.00 to 3058+27.00	1,017		714		0.74		1,234		56								
SC-7 & SC-33	S1-P2	NB, Rte 5 OUTSIDE Shld Widening, N/O NB ON-RAMP from LERDO HWY , STA 2527+26.00 to 2541+10.00	615		617		0.42		950										
SC-7, SC-34	S1-P2	SB, Rte 5 OFF-RAMP to Lerdo HWY OUTSIDE Shld STA 2528+56 .00 to 2540+27.00	1,100		447		0.79		1,010		32								
SC-8 to SC-10	S2	NB, MEDIAN DETOUR, STA 2960+00.00 to 3078+79.00	11,750		10,446		4.64	44	10,356			6415							
SC-8	S2	Rte 5 MEDIAN CROSSOVER #2, STA 2954+42.89 to 2962+04.32	347		404		0.24		782			267							
SC-8	S2	Rte 5 MEDIAN CROSSOVER #3, STA 2972+70.25 to 2980+19.82	360		419		0.25		304			623							
SC-9	S2	Rte 5 MEDIAN CROSSOVER #4, STA 3001+07.48 to 3008+90.18	365		424		0.25		385			450							
SC-10	S2	Rte 5 MEDIAN CROSSOVER #5, STA 3076+70.81 to 3086+23.00	443		515		0.31		206			615							
SC-11	S3-P1	SB, Rte 5 LANE #2, STA 3043+25.00 to 3068+34.00	647	1457		927	0.50		1,804	911								2509	
SC-11	S3-P1	SB, Rte 5 OUTSIDE Shld STA 3058+27.00 to 3068+34.00	467				0.34		239		27								
		SUBTOTAL Q-1	90,965	1457	33,362	2991	64.42	449	74,227	911	3176	8370	0	0	0	0	0	2509	

3

3 REPLACED PER ADDENDUM No. 3 DATED OCTOBER 30, 2014

SUMMARY OF QUANTITIES
Q-1

STATE OF CALIFORNIA - DEPARTMENT OF TRANSPORTATION
Caltrans DESIGN

FUNCTIONAL SUPERVISOR: DAVID SANGHA
CALCULATED-DESIGNED BY: CARMELITA BELLE
CHECKED BY: MAHMOOD SULTAN
REVISED BY
DATE REVISED

LAST REVISION 06-19-14
DATE PLOTTED => 30-OCT-2014
TIME PLOTTED => 09:26

Dist	COUNTY	ROUTE	POST MILES TOTAL PROJECT	SHEET No.	TOTAL SHEETS
06	Ker	5	62.5/73.1	102	213

REGISTERED CIVIL ENGINEER 06-10-14 DATE

6-16-14
PLANS APPROVAL DATE

REGISTERED PROFESSIONAL ENGINEER MAHMOOD A SULTAN No. 76344 Exp. 12-31-14 CIVIL STATE OF CALIFORNIA

THE STATE OF CALIFORNIA OR ITS OFFICERS OR AGENTS SHALL NOT BE RESPONSIBLE FOR THE ACCURACY OR COMPLETENESS OF SCANNED COPIES OF THIS PLAN SHEET.

NOTES:

(N) NOT A SEPARATE PAY ITEM, FOR INFORMATION ONLY

ROADWAY QUANTITIES

SHEET No.	STAGE No.-PHASE No.	LOCATION/DESCRIPTION	HMA (TYPE A)	CRCP	CLASS 2 AGGREGATE BASE	CLASS 2 AGGREGATE SUBBASE	TACK COAT	SAFETY EDGE (N)	ROADWAY EXCAVATION	REMOVE CONCRETE PAVEMENT	SHOULDER BACKING	EMBANKMENT (N)	GRIND EXISTING CONCRETE PAVEMENT	OBLITERATE SURFACING	Shld RUMBLE STRIP (HMA GROUND-IN INDENTATIONS)	Shld RUMBLE STRIP (Conc Pvmt GROUND-IN INDENTATIONS)	SPALL REPAIR (POLYESTER CONCRETE)	ISOLATION JOINT SEAL (PREFORMED COMPRESSION)	LEAN CONCRETE BASE
			TON	CY	CY	CY	TON	TON	CY	CY	TON	CY	SQYD	SQYD	STA	STA	SQYD	LF	CY
SC-12 to SC-14	S3-P2	SB, Rte 5 LANE #2, STA 2964+00.00 to 3043+25.00	1,985	4,469		2,844	1.52		5,535	2,794								7,698	72
SC-12 to SC-14	S3-P2	SB, Rte 5 OUTSIDE Shld STA 2964+00.00 to 3037+81.00	3,314		0		2.38		1,696		194								
SC-15	S4-P1	NB, Rte 5 LANE #2, STA 3044+04.00 to 3067+89.00	615	1,385		881	0.47		1,714	866								2,385	
SC-16 to SC-18	S4-P2	NB, Rte 5 LANE #2, STA 2980+20.00 to 3044+04.00	1,588	3,574		2,275	1.22		4,427	2,235								6,157	72
SC-19 to SC-20	S5	NB, MEDIAN DETOUR, STA 2508+08.00 to 2960+00.00	46,774		41,818	63	18.83	159	42,059			26,055							
SC-19	S5	Rte 5 MEDIAN CROSSOVER #1, STA 2500+50.00 to 2510+34.84	367		427		0.26		527			867							
SC-21	S6-P1	SB, Rte 5 LANE #2, STA 2514+59.00 to 2535+98.00	552	1,242		790	0.42		1,538	776								2,139	
SC-21	S6-P1	SB, Rte 5 OUTSIDE Shld, STA 2514+59.00 to 2528+56.00	647		0		0.47		331		38								
SC-22, SC-23	S6-P2	SB, Rte 5 LANE #2, STA 2535+98.00 to 2964+00.00	11,037	24,849		15,813	8.47		30,773	15,536								42,802	
SC-22, SC-23	S6-P2	SB, Rte 5 OUTSIDE Shld, STA 2540+27.00 to 2964+00.00	19,630		0		14.12		10,044		1152								
SC-24	S7-P1	NB, Rte 5 LANE #2, STA 2514+00.00 to 2536+92.00	533	1,199		763	0.41		1,484	750								2,065	
SC-25, SC-26	S7-P2	NB, Rte 5 LANE #2, STA 2536+92.00 to 2980+20.00	11,431	25,735		16,377	8.77		31,871	16,089								44,328	
		SUBTOTAL Q-2	98,473	62,453	42,245	39,806	57.34	159	131,999	39,046	1384	26,922	0	0	0	0	0	107,574	144

3 3

3 REPLACED PER ADDENDUM No. 3 DATED OCTOBER 30, 2014

SUMMARY OF QUANTITIES
Q-2

STATE OF CALIFORNIA - DEPARTMENT OF TRANSPORTATION
Caltrans DESIGN

FUNCTIONAL SUPERVISOR: DAVID SANGHA
CALCULATED-DESIGNED BY: MAHMOOD SULTAN
CHECKED BY: CARMELITA BELLE
REVISED BY
DATE REVISED

LAST REVISION 06-19-14 DATE PLOTTED => 30-OCT-2014 TIME PLOTTED => 09:26

Dist	COUNTY	ROUTE	POST MILES TOTAL PROJECT	SHEET No.	TOTAL SHEETS
06	Ker	5	62.5/73.1	103	213

REGISTERED CIVIL ENGINEER 06-10-14 DATE

6-16-14
PLANS APPROVAL DATE

REGISTERED PROFESSIONAL ENGINEER MAHMOOD A SULTAN No. 76344 Exp. 12-31-14 CIVIL STATE OF CALIFORNIA

THE STATE OF CALIFORNIA OR ITS OFFICERS OR AGENTS SHALL NOT BE RESPONSIBLE FOR THE ACCURACY OR COMPLETENESS OF SCANNED COPIES OF THIS PLAN SHEET.

NOTES:

(N) NOT A SEPARATE PAY ITEM, FOR INFORMATION ONLY

ROADWAY QUANTITIES

SHEET No.	STAGE No.-PHASE No.	LOCATION/DESCRIPTION	HMA (TYPE A) TON	CRCP CY	CLASS 2 AGGREGATE BASE CY	CLASS 2 AGGREGATE SUBBASE CY	TACK COAT TON	SAFETY EDGE (N) TON	ROADWAY EXCAVATION CY	REMOVE CONCRETE PAVEMENT CY	SHOULDER BACKING TON	EMBANKMENT (N) CY	GRIND EXISTING CONCRETE PAVEMENT SQYD	OBLITERATE SURFACING SQYD	Shld RUMBLE STRIP (HMA GROUND-IN INDENTATIONS) STA	Shld RUMBLE STRIP (Conc Pvmt GROUND-IN INDENTATIONS) STA	SPALL REPAIR (POLYESTER CONCRETE) SQYD	ISOLATION JOINT SEAL (PREFORMED COMPRESSION) LF	LEAN CONCRETE BASE CY
SC-27 to SC-30	S8	NB, Rte 5 OBLITERATE 10 FEET MEDIAN DETOUR, STA 2508+08.00 to 2990+23.43												53,573					
SC-29, SC-30	S8	NB, Rte 5 OBLITERATE 10 FEET MEDIAN DETOUR, STA 2997+56.44 to 3078+79.00												9,025					
~~SC-29~~ SC-27	S8	REMOVE MEDIAN CROSSOVER #1, STA 2500+50.00 to 2510+34.84							1,615										
~~SC-30~~	~~S8~~ S4-P3	REMOVE MEDIAN CROSSOVER #2, STA 2954+42.89 to 2962+04.32							918										
3 ~~SC-31~~ SC-28	~~S9~~ S8	REMOVE MEDIAN CROSSOVER #3, STA 2972+70.25 to 2980+19.82							1,287										
~~SC-32~~	~~S10~~ S4-P3	REMOVE MEDIAN CROSSOVER #4, STA 3001+07.48 to 3008+90.18							1,130										
~~SC-33~~	~~S11~~ S4-P3	REMOVE MEDIAN CROSSOVER #5, STA 3076+70.81 to 3086+23.00							1,444										
		NB & SB, Rte 5 INSIDE Shld RUMBLE STRIPS, STA 2504+50.00 to STA 3076+91.69													1,145				
		NB & SB, Rte 5 OUTSIDE Shld RUMBLE STRIPS, STA 2504+50.00 to STA 3076+91.69														1,145			
		NB & SB, #1 LANE, STA 2504+50.00 to STA 3076+91.70											152,645				318		
		SUBTOTAL Q-4 (HMA DIKE)	285																
		SUBTOTAL Q-3	0	0	0	0	0.00	0	6,394	0	0	0	152,645	62,598	1145	1145	318		
		SUBTOTAL Q-2	98,473	62,453	42,245	39,806	57.34	159	131,999	39,046	1384	26,922	0	0	0	0	0	107,574	144
		SUBTOTAL Q-1	90,965	1,457	33,362	2,991	64.42	449	74,227	911	3176	8,370	0	0	0	0	0	2,509	
		TOTAL	189,723	63,910	75,607	42,797	121.76	608	212,620	39,957	4560	35,292	152,645	62,598	1145	1145	318	110,083	144

3 3

3 REPLACED PER ADDENDUM No. 3 DATED OCTOBER 30, 2014

SUMMARY OF QUANTITIES
Q-3

STATE OF CALIFORNIA - DEPARTMENT OF TRANSPORTATION
Caltrans DESIGN

FUNCTIONAL SUPERVISOR: DAVID SANGHA
CALCULATED-DESIGNED BY: MAHMOOD SULTAN
CHECKED BY: CARMELITA BELLE
REVISED BY
DATE REVISED

LAST REVISION 06-19-14 | DATE PLOTTED => 30-OCT-2014 | TIME PLOTTED => 09:26