DIST	COUNTY	ROUTE	POST MILES TOTAL PROJECT	SHEET No.	TOTAL SHEETS
07	LA	27,118	18.6/20.1 R0.0/R14.4	301	312

REGISTERED CIVIL ENGINEER 05/06/16 DATE

6-20-16
PLANS APPROVAL DATE

REGISTERED PROFESSIONAL ENGINEER Matthew Schott No. C77977 Exp. 06-30-17 CIVIL STATE OF CALIFORNIA

The State of California or its officers or agents shall not be responsible for the accuracy or completeness of electronic copies of this plan sheet.

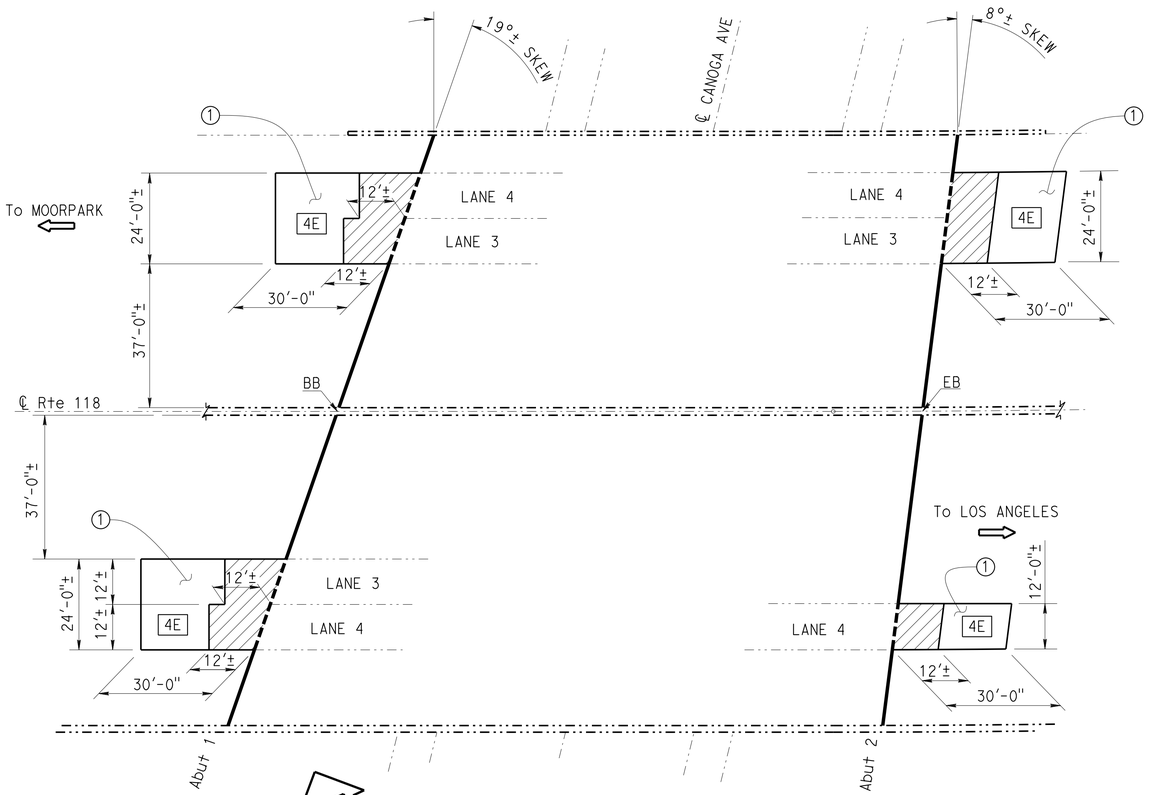

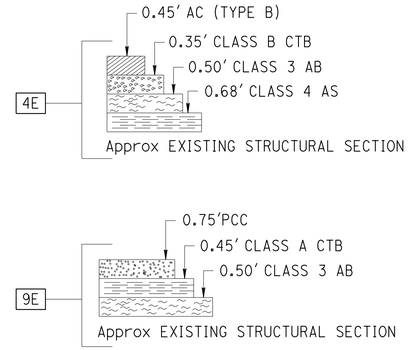

LEGEND:

- LIMITS OF REMOVAL OF EXISTING APPROACH SLAB. EXISTING PAVING NOTCH TO REMAIN.
- LIMITS OF EXISTING APPROACH SLAB. EXISTING PAVING NOTCH TO REMAIN.
- NEW CONSTRUCTION
- EXISTING STRUCTURE
- (1) STRUCTURE CONCRETE, APPROACH SLAB TYPE R(30D) WITH PAVING NOTCH EXTENSION
- LOCATION OF EXISTING JOINT SEAL REMOVAL, CLEAN EXPANSION JOINT AND PLACEMENT OF NEW JOINT SEAL
- LOCATION OF EXISTING JOINT SEAL REMOVAL, AND PLACEMENT OF NEW JOINT SEAL

CANOGA AVENUE UNDERCROSSING

Br. No. 53-2181, ROUTE 118, LA, PM R2.32
1"=20'

QUANTITIES

STRUCTURAL CONCRETE, APPROACH SLAB (TYPE R)	140	CY
PAVING NOTCH EXTENSION	67	CF
CLEAN EXPANSION JOINT	230	LF
JOINT SEAL (MR 1")	327	LF
THRIE BEAM CONNECTION (TYPE 9)	4	LF

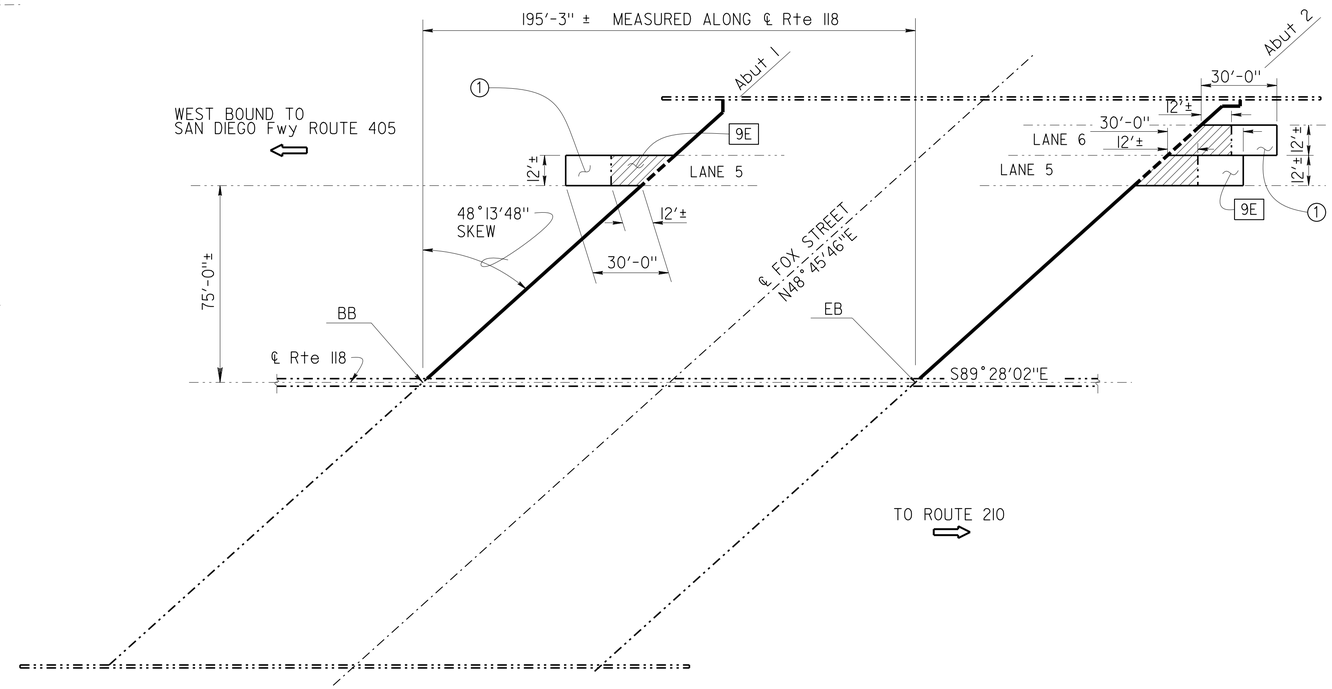

FOX STREET UNDERCROSSING

Br. No. 53-2215, ROUTE 118, LA, PM R10.83
1"=30'

QUANTITIES

STRUCTURAL CONCRETE, APPROACH SLAB (TYPE R)	73	CY
PAVING NOTCH EXTENSION	41	CF
CLEAN EXPANSION JOINT	279	LF
JOINT SEAL (MR 1")	332	LF
CONCRETE BARRIER TRANSITION (TYPE 25 MODIFIED)	15	LF

NOTE:
THE CONTRACTOR MUST VERIFY ALL CONTROLLING FIELD DIMENSIONS BEFORE ORDERING OR FABRICATING ANY MATERIAL.

DESIGN ENGINEER

	BY	CHECKED			
DESIGN	Jeff B Duffin	Matt Schott	LOAD & RESISTANCE FACTOR DESIGN	LIVE LOADING: HL93 W/"LOW-BOY"; PERMIT DESIGN VEHICLE	
DETAILS	Suraj Dutta	Jeff B Duffin	LAYOUT	Jeff B Duffin	Matt Schott
QUANTITIES	Jeff B Duffin	Matt Schott	SPECIFICATIONS	Xiahong Li	PLANS AND SPECS COMPARED Xiahong Li

ORIGINAL SCALE IN INCHES FOR REDUCED PLANS 0 1 2 3

STATE OF CALIFORNIA
DEPARTMENT OF TRANSPORTATION

DIVISION OF ENGINEERING SERVICES
STRUCTURE DESIGN
DESIGN BRANCH 18

BRIDGE NO. VARIOUS
POST MILE VARIOUS

ROUTE 118 BRIDGE APPROACH AND DEPARTURE SLAB REPLACEMENT
GENERAL PLAN NO. 2

UNIT: 3603
PROJECT NUMBER & PHASE: 0713000486-1
CONTRACT NO.: 07-30210

DISREGARD PRINTS BEARING EARLIER REVISION DATES

REVISION DATES 11/06/14 10/07/15 05/17/16

SHEET 2 OF 13

USERNAME => s125624 DATE PLOTTED => 27-JUL-2016 TIME PLOTTED => 10:14

STRUCTURES DESIGN GENERAL PLAN SHEET (ENGLISH) (REV.09-01-10)

FILE => 07-30210-a-gp2.dgn

DIST	COUNTY	ROUTE	POST MILES TOTAL PROJECT	SHEET No.	TOTAL SHEETS
07	LA	27,118	18.6/20.1, R0.0/R14.4	302	312

REGISTERED CIVIL ENGINEER — DATE 05/06/16

6-20-16
PLANS APPROVAL DATE

REGISTERED PROFESSIONAL ENGINEER — Matthew Schott No. C77977 Exp. 06-30-17 CIVIL — STATE OF CALIFORNIA

The State of California or its officers or agents shall not be responsible for the accuracy or completeness of electronic copies of this plan sheet.

LEGEND:

- LIMITS OF REMOVAL OF EXISTING APPROACH SLAB. EXISTING PAVING NOTCH TO REMAIN.
- LIMITS OF EXISTING APPROACH SLAB. EXISTING PAVING NOTCH TO REMAIN.
- NEW CONSTRUCTION
- EXISTING STRUCTURE
- (1) STRUCTURE CONCRETE, APPROACH SLAB TYPE R(30D) WITH PAVING NOTCH EXTENSION
- LOCATION OF EXISTING JOINT SEAL REMOVAL, CLEAN EXPANSION JOINT AND PLACEMENT OF NEW JOINT SEAL
- LOCATION OF EXISTING JOINT SEAL REMOVAL, AND PLACEMENT OF NEW JOINT SEAL

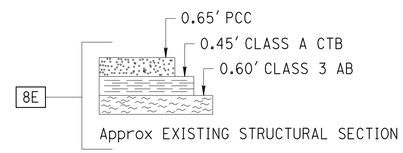

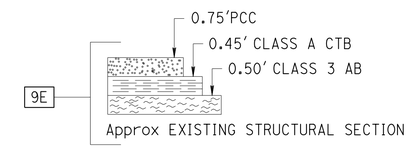

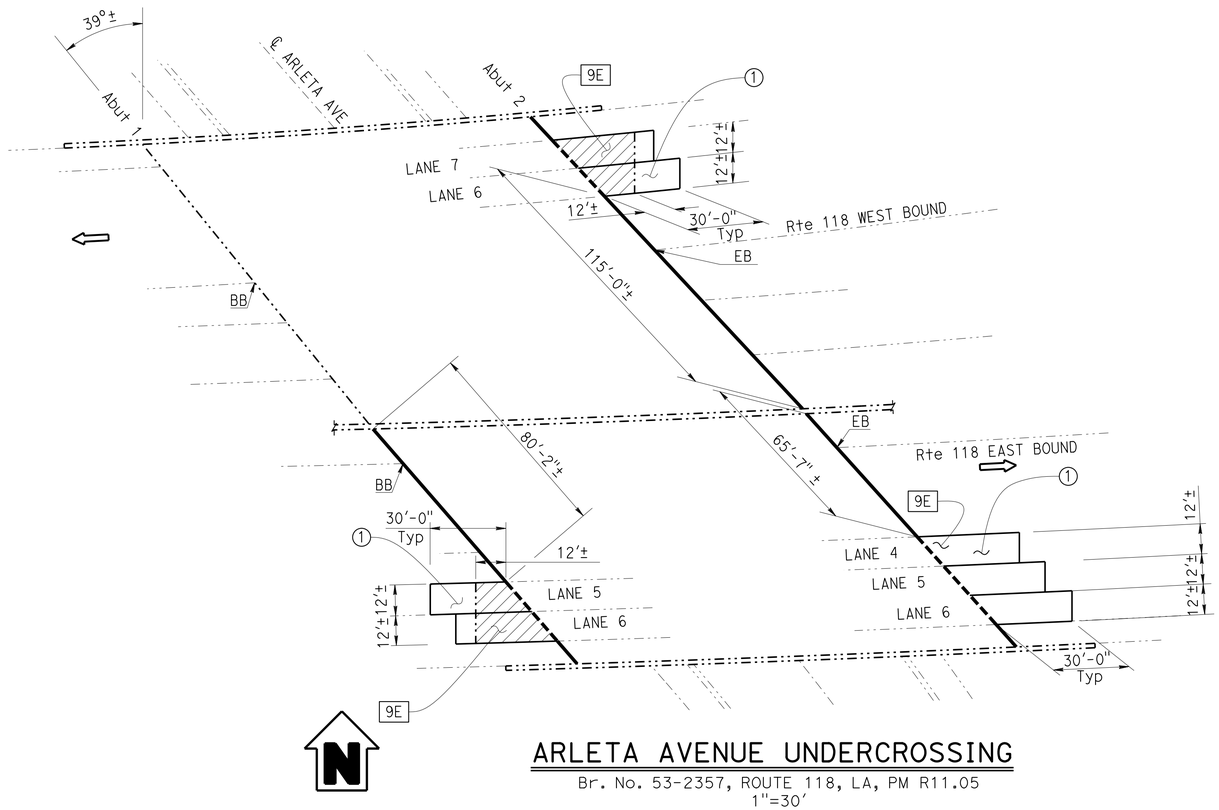

ARLETA AVENUE UNDERCROSSING

Br. No. 53-2357, ROUTE 118, LA, PM R11.05
1"=30'

QUANTITIES

STRUCTURAL CONCRETE, APPROACH SLAB (TYPE R)	164	CY
PAVING NOTCH EXTENSION	82	CF
CLEAN EXPANSION JOINT	298	LF
BONDED JOINT SEAL (MR 2")	125	LF
BONDED JOINT SEAL (MR 3")	285	LF
THRIE BEAM CONNECTION (TYPE 25)	4	LF
CONCRETE BARRIER TRANSITION (TYPE 25 MODIFIED)	15	LF

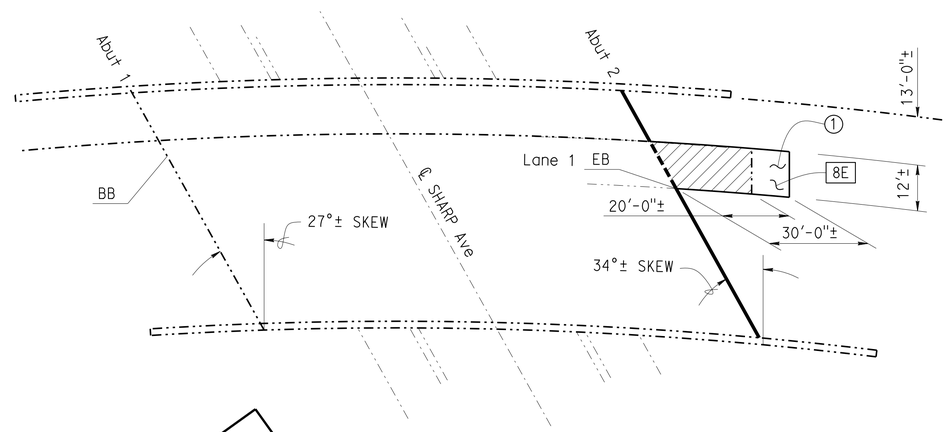

E118-S5 CONNECTOR OC

Br. No. 53-2343G, ROUTE 118, LA, PM R11.32
1"=20'

QUANTITIES

STRUCTURAL CONCRETE, APPROACH SLAB (TYPE R)	21	CY
PAVING NOTCH EXTENSION	11	CF
CLEAN EXPANSION JOINT	61	LF
BONDED JOINT SEAL (MR 1 1/2")	76	LF
CONCRETE BARRIER TRANSITION (TYPE 25 MODIFIED)	15	LF

NOTE:
THE CONTRACTOR MUST VERIFY ALL CONTROLLING FIELD DIMENSIONS BEFORE ORDERING OR FABRICATING ANY MATERIAL.

DESIGN ENGINEER

	BY	CHECKED
DESIGN	Jeff B Duffin	Matt Schott
DETAILS	Suraj Dutta	Jeff B Duffin
QUANTITIES	Jeff B Duffin	Matt Schott

LOAD & RESISTANCE FACTOR DESIGN — LIVE LOADING: HL93 W/"LOW-BOY"; PERMIT DESIGN VEHICLE

	BY	CHECKED
LAYOUT	Jeff B Duffin	Matt Schott
SPECIFICATIONS	Xiahong Li	PLANS AND SPECS COMPARED Xiahong Li

ORIGINAL SCALE IN INCHES FOR REDUCED PLANS 0 1 2 3

STATE OF CALIFORNIA
DEPARTMENT OF TRANSPORTATION

DIVISION OF ENGINEERING SERVICES
STRUCTURE DESIGN
DESIGN BRANCH 18

BRIDGE NO. VARIOUS
POST MILE VARIOUS

ROUTE 118 BRIDGE APPROACH AND DEPARTURE SLAB REPLACEMENT
GENERAL PLAN NO. 3

UNIT: 3603
PROJECT NUMBER & PHASE: 0713000486-1
CONTRACT NO.: 07-30210

DISREGARD PRINTS BEARING EARLIER REVISION DATES → 11/06/14 10/07/15 05/17/16

SHEET 3 OF 13

USERNAME => s125624 DATE PLOTTED => 27-JUL-2016

STRUCTURES DESIGN GENERAL PLAN SHEET (ENGLISH) (REV.09-01-10)

FILE => 07-30210-a-gp3.dgn

DIST	COUNTY	ROUTE	POST MILES TOTAL PROJECT	SHEET No.	TOTAL SHEETS
07	LA	27,118	18.6/20.1, R0.0/R14.4	303	312

REGISTERED CIVIL ENGINEER — DATE 05/06/16

6-20-16
PLANS APPROVAL DATE

REGISTERED PROFESSIONAL ENGINEER — Matthew Schott — No. C77977 — Exp. 06-30-17 — CIVIL — STATE OF CALIFORNIA

The State of California or its officers or agents shall not be responsible for the accuracy or completeness of electronic copies of this plan sheet.

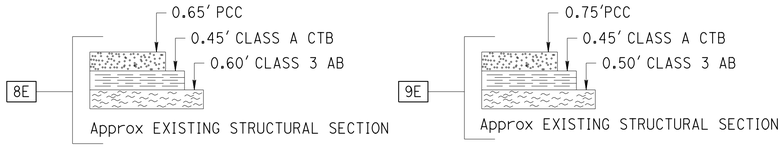

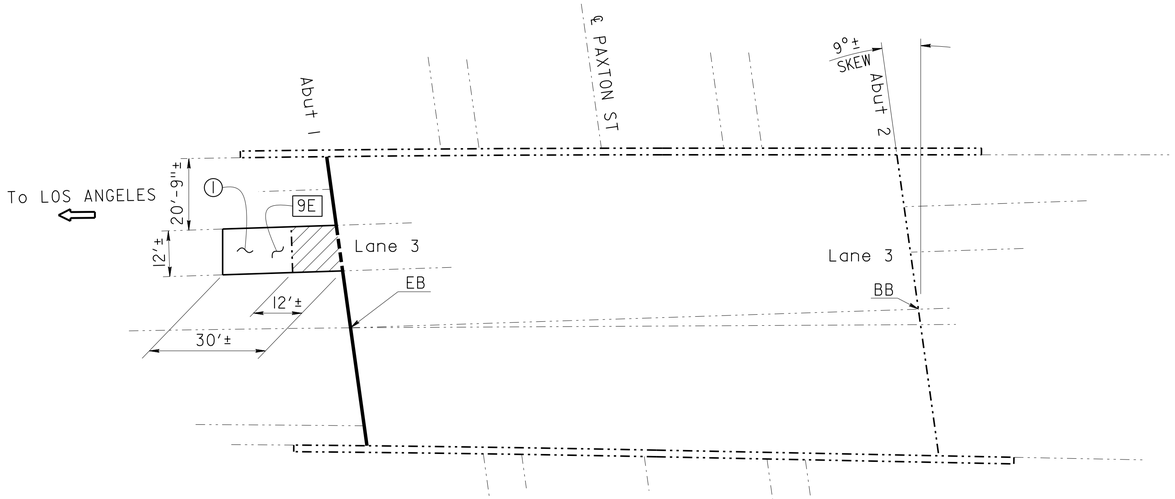

PAXTON STREET UNDERCROSSING

Br. No. 53-1127H, ROUTE 118, LA, PM R11.42
1"=20'

QUANTITIES

STRUCTURAL CONCRETE, APPROACH SLAB (TYPE R)	21	CY
PAVING NOTCH EXTENSION	10	CF
CLEAN EXPANSION JOINT	66	LF
JOINT SEAL (MR 1 1/2")	82	LF

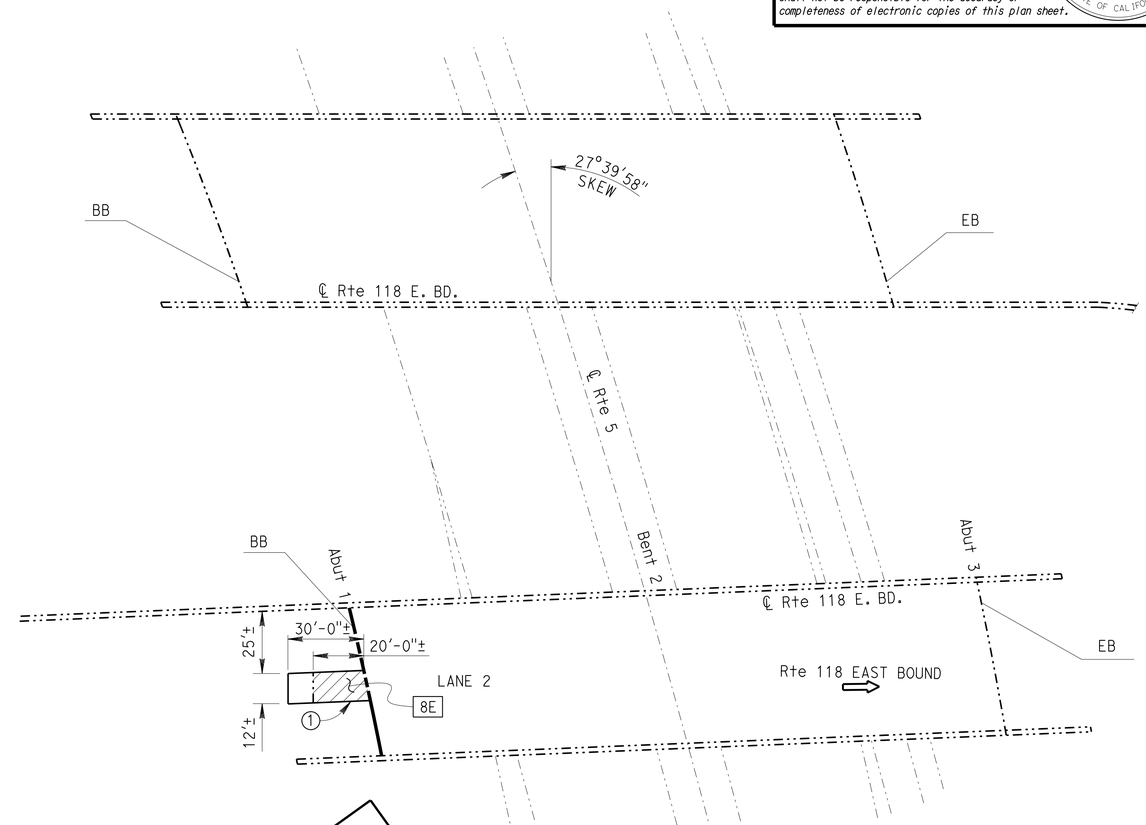

ROUTE 118/5 SEPARATION

Br. No. 53-2324R/L, ROUTE 118, LA, PM R11.43
1"=30'

QUANTITIES

STRUCTURAL CONCRETE, APPROACH SLAB (TYPE R)	19	CY
PAVING NOTCH EXTENSION	10	CF
CLEAN EXPANSION JOINT	48	LF
BONDED JOINT SEAL (MR 1")	61	LF
CONCRETE BARRIER TRANSITION (TYPE 25 MODIFIED)	44	LF

LEGEND:

- LIMITS OF REMOVAL OF EXISTING APPROACH SLAB. EXISTING PAVING NOTCH TO REMAIN.
- LIMITS OF EXISTING APPROACH SLAB. EXISTING PAVING NOTCH TO REMAIN.
- NEW CONSTRUCTION
- EXISTING STRUCTURE
- (1) STRUCTURE CONCRETE, APPROACH SLAB TYPE R(30D) WITH PAVING NOTCH EXTENSION
- LOCATION OF EXISTING JOINT SEAL REMOVAL, CLEAN EXPANSION JOINT AND PLACEMENT OF NEW JOINT SEAL
- LOCATION OF EXISTING JOINT SEAL REMOVAL, AND PLACEMENT OF NEW JOINT SEAL

NOTE:
THE CONTRACTOR MUST VERIFY ALL CONTROLLING FIELD DIMENSIONS BEFORE ORDERING OR FABRICATING ANY MATERIAL.

DESIGN	BY Jeff B Duffin	CHECKED Matt Schott	LOAD & RESISTANCE FACTOR DESIGN	LIVE LOADING: HL93 W/"LOW-BOY"; PERMIT DESIGN VEHICLE
DETAILS	BY Suraj Dutta	CHECKED Jeff B Duffin	LAYOUT: BY Jeff B Duffin	CHECKED Matt Schott
QUANTITIES	BY Jeff B Duffin	CHECKED Matt Schott	SPECIFICATIONS: BY Xiahong Li	PLANS AND SPECS COMPARED Xiahong Li

DESIGN ENGINEER

STATE OF CALIFORNIA
DEPARTMENT OF TRANSPORTATION

DIVISION OF ENGINEERING SERVICES
STRUCTURE DESIGN
DESIGN BRANCH 18

BRIDGE NO. VARIOUS
POST MILE VARIOUS

ROUTE 118 BRIDGE APPROACH AND DEPARTURE SLAB REPLACEMENT
GENERAL PLAN NO. 4

ORIGINAL SCALE IN INCHES FOR REDUCED PLANS 0 1 2 3

UNIT: 3603
PROJECT NUMBER & PHASE: 0713000486-1
CONTRACT NO.: 07-30210

DISREGARD PRINTS BEARING EARLIER REVISION DATES
REVISION DATES 11/18/14 10/07/15 05/17/16

SHEET 4 OF 13

DIST	COUNTY	ROUTE	POST MILES TOTAL PROJECT	SHEET No.	TOTAL SHEETS
07	LA	27,118	18.6/20.1, R0.0/R14.4	304	312

REGISTERED CIVIL ENGINEER 05/06/16 DATE

6-20-16
PLANS APPROVAL DATE

REGISTERED PROFESSIONAL ENGINEER Matthew Schott No. C77977 Exp. 06-30-17 CIVIL STATE OF CALIFORNIA

The State of California or its officers or agents shall not be responsible for the accuracy or completeness of electronic copies of this plan sheet.

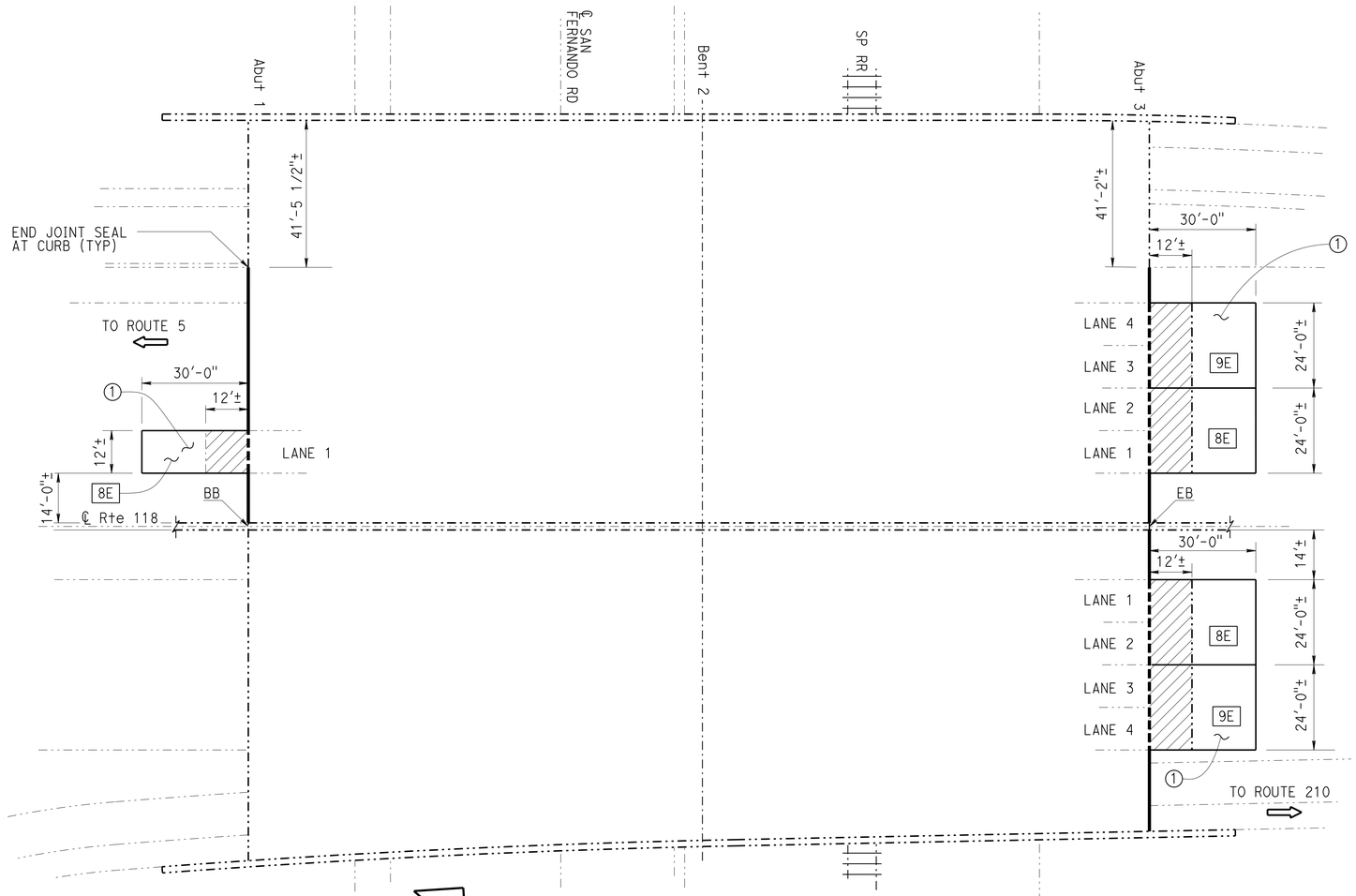

SAN FERNANDO ROAD OVERHEAD

Br. No. 53-2095, ROUTE 118, LA, PM R12.40
1"=20'

QUANTITIES

STRUCTURAL CONCRETE, APPROACH SLAB (TYPE R)	180	CY
PAVING NOTCH EXTENSION	81	CF
CLEAN EXPANSION JOINT	121	LF
BONDED JOINT SEAL (MR 1")	232	LF
CONCRETE BARRIER TRANSITION (TYPE 25 MODIFIED)	15	LF

LEGEND:

- LIMITS OF REMOVAL OF EXISTING APPROACH SLAB. EXISTING PAVING NOTCH TO REMAIN.
- LIMITS OF EXISTING APPROACH SLAB. EXISTING PAVING NOTCH TO REMAIN.
- NEW CONSTRUCTION
- EXISTING STRUCTURE
- (1) STRUCTURE CONCRETE, APPROACH SLAB TYPE R(30D) WITH PAVING NOTCH EXTENSION
- LOCATION OF EXISTING JOINT SEAL REMOVAL, CLEAN EXPANSION JOINT AND PLACEMENT OF NEW JOINT SEAL
- LOCATION OF EXISTING JOINT SEAL REMOVAL, AND PLACEMENT OF NEW JOINT SEAL

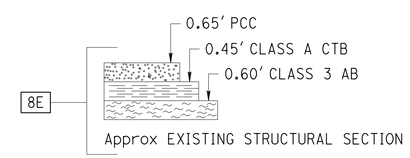

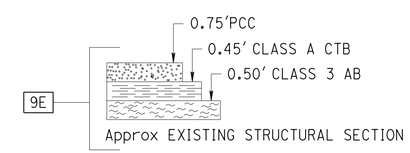

NOTE:
THE CONTRACTOR MUST VERIFY ALL CONTROLLING FIELD DIMENSIONS BEFORE ORDERING OR FABRICATING ANY MATERIAL.

DESIGN ENGINEER

	BY	CHECKED			
DESIGN	Jeff B Duffin	Matt Schott	LOAD & RESISTANCE FACTOR DESIGN	LIVE LOADING: HL93 W/"LOW-BOY"; PERMIT DESIGN VEHICLE	
DETAILS	Suraj Dutta	Jeff B Duffin	LAYOUT	Jeff B Duffin	Matt Schott
QUANTITIES	Jeff B Duffin	Matt Schott	SPECIFICATIONS	Xiahong Li	PLANS AND SPECS COMPARED Xiahong Li

ORIGINAL SCALE IN INCHES FOR REDUCED PLANS 0 1 2 3

STATE OF CALIFORNIA
DEPARTMENT OF TRANSPORTATION

DIVISION OF ENGINEERING SERVICES
STRUCTURE DESIGN
DESIGN BRANCH 18

BRIDGE NO. VARIOUS
POST MILE VARIOUS

ROUTE 118 BRIDGE APPROACH AND DEPARTURE SLAB REPLACEMENT
GENERAL PLAN NO. 5

UNIT: 3603
PROJECT NUMBER & PHASE: 0713000486-1
CONTRACT NO.: 07-30210

DISREGARD PRINTS BEARING EARLIER REVISION DATES
REVISION DATES 11/18/14 10/09/15 05/17/16

SHEET 5 OF 13

USERNAME => s125624 DATE PLOTTED => 27-JUL-2016

STRUCTURES DESIGN GENERAL PLAN SHEET (ENGLISH) (REV.09-01-10)

FILE => 07-30210-a-gp5.dgn

DIST	COUNTY	ROUTE	POST MILES TOTAL PROJECT	SHEET No.	TOTAL SHEETS
07	LA	27,118	18.6/20.1, R0.0/R14.4	305	312

Matthew Schott 05/06/16
REGISTERED CIVIL ENGINEER DATE

6-20-16
PLANS APPROVAL DATE

REGISTERED PROFESSIONAL ENGINEER Matthew Schott No. C77977 Exp. 06-30-17 CIVIL STATE OF CALIFORNIA

The State of California or its officers or agents shall not be responsible for the accuracy or completeness of scanned copies of this plan sheet.

JOINT SEAL TABLE

BRIDGE NAME	BRIDGE NUMBER	POST MILE	LOCATION		MINIMUM "MR" (in)	JOINT SEAL LENGTH, (ft) A = APPROACH D = DEPARTURE		APPROX LENGTH TO CLEAN EXP JOINT, (ft) A = APPROACH D = DEPARTURE		APPROX DEPTH CLEAN Exp Jt (in)	EXISTING WATERSTOP
IVERSON ROAD UC	53-1831	±R1.10	Abut 1	BB	1	A= 72.0′	D= 74.0′	A= 20.0′	D= 22.0′	±12	No
			Abut 4	EB	1	A= 74.0′	D= 72.0′	A= 49.0′	D= 20.0′	±12	No
ROUTE 118/27 SEPERATION	53-1832	±R1.78	Abut 1	BB	1	A= 72.0′	D= 72.0′	A= 33.0′	D= 48.0′	±12	No
			Abut 4	EB	1	A= 72.0′		A= 33.0′		±12	No
CANOGA AVENUE UC	53-2181	±R2.32	Abut 1	BB	1	A= 90.0′	D= 74.0′	A= 61.0′	D= 51.0′	±12	No
			Abut 2	EB	1	A= 79.0′	D= 84.0′	A= 48.0′	D= 70.0′	±12	No
FOX STREET UC	53-2215	±R10.8	Abut 1	BB	1		D= 166.0′		D= 144.0′	±12	No
			Abut 2	EB	1	A= 166.0′		A= 135.0′		±12	No
ARLETA AVENUE UC	53-2357	±R11.05	Abut 1	BB	2 ✳	A= 125.0′		A= 92.0′		±12	No
			Abut 2	EB	3 ✳	A= 159.0′	D= 126.0′	A= 128.0′	D= 78.0′	±12	No
E118-S5 CONNECTOR OC	53-2343G	±R11.32	Abut 1	BB							
			Abut 2	EB	1 ½ ✳		D= 76.0′		D= 61.0′	±12	No
PAXTON STREET UC	53-1127H	±R11.42	Abut 1	BB							
			Abut 2	EB	1 ½		D= 82.0′		D= 66.0′	±12	No
ROUTE 118/5 SEPERATION	53-2324R	±R11.42	Abut 1	BB	1 ✳	A= 61.0′		A= 48.0′		±12	No
			Abut 3	EB							
SAN FERNANDO ROAD OH	53-2095	±R12.40	Abut 1	BB	1		D= 73.0′		D= 60.0′	±12	No
			Abut 3	EB	1	A= 73.0′	D= 86.0′	A= 24.0′	D= 37.0′	±12	No

✳ BONDED JOINT SEAL

NOTES:

The following notes apply to JOINT SEAL TYPE A:

Install Joint Seal (MR =½") or Silicone Joint Seal 3" up into curb or barrier rail on the low side of the deck where deck joint aligns with curb or barrier rail joint.

For details not shown see B6-21 sheet.

The following notes apply to JOINT SEAL TYPE B:

1) Seal must satisfy both minimum movement Rating (MR) and minimum W1 requirements.

2) MInimum W1 is the calculated maximum width of the joint based on field measurements. After the joints have been cleaned, minimum W1 is to be recalculated by the Engineer.

3) W1 shall be the smaller of the values determined as follows:

A) 0.85 times the manfacturer's designed minimum uncompressed width of the seal.

B) The width of the seal on the third successive test cycle of the pressure deflection test, when compressed to an average pressure of 3.0 PSI.

4) Bend Type B joint seal 6 inches up into curb or rail on the low side of the deck where deck joint matches curb or rail joint.

For details not shown see B6-21 sheet

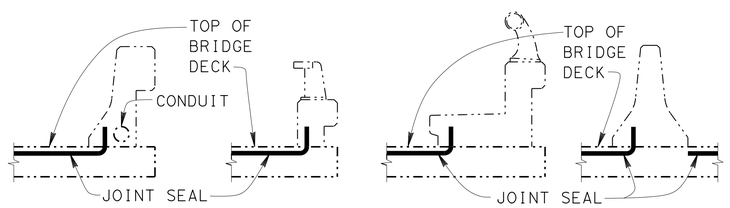

BARRIER RAIL

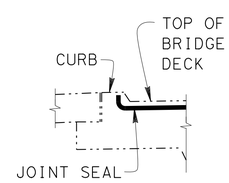

CURB

JOINT SEAL AT LOW SIDE OF DECK

Notes: Details shown for illustration purposes only.

For use only where deck joint matches the sidewalk, curb or barrier rail joint.

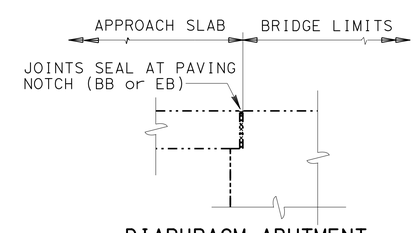

DIAPHRAGM ABUTMENT

JOINT SEAL LOCATION

NOTE:
THE CONTRACTOR MUST VERIFY ALL CONTROLLING FIELD DIMENSIONS BEFORE ORDERING OR FABRICATING ANY MATERIAL.

	BY	CHECKED
DESIGN	Jeff B Duffin	Matt Schott
DETAILS	Suraj Dutta	Jeff B Duffin
QUANTITIES	Jeff B Duffin	Matt Schott

STATE OF CALIFORNIA
DEPARTMENT OF TRANSPORTATION

DIVISION OF ENGINEERING SERVICES
STRUCTURE DESIGN
DESIGN BRANCH 18

BRIDGE NO.: VARIOUS
POST MILE: VARIOUS

ROUTE 118 BRIDGE APPROACH AND DEPARTURE SLAB REPLACEMENT

JOINT SEAL DETAILS

STRUCTURES DESIGN DETAIL SHEET (ENGLISH) (REV. 09-01-10)

ORIGINAL SCALE IN INCHES FOR REDUCED PLANS 0 1 2 3

UNIT: 3603
PROJECT NUMBER & PHASE: 0713000486-1
CONTRACT NO.: 07-30210

DISREGARD PRINTS BEARING EARLIER REVISION DATES → 11/06/14 10/07/15 05/05/16

SHEET 6 OF 13

FILE => 07-30210-j-js_dt.dgn

USERNAME => s125624 DATE PLOTTED => 27-JUL-2016 TIME PLOTTED => 10:14

DIST	COUNTY	ROUTE	POST MILES TOTAL PROJECT	SHEET No.	TOTAL SHEETS
07	LA	27,118	18.6/20.1, R0.0/R14.4	306	312

REGISTERED CIVIL ENGINEER — DATE 05/06/16

6-20-16
PLANS APPROVAL DATE

The State of California or its officers or agents shall not be responsible for the accuracy or completeness of electronic copies of this plan sheet.

REGISTERED PROFESSIONAL ENGINEER — Matthew Schott No. C77977 Exp. 06-30-17 CIVIL — STATE OF CALIFORNIA

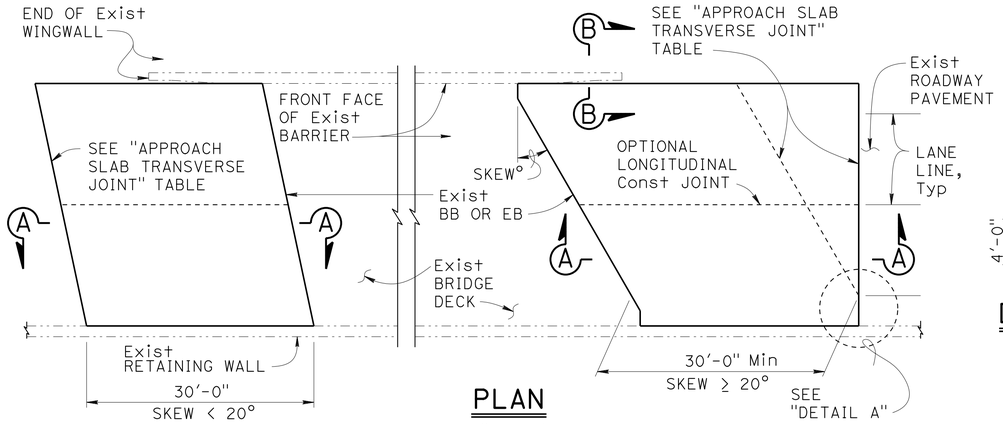

PLAN
1" = 10'

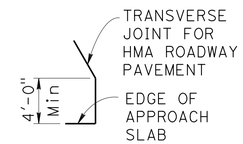

DETAIL A
No Scale

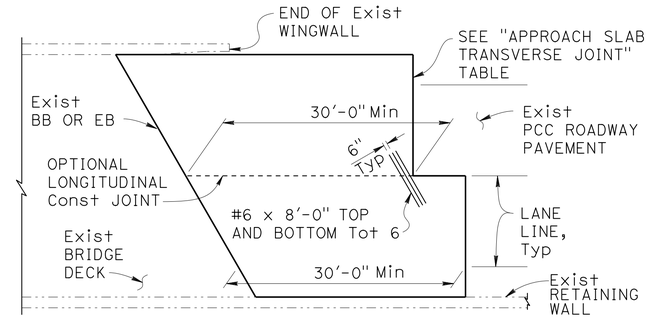

END STAGGER DETAIL
1" = 10'

APPROACH SLAB TRANSVERSE JOINT		
APPROACH SKEW	WITH HMA ROADWAY PAVEMENT	WITH PCC ROADWAY PAVEMENT
< 20°	PARALLEL TO BB OR EB	PARALLEL TO BB OR EB
20° - 45°	PARALLEL TO BB OR EB USE "DETAIL A"	STAGGER AT LANE LINES 24' TO 36' APART, SEE "END STAGGER DETAIL"
> 45°	PARALLEL TO BB OR EB USE "DETAIL A"	STAGGER AT EACH LANE LINE, SEE "END STAGGER DETAIL"

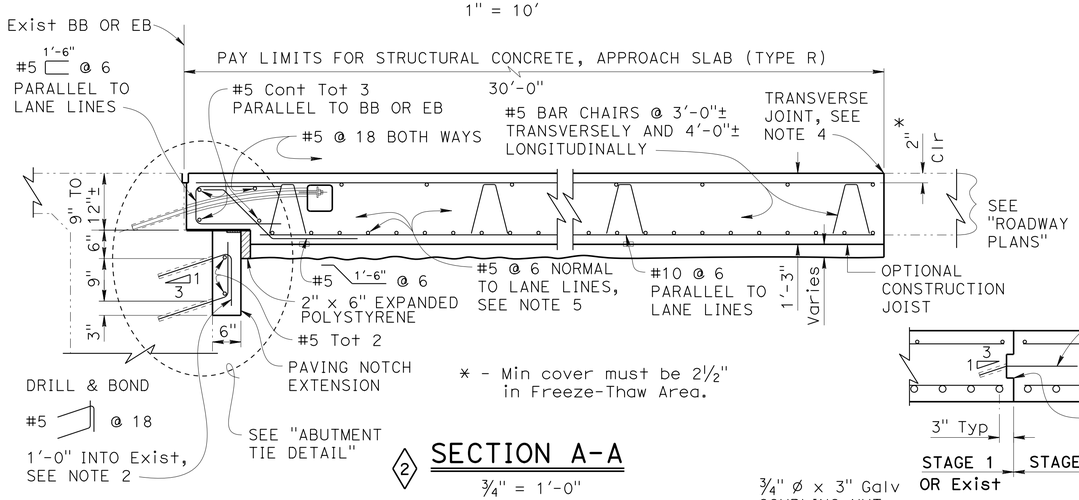

* - Min cover must be 2½" in Freeze-Thaw Area.

SECTION A-A
3/4" = 1'-0"

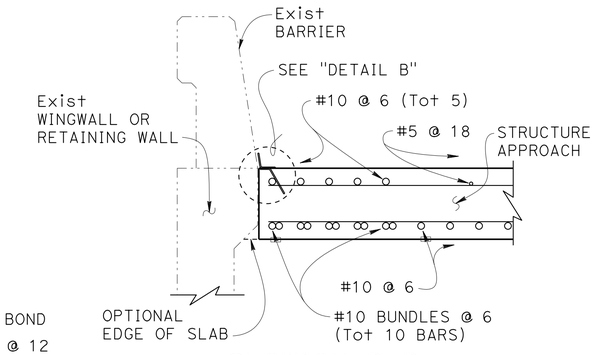

SECTION B-B
3/4" = 1'-0"

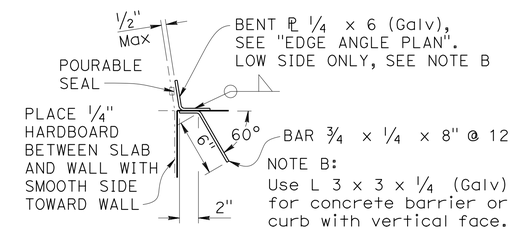

DETAIL B
1½" = 1'-0"

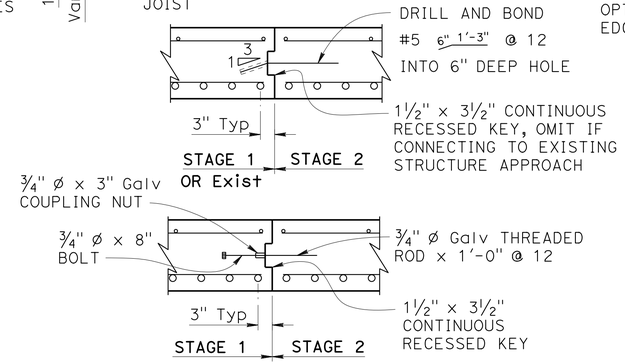

DESIGN NOTES

DESIGN: AASHTO LRFD Bridge Design Specifications, 2012 Edition with Caltrans Amendments, preface dated January 2014

LIMIT STATES: Service I, Strength I & II, Extreme II and Fatigue I (γ_{FAT} = 1.0)

DEAD LOAD: Includes 35 psf for future wearing surface

LIVE LOAD: HL93 and permit design load
Equivalent strip width method: W_1 = 12 ft
Slab span: L_1 = 24.5 ft

REINFORCED CONCRETE:
f_y = 60 ksi
f'_c = 3.6 ksi
n = 8

NOTES:

1. For details not shown, see other plan sheets. Adjust reinforcement to clear sawcut for sealed joint.
2. Space reinforcement to avoid existing prestress anchorages and other abutment reinforcement.
3. End the plate or edge angle at beginning of barrier transition, end of wingwall, or end of structure approach as applicable.
4. Transverse Joint must be a minimum of 5'-0" from an existing or constructed weakened plane joint in approach PCC roadway pavement. Refer to Standard Plans P10 and P14.
5. At the Contractor's option, approach slab transverse reinforcement may be placed parallel to BB or EB. Spacing of transverse reinforcement is measured along ℄ roadway.
6. Thickness of unreinforced concrete varies according to thickness of existing roadway section removal shown on "GENERAL PLAN" sheets.

(3) 6. Thickness of unreinforced concrete varies according to thickness of existing roadway section removal shown on "GENERAL PLAN" sheets.

-·-·- Indicates Existing Structure

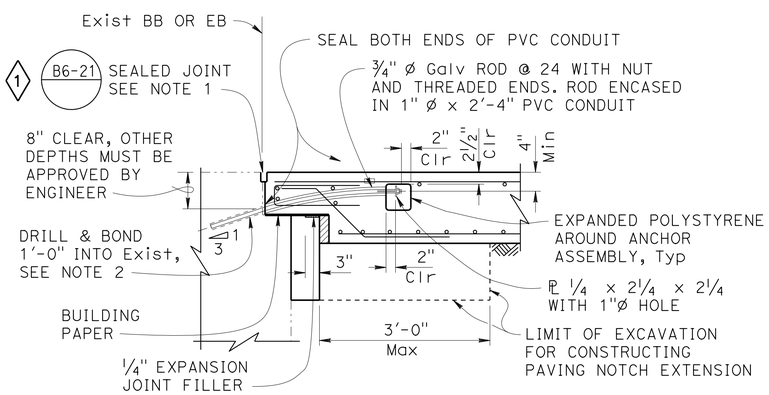

NOTE: For details not shown, see "SECTION A-A".

NOTE:
The contractor must verify all controlling field dimensions before ordering or fabricating any material.

ABUTMENT TIE DETAIL
3/4" = 1'-0"

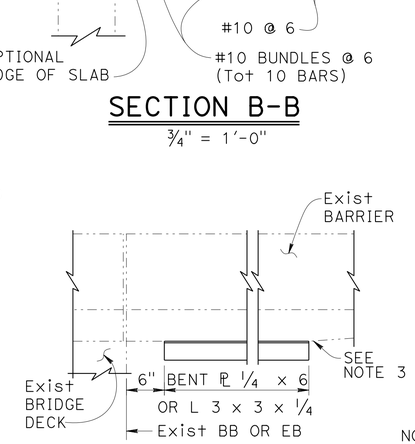

EDGE ANGLE PLAN
1" = 1'-0"

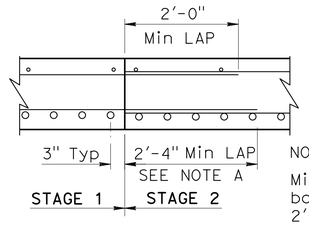

NOTE A:
Min lap splice for bottom Reinf must be 2'-9" in Freeze-Thaw Area.

LONGITUDINAL CONSTRUCTION JOINT ALTERNATIVES
3/4" = 1'-0"

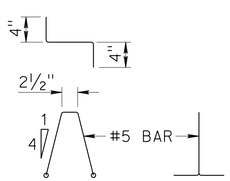

BAR CHAIR DETAIL
1" = 1'-0"

SPECIAL DETAILS

STANDARD DRAWING		(1) CHANGED NOTE	(2) CHANGED DETAIL	(3) ADDED NOTE	STATE OF CALIFORNIA DEPARTMENT OF TRANSPORTATION	DIVISION OF ENGINEERING SERVICES	BRIDGE NO. VARIOUS / POST MILE VARIOUS	ROUTE 118 BRIDGE APPROACH AND DEPARTURE SLAB REPLACEMENT
FILE NO. xs3-150	APPROVAL DATE January 2015							STRUCTURE APPROACH TYPE R (30D)

DS OSD 2147A (ENGLISH STANDARD DRAWING "XS" BORDER REV. (10-01-14)

ORIGINAL SCALE IN INCHES FOR REDUCED PLANS 0 1 2 3

UNIT: 3603
PROJECT NUMBER & PHASE: 0713000486-1
CONTRACT NO.: 07-30210

DISREGARD PRINTS BEARING EARLIER REVISION DATES — REVISION DATES: 7-10-14, 10/07/15, 05/16/16

SHEET 7 OF 13

FILE => 07-30210-s-satR.dgn

USERNAME => s125624 DATE PLOTTED => 27-JUL-2016 TIME PLOTTED => 10:14

DIST	COUNTY	ROUTE	POST MILES TOTAL PROJECT	SHEET No.	TOTAL SHEETS
07	LA	27,118	18.6/20.1, R0.0/R14.4	307	312

REGISTERED CIVIL ENGINEER 05/06/16 DATE

6-20-16
PLANS APPROVAL DATE

REGISTERED PROFESSIONAL ENGINEER Matthew Schott No. C77977 Exp. 06-30-17 CIVIL STATE OF CALIFORNIA

The State of California or its officers or agents shall not be responsible for the accuracy or completeness of scanned copies of this plan sheet.

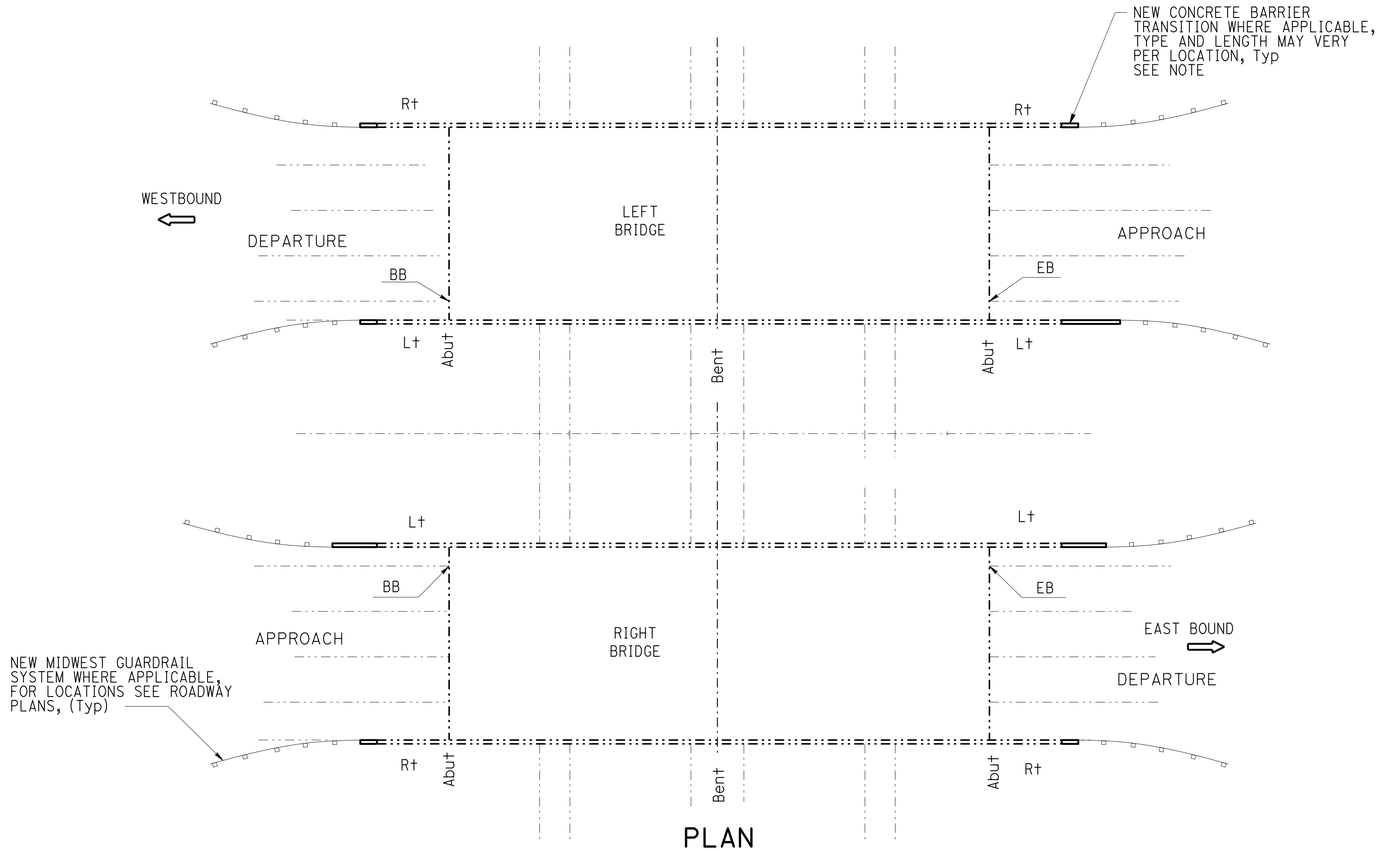

PLAN

NO SCALE

NOTE:
For anchor block designation, see "CONCRETE BARRIER TRANSITION TABLES" sheet.

NOTE:
THE CONTRACTOR MUST VERIFY ALL CONTROLLING FIELD DIMENSIONS BEFORE ORDERING OR FABRICATING ANY MATERIAL.

	BY	CHECKED
DESIGN	Jeff B Duffin	Matt Schott
DETAILS	Suraj Dutta	Jeff B Duffin
QUANTITIES	Jeff B Duffin	Matt Schott

STATE OF CALIFORNIA
DEPARTMENT OF TRANSPORTATION

DIVISION OF ENGINEERING SERVICES
STRUCTURE DESIGN
DESIGN BRANCH 18

BRIDGE NO.: VARIOUS
POST MILE: VARIOUS

ROUTE 118 BRIDGE APPROACH AND DEPARTURE SLAB REPLACEMENT
TYPICAL CONCRETE BARRIER TRANSITION PLAN

STRUCTURES DESIGN DETAIL SHEET (ENGLISH) (REV. 09-01-10)

ORIGINAL SCALE IN INCHES FOR REDUCED PLANS 0 1 2 3

UNIT: 3603
PROJECT NUMBER & PHASE: 0713000486-1
CONTRACT NO.: 07-30210

DISREGARD PRINTS BEARING EARLIER REVISION DATES
REVISION DATES: 11/06/14 10/07/15 05/05/16

SHEET 8 OF 13

FILE => 07-30210-t-tctp.dgn

USERNAME => s125624 DATE PLOTTED => 27-JUL-2016 TIME PLOTTED => 10:14

DIST	COUNTY	ROUTE	POST MILES TOTAL PROJECT	SHEET No.	TOTAL SHEETS
07	LA	27,118	18.6/20.1, R0.0/R14.4	308	312

Matthew Schott 05/06/16
REGISTERED CIVIL ENGINEER DATE

6-20-16
PLANS APPROVAL DATE

REGISTERED PROFESSIONAL ENGINEER Matthew Schott No. C77977 Exp. 06-30-17 CIVIL STATE OF CALIFORNIA

The State of California or its officers or agents shall not be responsible for the accuracy or completeness of scanned copies of this plan sheet.

CONCRETE BARRIER TRANSITION LOCATIONS

	BRIDGE NAME	BRIDGE NUMBER	POST MILE	MGS/BARRIER CONNECTION TYPE							
				EASTBOUND DIRECTION				WESTBOUND DIRECTION			
				DEPARTURE		APPROACH		DEPARTURE		APPROACH	
				Lt	Rt	Lt	Rt	Lt	Rt	Lt	Rt
1	IVERSON RD UC	53-1831	R1.09		25		25		25		25
2	Rte 118/27 Sep	53-1832	R1.78								1
3	CANOGA AVE UC	53-2181	R2.32								9
4	DE SOTO AVE	53-2182	R2.48				9				9
5	DE SOTO AVE OR	53-2182S	R2.48			9					
6	WOODLEY AVE UC	53-2207	R8.89				25m				
7	HASKELL AVE UC	53-2209	R9.57								25m
8	SEPULVEDA BLVD UC	53-2213	R10.06								25m
9	WB 118/SB 405 CONN	53-2213F	R10.06								25m
10	CHATSWORTH DR UC	53-2214	R10.51				25m				25m
11	FOX STREET UC	53-2215	R10.86						25m		
12	ARLETA AVE UC	53-2357	R11.06		25						25m
13	SHARP AVE UC	53-2342R	R11.31			25m					
14	EB 118/SB 405	53-2210G	R9.60			25m					
15	WB 118/SB 405 CONN OC	53-2212F	R10.00						25m	25m	25m
16	SHARP AVE UC	53-2342L	R11.31							25m	25m
17	Rte 118/5 SEP	53-2324R/L	R11.43			25m				25m	25m
18	EB 118/SB 5 CONN OC	53-2328G	R11.40			25m	25m				
19		53-2343G	R11.40				25m				
20	LAUREL CANYON BLVD OC	53-2325K	R11.42							25m	25m
21	WB 118/SB 5	53-2327F	R11.52							25	25
22	TELFAIR AVE UC	53-2337	R12.13				25				
23	LAUREL CYN BLVD UC	53-2344R	R11.57			25m	25m				
24	LAUREL CYN BLVD UC	53-2344L	R11.57								25m
25	SAN FERNANDO RD OH	53-2095	R12.39								25m
26	PAXTON ST UC	53-2354S	R12.38			25m					
27	BRADLEY AVE UC	53-2352	R12.68				25m				25m
28	EB 118/WB 210 CONN	53-2120G	R13.68			25m					
29	DRONFIELD AVE UC	53-2120	R13.68				25m				
30	PAXTON FOOTHILL UC	53-2103G	R13.89			25m	25m				

LEGEND:

25m - CONCRETE BARRIER (TRANSITION) TYPE 25 (MOD)
25 - THRIE BEAM CONNECTION - TYPE 25
1 - THRIE BEAM CONNECTION - TYPE 1
9 - THRIE BEAM CONNECTION - TYPE 9

NOTE:
THE CONTRACTOR MUST VERIFY ALL CONTROLLING FIELD DIMENSIONS BEFORE ORDERING OR FABRICATING ANY MATERIAL.

QUANTITIES

04 - DE SOTO AVENUE (BRIDGE NO. 53-2182)
THRIE BEAM CONNECTION (TYPE 9) 8 LF
05 - DE SOTO AVENUE OR (BRIDGE NO. 53-2182S)
THRIE BEAM CONNECTION (TYPE 9) 4 LF
06 - WOODLEY AVENUE UC (BRIDGE NO. 53-2207)
CONCRETE BARRIER TRANSITION (TYPE 25 MODIFIED) 15 LF
07 - HASKELL AVENUE UC (BRIDGE NO. 53-2209)
CONCRETE BARRIER TRANSITION (TYPE 25 MODIFIED) 15 LF
08 - SEPULVEDA BLVD UC (BRIDGE NO. 53-2213)
CONCRETE BARRIER TRANSITION (TYPE 25 MODIFIED) 15 LF
09 - WB 118/SB 405 CONN (BRIDGE NO. 53-2213F)
CONCRETE BARRIER TRANSITION (TYPE 25 MODIFIED) 15 LF
10 - CHATSWORTH DR UC (BRIDGE NO. 53-2214)
CONCRETE BARRIER TRANSITION (TYPE 25 MODIFIED) 29 LF
13 - SHARP AVE UC (BRIDGE NO. 53-2242R)
CONCRETE BARRIER TRANSITION (TYPE 25 MODIFIED) 15 LF
14 - EB 118/SB 405 (BRIDGE NO. 53-2210G)
CONCRETE BARRIER TRANSITION (TYPE 25 MODIFIED) 15 LF
15 - WB 118/SB 405 CONN OC (BRIDGE NO. 53-2212F)
CONCRETE BARRIER TRANSITION (TYPE 25 MODIFIED) 44 LF
16 - SHARP AVE UC (BRIDGE NO. 53-2342L)
CONCRETE BARRIER TRANSITION (TYPE 25 MODIFIED) 29 LF
18 - EB 118/SB 5 CONN OC (BRIDGE NO. 53-2328G)
CONCRETE BARRIER TRANSITION (TYPE 25 MODIFIED) 29 LF
20 - LAUREL CANYON BLVD OC (BRIDGE NO. 53-2325K)
CONCRETE BARRIER TRANSITION (TYPE 25 MODIFIED) 29 LF
21 - WB 118/SB 5 (BRIDGE NO. 53-2327F)
THRIE BEAM CONNECTION (TYPE 25) 7 LF
22 - TELFAIR AVE UC (BRIDGE NO. 53-2337)
THRIE BEAM CONNECTION (TYPE 25) 4 LF
23 - LAUREL CANYON BLVD UC (BRIDGE NO. 53-2344R)
CONCRETE BARRIER TRANSITION (TYPE 25 MODIFIED) 29 LF
24 - LAUREL CANYON BLVD UC (BRIDGE NO. 53-2344L)
CONCRETE BARRIER TRANSITION (TYPE 25 MODIFIED) 15 LF
26 - PAXTON ST UC (BRIDGE NO. 53-2354S)
CONCRETE BARRIER TRANSITION (TYPE 25 MODIFIED) 15 LF
27 - BRADLEY AVE UC (BRIDGE NO. 53-2352)
CONCRETE BARRIER TRANSITION (TYPE 25 MODIFIED) 29 LF
28 - EB 118/WB 210 CONN (BRIDGE NO. 53-2120G)
CONCRETE BARRIER TRANSITION (TYPE 25 MODIFIED) 15 LF
29 - DRONFIELD AVE UC (BRIDGE NO. 53-2120)
CONCRETE BARRIER TRANSITION (TYPE 25 MODIFIED) 15 LF
30 - PAXTON FOOTHILL UC (BRIDGE NO. 53-2103G)
CONCRETE BARRIER TRANSITION (TYPE 25 MODIFIED) 29 LF

NOTE: NOT ALL QUANTITIES SHOWN, SEE "GENERAL PLAN NO. 1 TO 5" SHEETS.

	BY	CHECKED
DESIGN	Jeff B Duffin	Matt Schott
DETAILS	Suraj Dutta	Jeff B Duffin
QUANTITIES	Jeff B Duffin	Matt Schott

STATE OF CALIFORNIA
DEPARTMENT OF TRANSPORTATION

DIVISION OF ENGINEERING SERVICES
STRUCTURE DESIGN
DESIGN BRANCH 18

BRIDGE NO. VARIOUS
POST MILE VARIOUS

ROUTE 118 BRIDGE APPROACH AND DEPARTURE SLAB REPLACEMENT
CONCRETE BARRIER TRANSITION TABLES

STRUCTURES DESIGN DETAIL SHEET (ENGLISH) (REV. 09-01-10)

ORIGINAL SCALE IN INCHES FOR REDUCED PLANS 0 1 2 3

UNIT: 3603
PROJECT NUMBER & PHASE: 0713000486-1
CONTRACT NO.: 07-30210

DISREGARD PRINTS BEARING EARLIER REVISION DATES
REVISION DATES 11/18/14 10/07/15 05/17/16

SHEET 9 OF 13

FILE => 07-30210-t-tctt.dgn

USERNAME => s125624 DATE PLOTTED => 29-JUL-2016 TIME PLOTTED => 08:27

DIST	COUNTY	ROUTE	POST MILES TOTAL PROJECT	SHEET No.	TOTAL SHEETS
07	LA	27,118	18.6/20.1, R0.0/R14.4	309	312

Matthew Schott 05/06/16
REGISTERED CIVIL ENGINEER DATE

6-20-16
PLANS APPROVAL DATE

REGISTERED PROFESSIONAL ENGINEER Matthew Schott No. C77977 Exp. 06-30-17 CIVIL STATE OF CALIFORNIA

The State of California or its officers or agents shall not be responsible for the accuracy or completeness of scanned copies of this plan sheet.

LEGEND:
- -·-·- Indicates existing structure
- ——— Indicates new construction

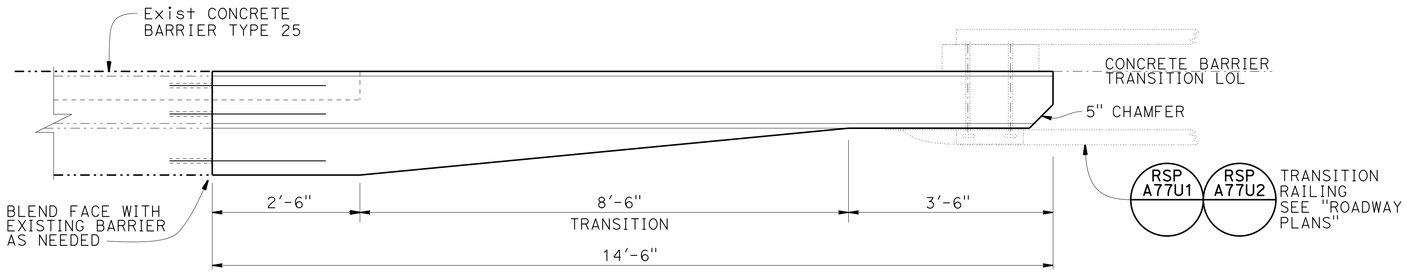

PLAN
3/4" = 1'-0"

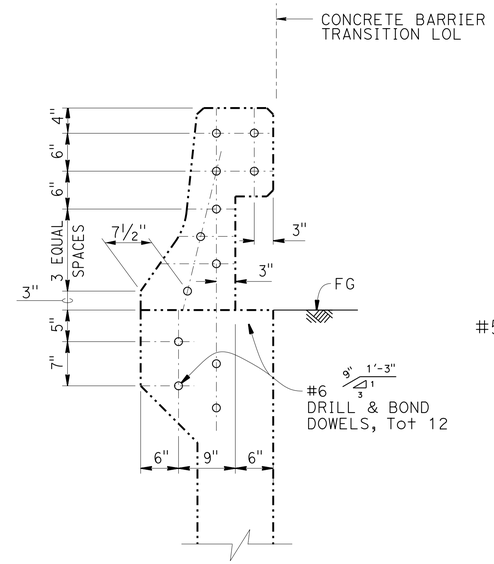

SECTION A-A
1" = 1'-0"

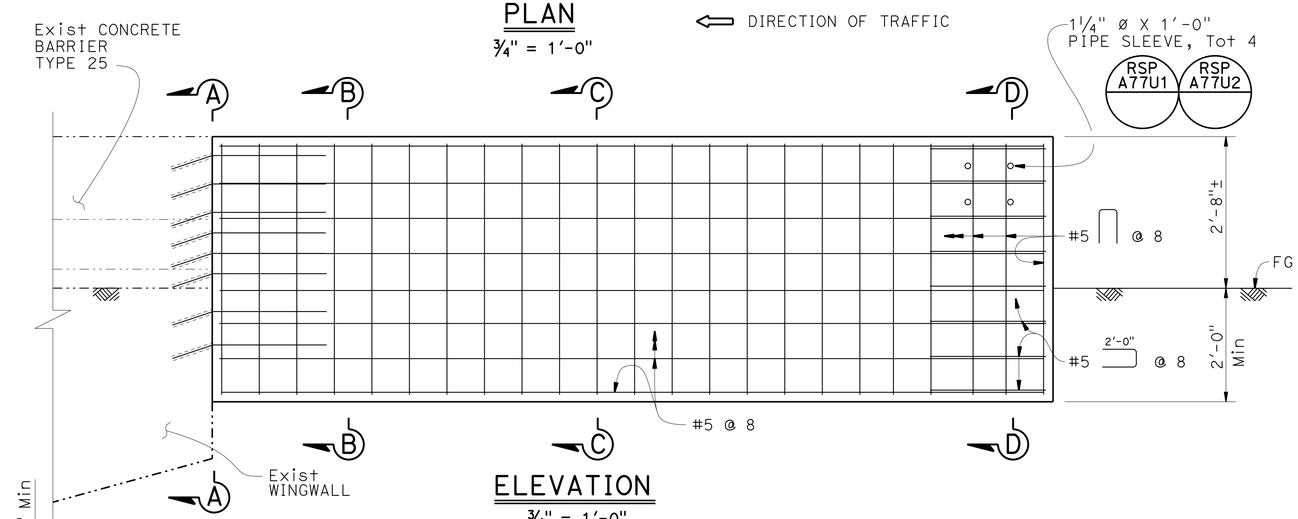

ELEVATION
3/4" = 1'-0"

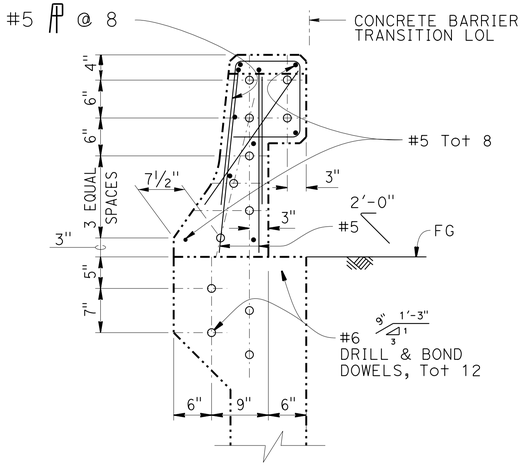

SECTION E-E
1" = 1'-0"

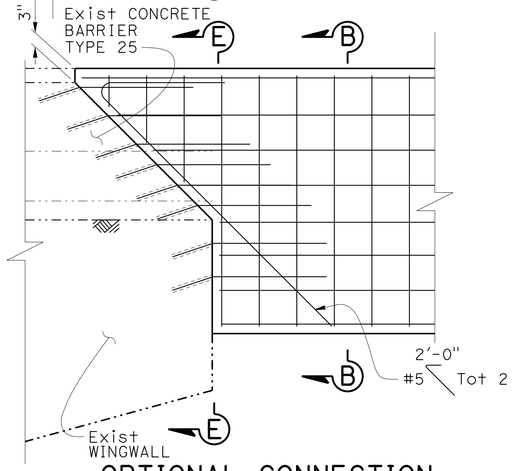

OPTIONAL CONNECTION
NO SCALE

NOTE: FOR USE AT LOCATIONS WHERE THE EXISTING BARRIER DOES NOT HAVE A VERTICAL FACE.

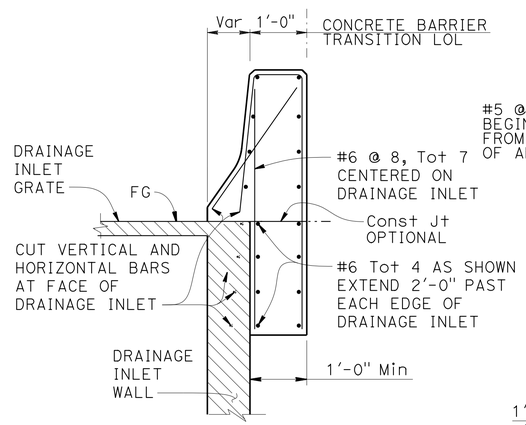

DETAIL A
NO SCALE

NOTE: To be used in locations where drainage inlets are in conflict with the barrier transition.

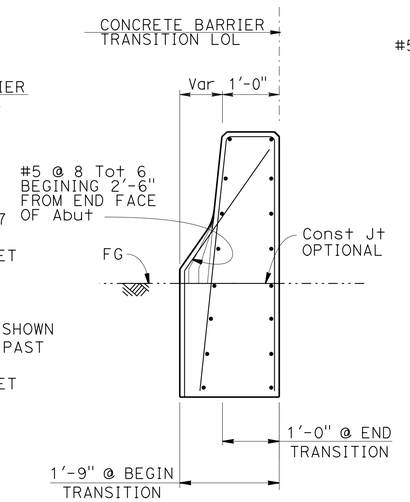

SECTION C-C
3/4" = 1'-0"

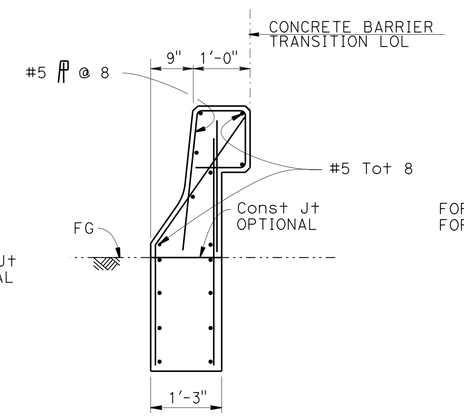

SECTION B-B
3/4" = 1'-0"

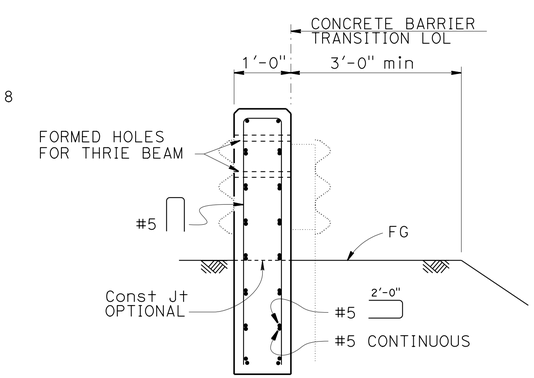

SECTION D-D
3/4" = 1'-0"

NOTES:
1. See "CONCRETE BARRIER TRANSITION TABLES" sheet and "Roadway Plans" for work locations.
2. Holes used for fastening existing MBGR must be mortar filled, unless holes were cast using pipe sleeves.
3. Existing barrier heights vary. Where existing barrier height is more than 2'-8", transition barrier height to 2'-8" @ 4:1 slope.
4. Minimum 2" cover

NOTE:
THE CONTRACTOR MUST VERIFY ALL CONTROLLING FIELD DIMENSIONS BEFORE ORDERING OR FABRICATING ANY MATERIAL.

	BY	CHECKED
DESIGN	Jeff B Duffin	Matt Schott
DETAILS	Suraj Dutta	Jeff B Duffin
QUANTITIES	Jeff B Duffin	Matt Schott

STATE OF CALIFORNIA
DEPARTMENT OF TRANSPORTATION

DIVISION OF ENGINEERING SERVICES
STRUCTURE DESIGN
DESIGN BRANCH 18

BRIDGE NO. VARIOUS
POST MILE VARIOUS

ROUTE 118 BRIDGE APPROACH AND DEPARTURE SLAB REPLACEMENT
CONCRETE BARRIER (TRANSITION) TYPE 25 (MOD)

STRUCTURES DESIGN DETAIL SHEET (ENGLISH) (REV. 09-01-10)

ORIGINAL SCALE IN INCHES FOR REDUCED PLANS 0 1 2 3

UNIT: 3603
PROJECT NUMBER & PHASE: 0713000486-1
CONTRACT NO.: 07-30210

DISREGARD PRINTS BEARING EARLIER REVISION DATES
REVISION DATES 11/18/14 10/07/15 05/05/16

SHEET 10 OF 13

FILE => 07-30210-u-cb_t25.dgn

USERNAME => s125624 DATE PLOTTED => 27-JUL-2016 TIME PLOTTED => 10:14

DIST	COUNTY	ROUTE	POST MILES TOTAL PROJECT	SHEET No.	TOTAL SHEETS
07	LA	27,118	18.6/20.1, R0.0/R14.4	310	312

REGISTERED CIVIL ENGINEER 05/06/16 DATE

6-20-16
PLANS APPROVAL DATE

REGISTERED PROFESSIONAL ENGINEER Matthew Schott No. C77977 Exp. 06-30-17 CIVIL STATE OF CALIFORNIA

The State of California or its officers or agents shall not be responsible for the accuracy or completeness of electronic copies of this plan sheet.

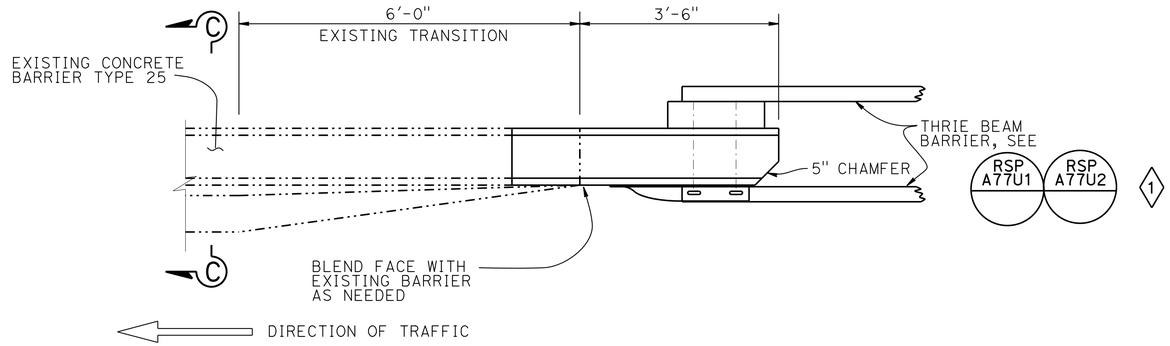

PLAN
3/4" = 1'-0"

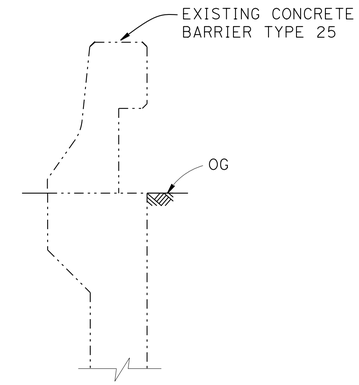

SECTION C-C
3/4" = 1'-0"

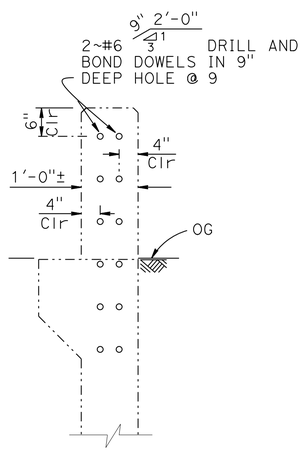

SECTION A-A
3/4" = 1'-0"

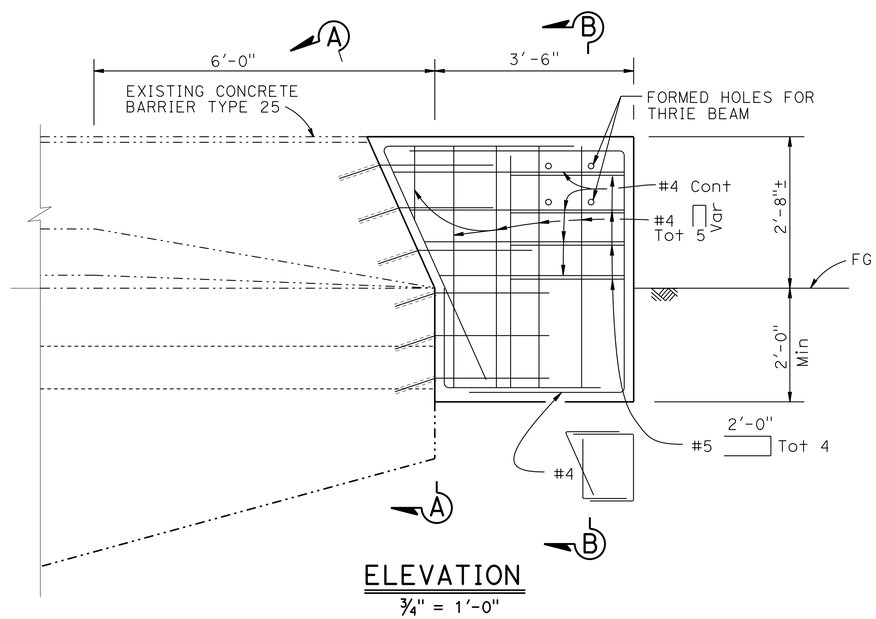

ELEVATION
3/4" = 1'-0"

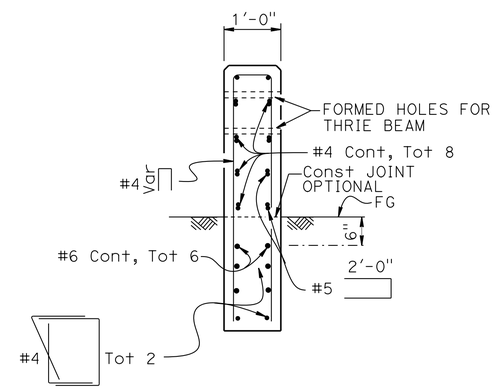

NOTE:
Thrie Beam not shown

SECTION B-B
3/4" = 1'-0"

LEGEND:

-·-·-·- Indicates Existing Structure

——— Indicates New Construction

NOTE:
THE CONTRACTOR MUST VERIFY ALL CONTROLLING FIELD DIMENSIONS BEFORE ORDERING OR FABRICATING ANY MATERIAL.

SPECIAL DETAILS

STANDARD DRAWING

FILE NO. xs16-010

APPROVAL DATE July 2014

1 UPDATED STANDARD PLAN CALLOUTS

STATE OF CALIFORNIA DEPARTMENT OF TRANSPORTATION

DIVISION OF ENGINEERING SERVICES

BRIDGE NO. VARIOUS

POST MILE VARIOUS

ROUTE 118 BRIDGE APPROACH AND DEPARTURE SLAB REPLACEMENT

THRIE BEAM CONNECTION - TYPE 25

DS OSD 2147A (ENGLISH STANDARD DRAWING "XS" BORDER REV. (02-02-11)

ORIGINAL SCALE IN INCHES FOR REDUCED PLANS 0 1 2 3

UNIT: 3603
PROJECT NUMBER & PHASE: 0713000486-1
CONTRACT NO.: 07-30210

DISREGARD PRINTS BEARING EARLIER REVISION DATES

REVISION DATES 7-18-14 10/09/15 05/05/16

SHEET 11 OF 13

FILE => 07-30210-v-tbc1_typ25.dgn

USERNAME => s125624 DATE PLOTTED => 27-JUL-2016 TIME PLOTTED => 10:14

DIST	COUNTY	ROUTE	POST MILES TOTAL PROJECT	SHEET No.	TOTAL SHEETS
07	LA	27,118	18.6/20.1, R0.0/R14.4	311	312

Matthew Schott 05/06/16
REGISTERED CIVIL ENGINEER DATE

6-20-16
PLANS APPROVAL DATE

REGISTERED PROFESSIONAL ENGINEER
Matthew Schott
No. C77977
Exp. 06-30-17
CIVIL
STATE OF CALIFORNIA

The State of California or its officers or agents shall not be responsible for the accuracy or completeness of electronic copies of this plan sheet.

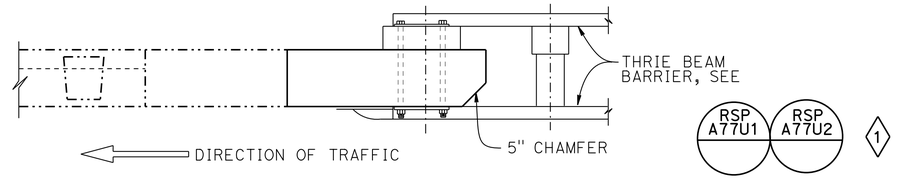

PLAN
3/4" = 1'-0"

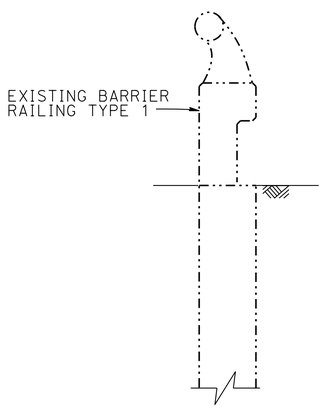

SECTION A-A
3/4" = 1'-0"

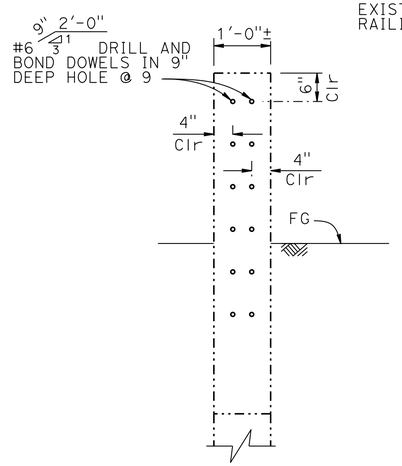

SECTION B-B
3/4" = 1'-0"

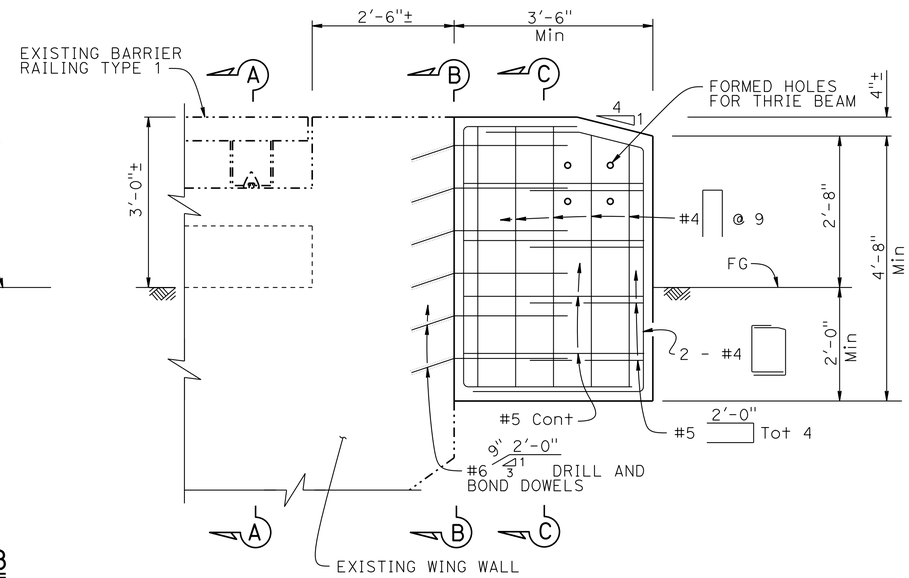

ELEVATION
3/4" = 1'-0"

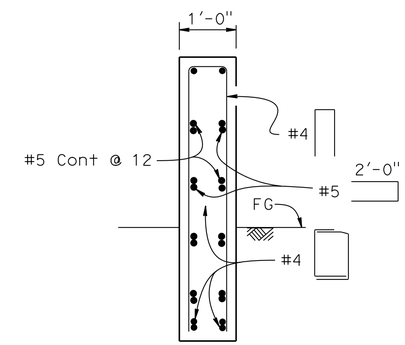

NOTE:
Drill and bond dowels not shown

SECTION C-C
3/4" = 1'-0"

NOTE:
Cut and remove portion of Type 1 and BAGR as required

LEGEND:
····—····— Indicates Existing Structure
_____ Indicates New Structure

NOTE:
THE CONTRACTOR MUST VERIFY ALL CONTROLLING FIELD DIMENSIONS BEFORE ORDERING OR FABRICATING ANY MATERIAL.

SPECIAL DETAILS

STANDARD DRAWING
FILE NO. xs16-025
APPROVAL DATE July 2014

1 UPDATED STANDARD PLAN CALLOUTS

STATE OF CALIFORNIA
DEPARTMENT OF TRANSPORTATION

DIVISION OF ENGINEERING SERVICES

BRIDGE NO. VARIOUS
POST MILE VARIOUS

ROUTE 118 BRIDGE APPROACH AND DEPARTURE SLAB REPLACEMENT
THRIE BEAM CONNECTION - TYPE 1

DS OSD 2147A (ENGLISH STANDARD DRAWING "XS" BORDER REV. (02-02-11)

ORIGINAL SCALE IN INCHES FOR REDUCED PLANS 0 1 2 3

UNIT: 3603
PROJECT NUMBER & PHASE: 0713000486-1
CONTRACT NO.: 07-30210

DISREGARD PRINTS BEARING EARLIER REVISION DATES
REVISION DATES 6-30-14 10-07-15 05/05/16
SHEET 12 OF 13

FILE => 07-30210-v-tbc2_typ1.dgn

USERNAME => s125624 DATE PLOTTED => 27-JUL-2016 TIME PLOTTED => 10:14

DIST	COUNTY	ROUTE	POST MILES TOTAL PROJECT	SHEET No.	TOTAL SHEETS
07	LA	27,118	18.6/20.1, R0.0/R14.4	312	312

REGISTERED CIVIL ENGINEER — DATE 05/06/16

6-20-16
PLANS APPROVAL DATE

The State of California or its officers or agents shall not be responsible for the accuracy or completeness of electronic copies of this plan sheet.

REGISTERED PROFESSIONAL ENGINEER — Matthew Schott No. C77977 Exp. 06-30-17 CIVIL — STATE OF CALIFORNIA

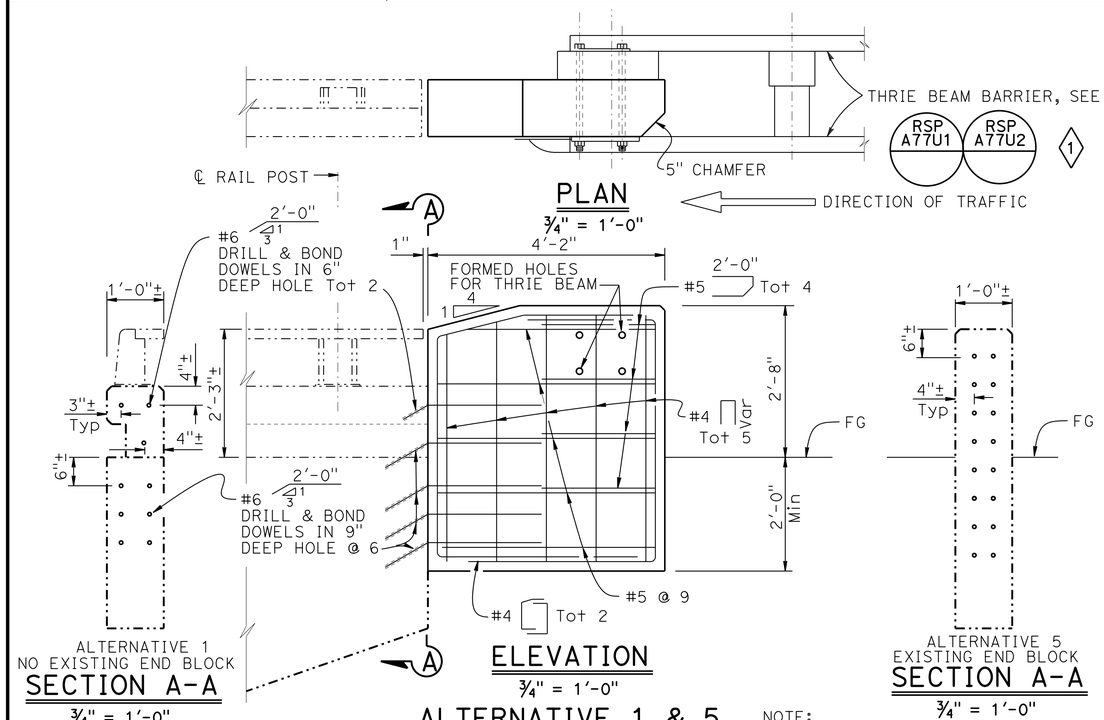

NOTE:
Alternative 1 shown (No Existing End Block), Alternative 5 similar (Existing End Block)

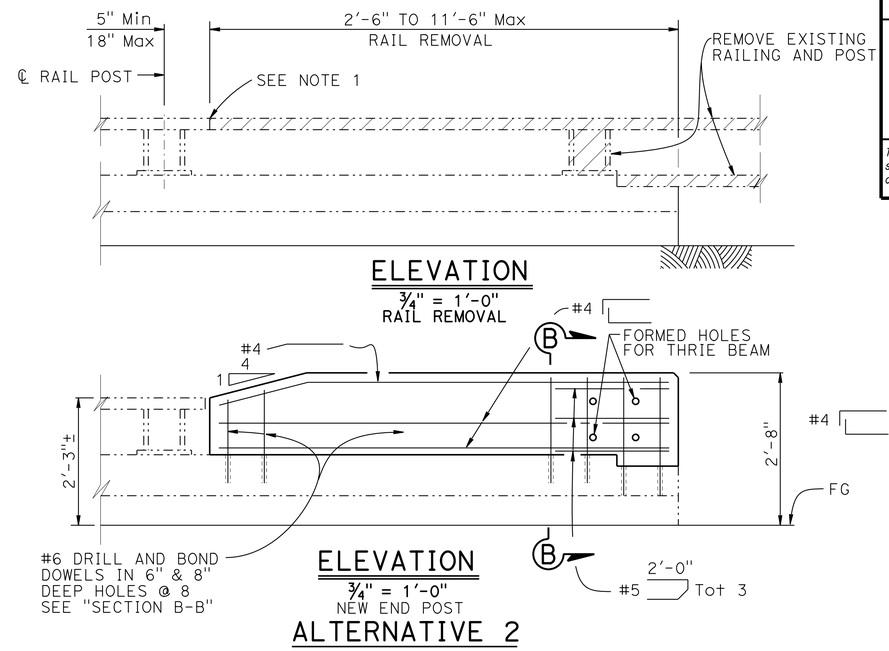

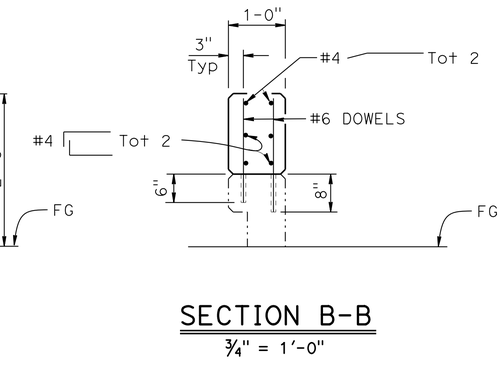

LEGEND:

-·-·-·- Indicates Existing Stucture

——— Indicates New Structure

NOTE:

1. Cut and remove Type 9 and BAGR as required

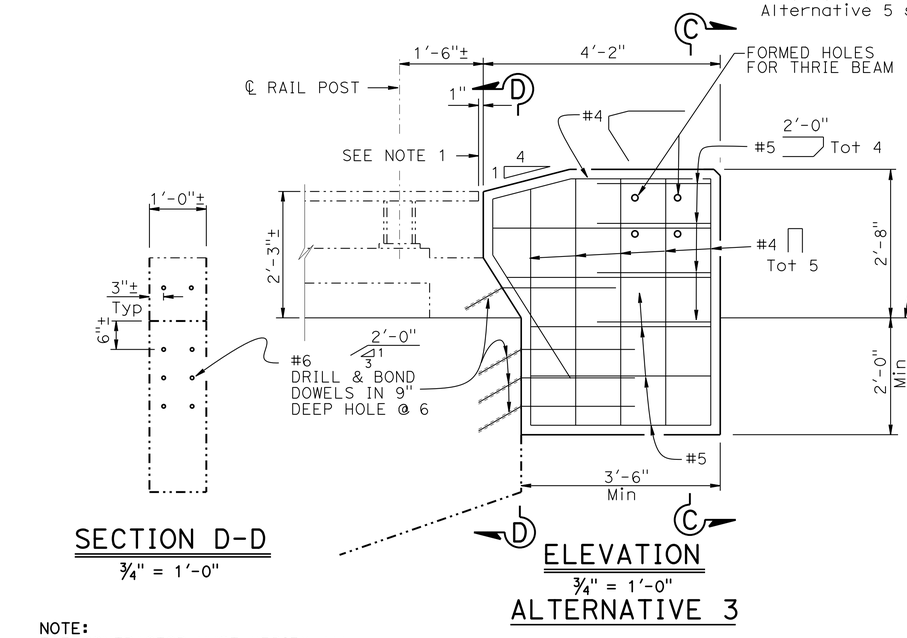

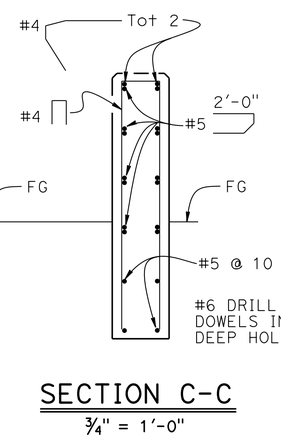

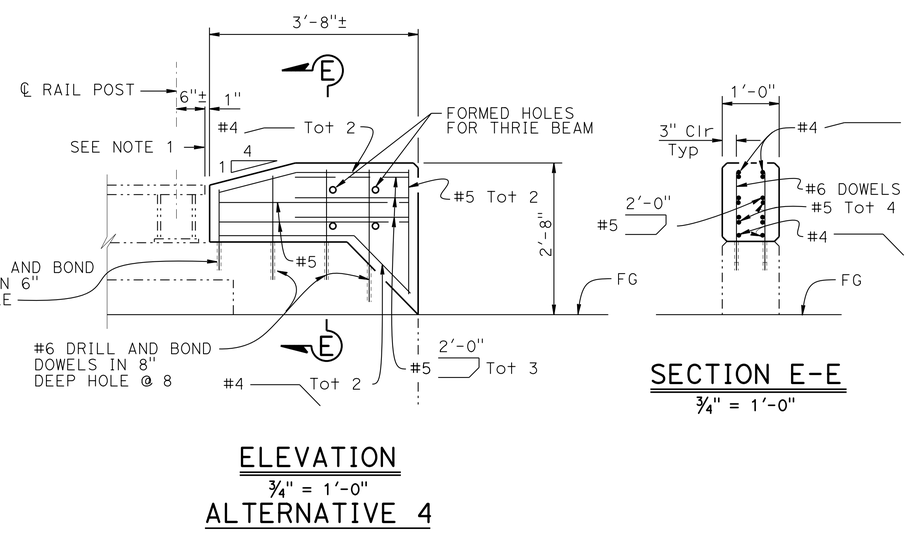

NOTE:
THE CONTRACTOR MUST VERIFY ALL CONTROLLING FIELD DIMENSIONS BEFORE ORDERING OR FABRICATING ANY MATERIAL.

SPECIAL DETAILS

STANDARD DRAWING

FILE NO. xs16-030 — APPROVAL DATE July 2014

1 UPDATED STANDARD PLAN CALLOUTS

STATE OF CALIFORNIA DEPARTMENT OF TRANSPORTATION

DIVISION OF ENGINEERING SERVICES

BRIDGE NO. VARIOUS — POST MILE VARIOUS

ROUTE 118 BRIDGE APPROACH AND DEPARTURE SLAB REPLACEMENT

THRIE BEAM CONNECTION - TYPE 9

DS OSD 2147A (ENGLISH STANDARD DRAWING "XS" BORDER REV. (02-02-11)

ORIGINAL SCALE IN INCHES FOR REDUCED PLANS 0 1 2 3

UNIT: 3603
PROJECT NUMBER & PHASE: 0713000486-1
CONTRACT NO.: 07-30210

DISREGARD PRINTS BEARING EARLIER REVISION DATES — REVISION DATES 6-30-14 10/07/15 05/05/16 — SHEET 13 OF 13

FILE => 07-30210-v-tbc3_typ9.dgn

USERNAME => s125624 DATE PLOTTED => 27-JUL-2016 TIME PLOTTED => 10:14